RW106-1

P.I. STA 21+84.99
Δ = 5° 41′ 10.23" (LT)
T = 284.99
L = 569.51
R = 5738.58
P.C. STA 19+00.00
P.T. STA 24+69.51
TANGENT BRG @ PC = S 19° 19′ 46.91" W
TANGENT BRG @ PT = S 13° 38′ 36.69" W

RW106-2

P.I. STA 25+05.90
Δ = 0° 23′ 03.07" (LT)
T = 36.39
L = 72.77
R = 10853.00
P.C. STA 24+69.51
P.T. STA 25+42.28
TANGENT BRG @ PC = S 13° 38′ 36.69" W
TANGENT BRG @ PT = S 13° 15′ 33.61" W

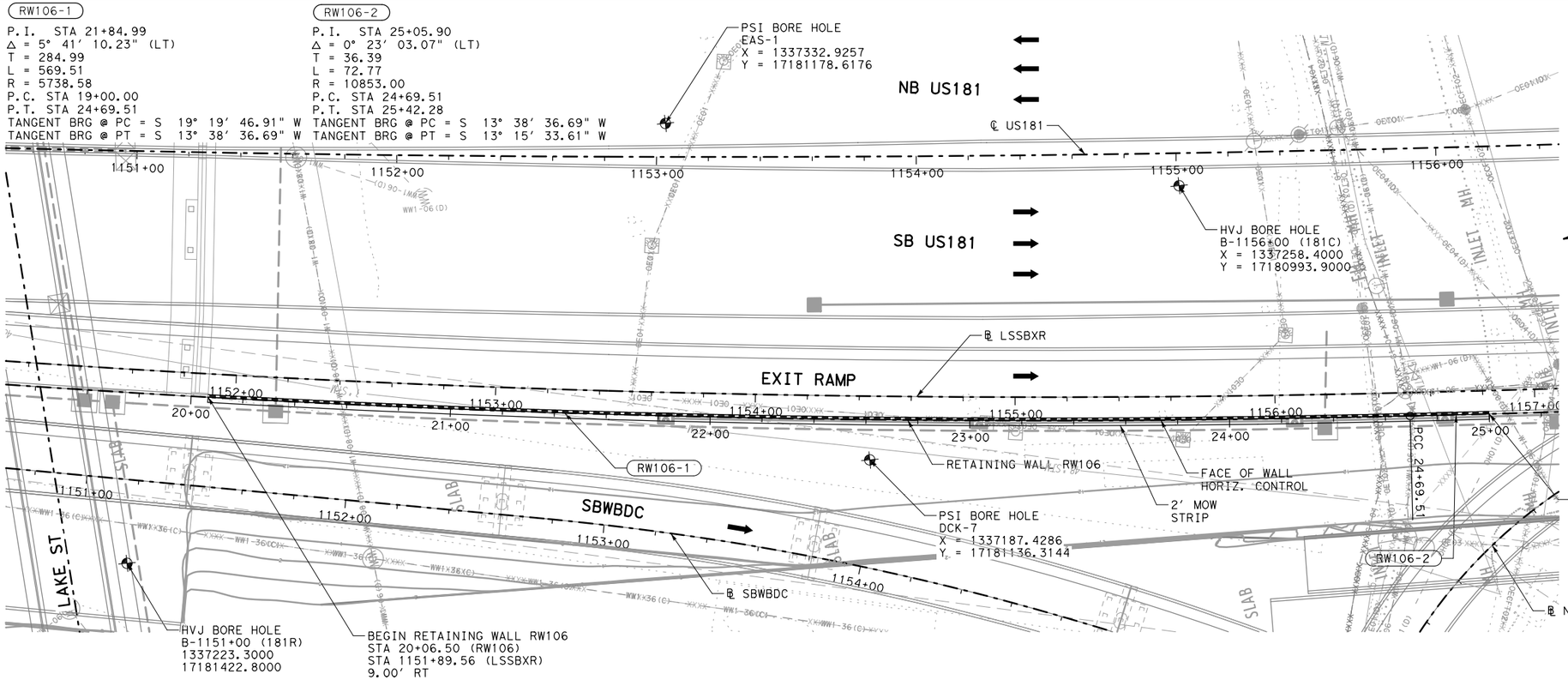

LEGEND

- PROPOSED TRAFFIC
- PROPOSED RETAINING WALL
- RWXXX-1 HORIZONTAL CURVE
- BORE LOCATION
- TEMPORARY SPL SHORING

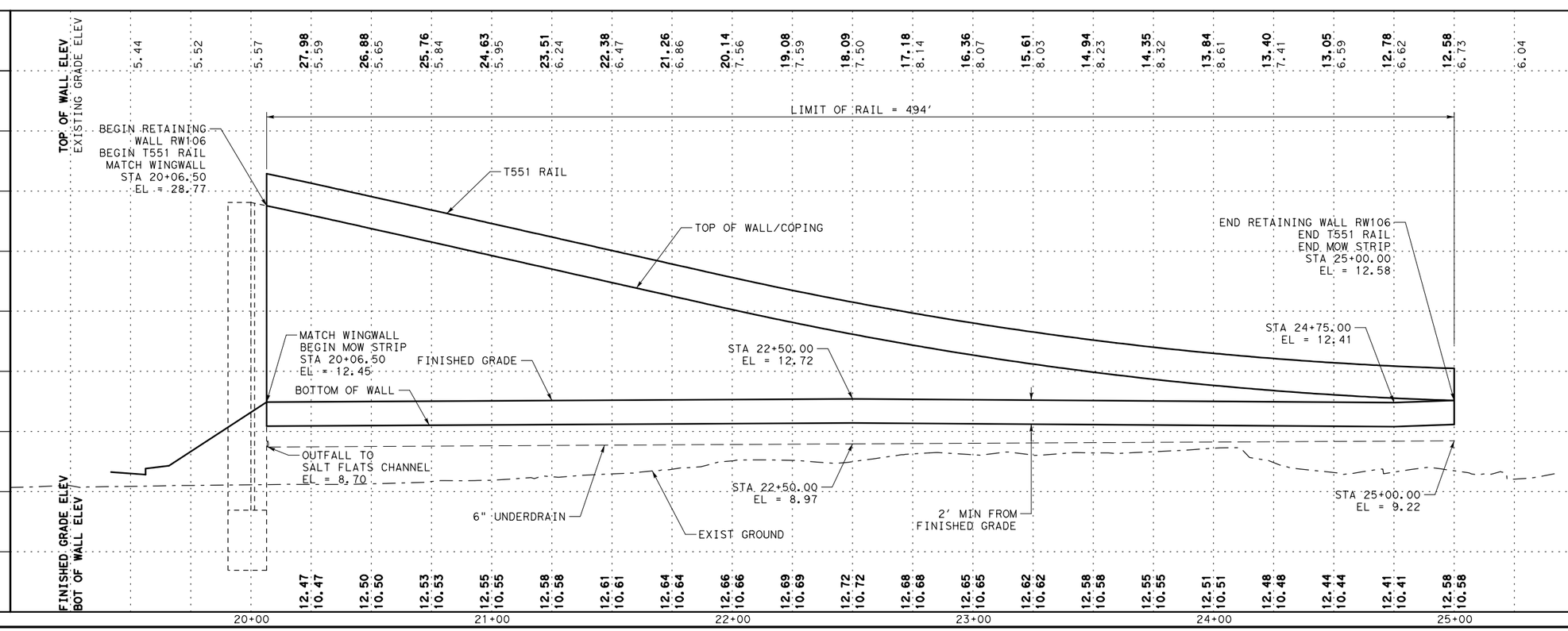

NO.	REVISIONS	BY	DATE

PRELIMINARY
FOR REVIEW ONLY
THESE DOCUMENTS ARE PRELIMINARY AND SUBJECT TO CHANGE. THEY ARE NOT INTENDED FOR CONSTRUCTION OR BIDDING. THEY WERE PREPARED BY, OR UNDER THE SUPERVISION OF:
Engineer: JEFFREY E. WESANEN
P.E. No.: 117522
Date: 5/11/2017

PREFINAL SUBMITTAL

NOT FOR CONSTRUCTION

US 181 HARBOR BRIDGE

RETAINING WALL LAYOUT RW106 (PACKAGE 4.0.01)

SCALE: 1"=50′ H
1"=10′ V

FLATIRON/DRAGADOS LLC

Stantec
Engineered by Stantec Consulting Services Inc.
Texas Registered Engineering Firm F-6324

Texas Department of Transportation
© 2017

SHEET 1 OF 1

FED. RD. DIV. NO.	FEDERAL AID PROJECT NO.		SHEET NO.
6	HP X597(1)		RTWL 001
STATE	STATE DIST. NO.	COUNTY	
TEXAS	CRP	NUECES	
CONT.	SECT	JOB	HIGHWAY NO.
0101	06	095	US181

PROJECT
US 181 HARBOR BRIDGE

Checked by: Date:
Back-Checked by: Date:
Corrected by: Date:
Verified by: Date:

REVIEW PHASE
☐ Detail Check ☐ Internal Review ☐ Design Review ☐ TxDOT
☐ Drawing ☐ Report ☐ Other:
Prepared By: Date:
☐ Drawing Checked Against Calculations ☐ Calculations Check Confirmed

Plotted: 5/11/2017 5:12:54 PM
Pen Table: HBR_RTWL.tbl
Design File: pw:\\stantec-sc-pw.bentley.com:stantec-sc-pw\Documents\01 Projects\HBR\Build Work\Design\07-Walls\07.01-Sheets\HBR_RET_RW106_PP01.dgn

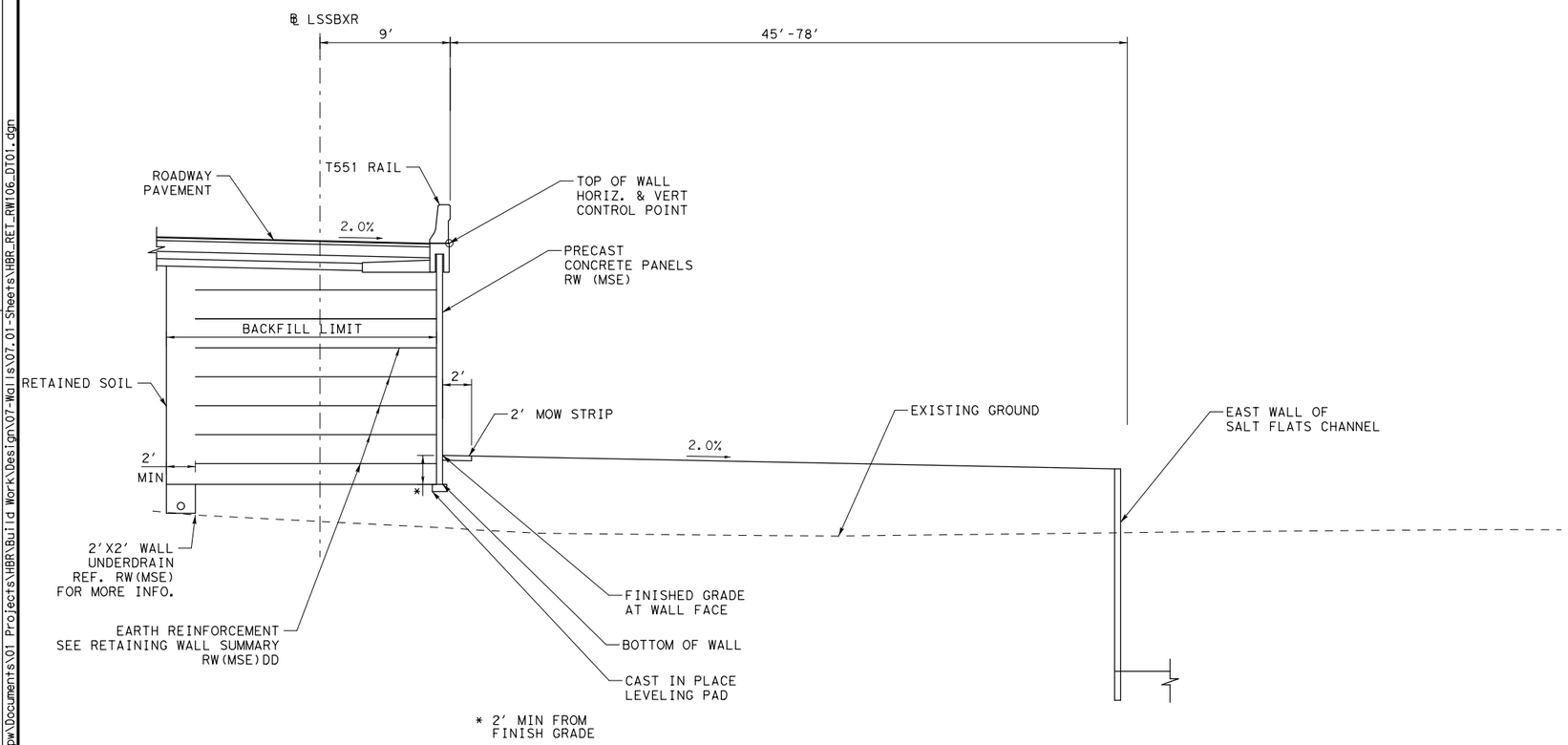

RW106 SECTION

STA 20+06.50 TO STA 25+00.00

NOTES:

1. SEE ROADWAY, BRIDGE, DRAINAGE, LIGHTING, AND BORING LOG SHEETS FOR ADDITIONAL INFORMATION.
2. REFER TO APPROVED AESTHETICS PLAN FOR AESTHETIC TREATMENT, LAYOUT, AND SURFACE FINISHES FOR WALL PANELS, COPING, RAIL, AND RIPRAP.
3. REFER TO TXDOT STANDARD RW(MSE), RW(TRF), AND RW(MSE)DD FOR ADDITIONAL INFORMATION. EMBANKMENT EARTH REINFORCEMENTS SHALL HAVE A MINIMUM LENGTH EQUAL TO OR GREATER THAN THE REQUIREMENTS SHOWN IN RW(MSE)DD.
4. WALL MANUFACTURER MAY ADJUST AND SHALL ACCOMMODATE ANY INLETS POSITIONED WITHIN THE REINFORCING ZONE OF THE MSE WALL. ADJUSTMENTS SHALL BE SHOWN IN THE SHOP DRAWINGS.
5. PROVIDE POSITIVE DRAINAGE DURING CONSTRUCTION AND POST CONSTRUCTION PERIOD.
6. SQUARE FOOT SURFACE AREA OF RETAINING WALL IS MEASURED FROM TOP OF WALL TO BOTTOM OF WALL UNLESS NOTED OTHERWISE.
7. THE UTILITY INFORMATION SHOWN IS NOT GUARANTEED TO BE ACCURATE OR ALL INCLUSIVE. CONTRACTOR SHALL VERIFY THE LOCATIONS OF ALL UTILITIES PRIOR TO CONSTRUCTION. THE CONTRACTOR IS RESPONSIBLE FOR ALL DAMAGES TO UTILITIES CAUSED BY CONSTRUCTION OPERATIONS.
8. NO CONSTRUCTION SHALL BEGIN UNTIL ALL REFERENCED SHEETS ARE APPROVED FOR CONSTRUCTION.

RW106 ESTIMATED QUANTITES

ITEM	DESC	DESCRIPTION	QUANT.	UNITS
423	6001	RETAINING WALL (MSE)	4144	SF
432	6045	RIPRAP (MOW STRIP) (4IN)	13	CY
450	6014	RAIL (TY T551)	494	LF

NO.	REVISIONS	BY	DATE

PRELIMINARY
FOR REVIEW ONLY
THESE DOCUMENTS ARE PRELIMINARY AND SUBJECT TO CHANGE. THEY ARE NOT INTENDED FOR CONSTRUCTION OR BIDDING. THEY WERE PREPARED BY, OR UNDER THE SUPERVISION OF:
Engineer: JEFFREY E. WESANEN
P.E. No.: 117522
Date: 5/11/2017

PREFINAL SUBMITTAL
NOT FOR CONSTRUCTION

US 181 HARBOR BRIDGE

RETAINING WALL SECTION & DETAILS RW106 (PACKAGE 4.0.01)

SCALE: 1"=10′

FLATIRON/DRAGADOS LLC

Stantec
Engineered by Stantec Consulting Services Inc.
Texas Registered Engineering Firm F-6324

Texas Department of Transportation
© 2017
SHEET 1 OF 1

FED. RD. DIV. NO.	FEDERAL AID PROJECT NO.		SHEET NO.
6	HP X597(1)		RTWL 002
STATE	STATE DIST. NO.	COUNTY	
TEXAS	CRP	NUECES	
CONT.	SECT	JOB	HIGHWAY NO.
0101	06	095	US181

PROJECT
US 181 HARBOR BRIDGE

Checked by: Date:
Back-Checked by: Date:
Corrected by: Date:
Verified by: Date:

☐ Detail Check ☐ Internal Review ☐ Design Review ☐ TxDOT
☐ Drawing ☐ Report ☐ Other:
Prepared By: Date:
☐ Drawing Checked Against Calculations ☐ Calculations Check Confirmed
REVIEW PHASE

Plotted: 5/11/2017 5:13:07 PM
Pen Table: HBR_RTWL.tbl
Design File: pw:\\stantec-sc-pw.bentley.com:stantec-sc-pw\Documents\01 Projects\HBR\Build Work\Design\07-Walls\07.01-Sheets\HBR_RET_RW106_DT01.dgn

RW107-1

P.I. STA 23+64.80
Δ = 9° 32′ 15.27″ (RT)
T = 190.21
L = 379.53
R = 2280.00
P.C. STA 21+74.59
P.T. STA 25+54.12
TANGENT BRG @ PC = N 8° 30′ 21.54″ E
TANGENT BRG @ PT = N 18° 02′ 36.81″ E

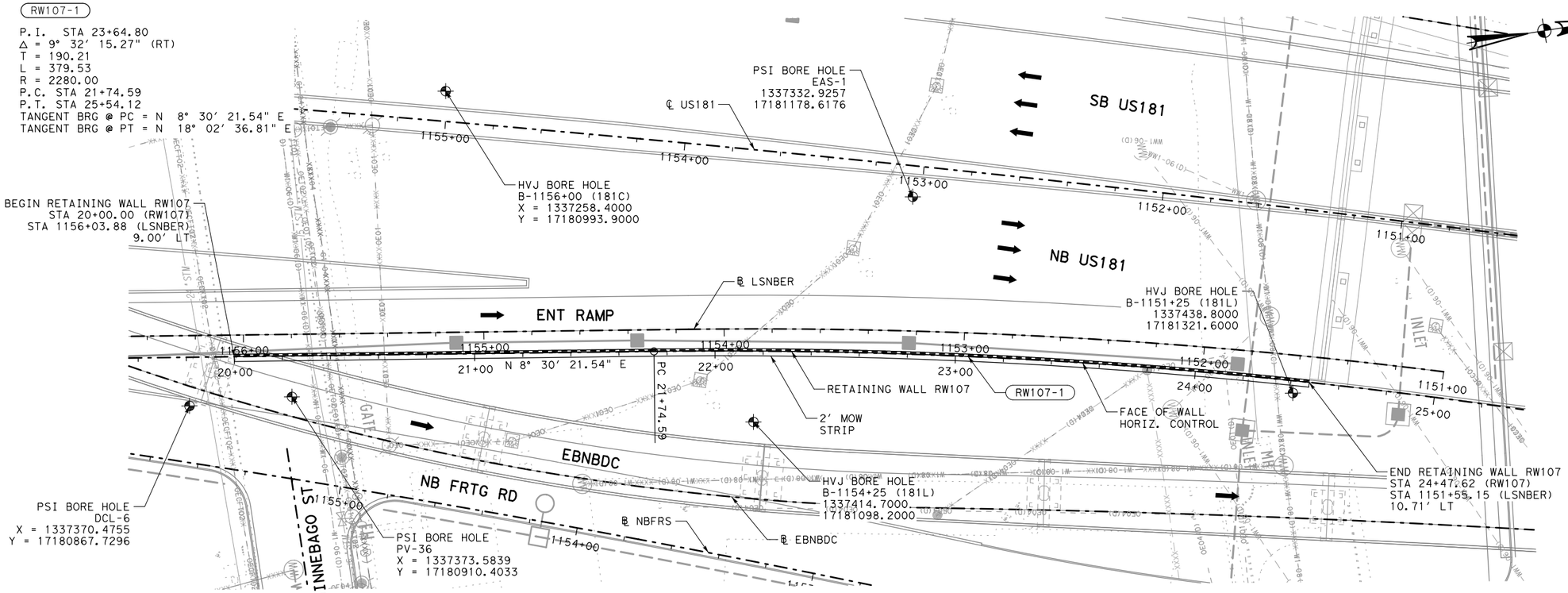

LEGEND

- PROPOSED TRAFFIC
- PROPOSED RETAINING WALL
- RWXXX-1 HORIZONTAL CURVE
- BORE LOCATION
- TEMPORARY SPL SHORING

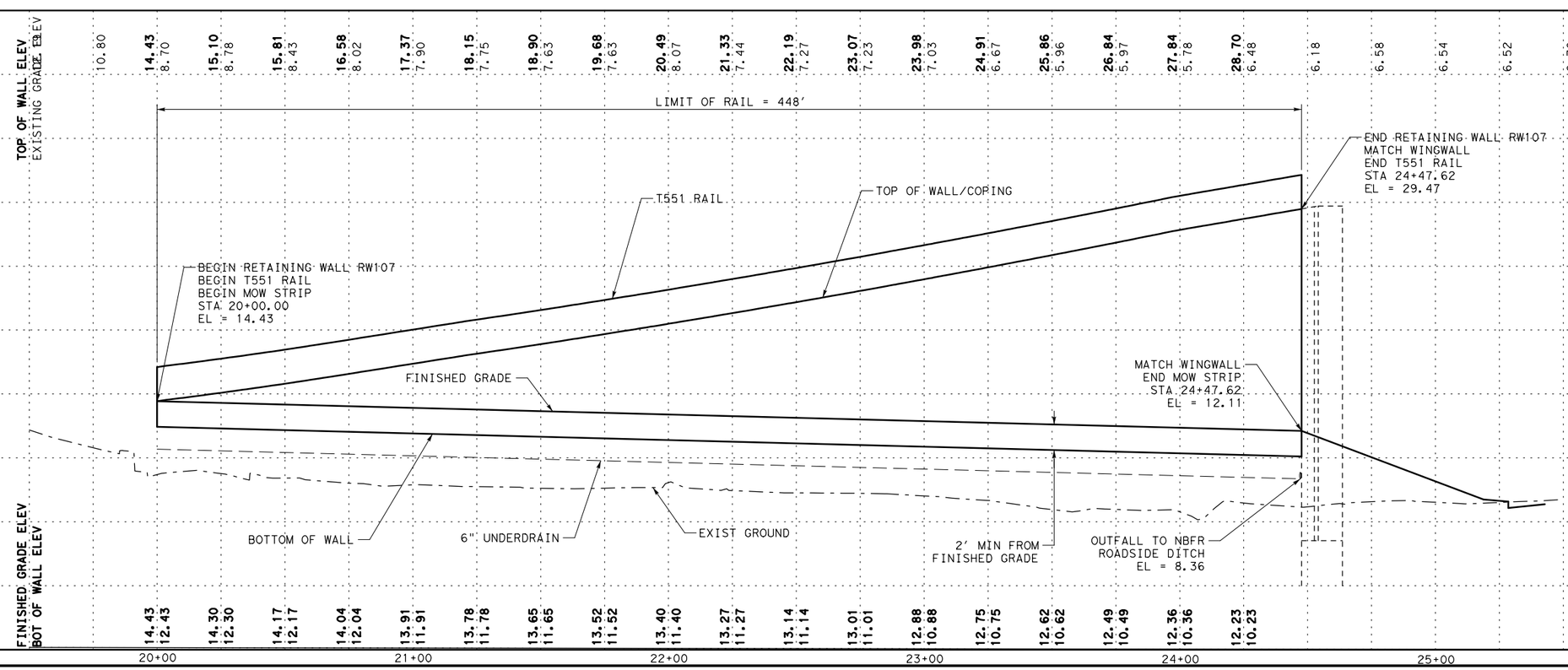

NO.	REVISIONS	BY	DATE

PRELIMINARY
FOR REVIEW ONLY
THESE DOCUMENTS ARE PRELIMINARY AND SUBJECT TO CHANGE. THEY ARE NOT INTENDED FOR CONSTRUCTION OR BIDDING. THEY WERE PREPARED BY, OR UNDER THE SUPERVISION OF:
Engineer: JEFFREY E. WESANEN
P.E. No.: 117522
Date: 5/11/2017

PREFINAL SUBMITTAL

NOT FOR CONSTRUCTION

US 181 HARBOR BRIDGE

RETAINING WALL LAYOUT RW107 (PACKAGE 4.0.01)

SCALE: 1"=50′ H
1"=10′ V

FLATIRON/DRAGADOS LLC

Stantec
Engineered by Stantec Consulting Services Inc.
Texas Registered Engineering Firm F-6324

Texas Department of Transportation
© 2017

FED. RD. DIV. NO.	FEDERAL AID PROJECT NO.		SHEET NO.
6	HP X597(1)		RTWL 003
STATE	STATE DIST. NO.	COUNTY	
TEXAS	CRP	NUECES	
CONT.	SECT	JOB	HIGHWAY NO.
0101	06	095	US181

SHEET 1 OF 1

PROJECT
US 181 HARBOR BRIDGE

Checked by: Date:
Back-Checked by: Date:
Corrected by: Date:
Verified by: Date:

REVIEW PHASE
☐ Detail Check ☐ Internal Review ☐ Design Review ☐ TxDOT
☐ Drawing ☐ Report ☐ Other:
Prepared By: Date:
☐ Drawing Checked Against Calculations ☐ Calculations Check Confirmed

Plotted: 5/11/2017 5:13:15 PM
Pen Table: HBR_RTWL.tbl
Design File: pw:\\stantec-sc-pw.bentley.com:stantec-sc-pw\Documents\01 Projects\HBR\Bild Work\Design\07-Walls\07.01-Sheets\HBR_RET_RW107_PP01.dgn

NOTES:

1. SEE ROADWAY, BRIDGE, DRAINAGE, LIGHTING, AND BORING LOG SHEETS FOR ADDITIONAL INFORMATION.
2. REFER TO APPROVED AESTHETICS PLAN FOR AESTHETIC TREATMENT, LAYOUT, AND SURFACE FINISHES FOR WALL PANELS, COPING, RAIL, AND RIPRAP.
3. REFER TO TXDOT STANDARD RW(MSE), RW(TRF), AND RW(MSE)DD FOR ADDITIONAL INFORMATION. EMBANKMENT EARTH REINFORCEMENTS SHALL HAVE A MINIMUM LENGTH EQUAL TO OR GREATER THAN THE REQUIREMENTS SHOWN IN RW(MSE)DD.
4. WALL MANUFACTURER MAY ADJUST AND SHALL ACCOMMODATE ANY INLETS POSITIONED WITHIN THE REINFORCING ZONE OF THE MSE WALL. ADJUSTMENTS SHALL BE SHOWN IN THE SHOP DRAWINGS.
5. PROVIDE POSITIVE DRAINAGE DURING CONSTRUCTION AND POST CONSTRUCTION PERIOD.
6. SQUARE FOOT SURFACE AREA OF RETAINING WALL IS MEASURED FROM TOP OF WALL TO BOTTOM OF WALL UNLESS NOTED OTHERWISE.
7. THE UTILITY INFORMATION SHOWN IS NOT GUARANTEED TO BE ACCURATE OR ALL INCLUSIVE. CONTRACTOR SHALL VERIFY THE LOCATIONS OF ALL UTILITIES PRIOR TO CONSTRUCTION. THE CONTRACTOR IS RESPONSIBLE FOR ALL DAMAGES TO UTILITIES CAUSED BY CONSTRUCTION OPERATIONS.
8. NO CONSTRUCTION SHALL BEGIN UNTIL ALL REFERENCED SHEETS ARE APPROVED FOR CONSTRUCTION.

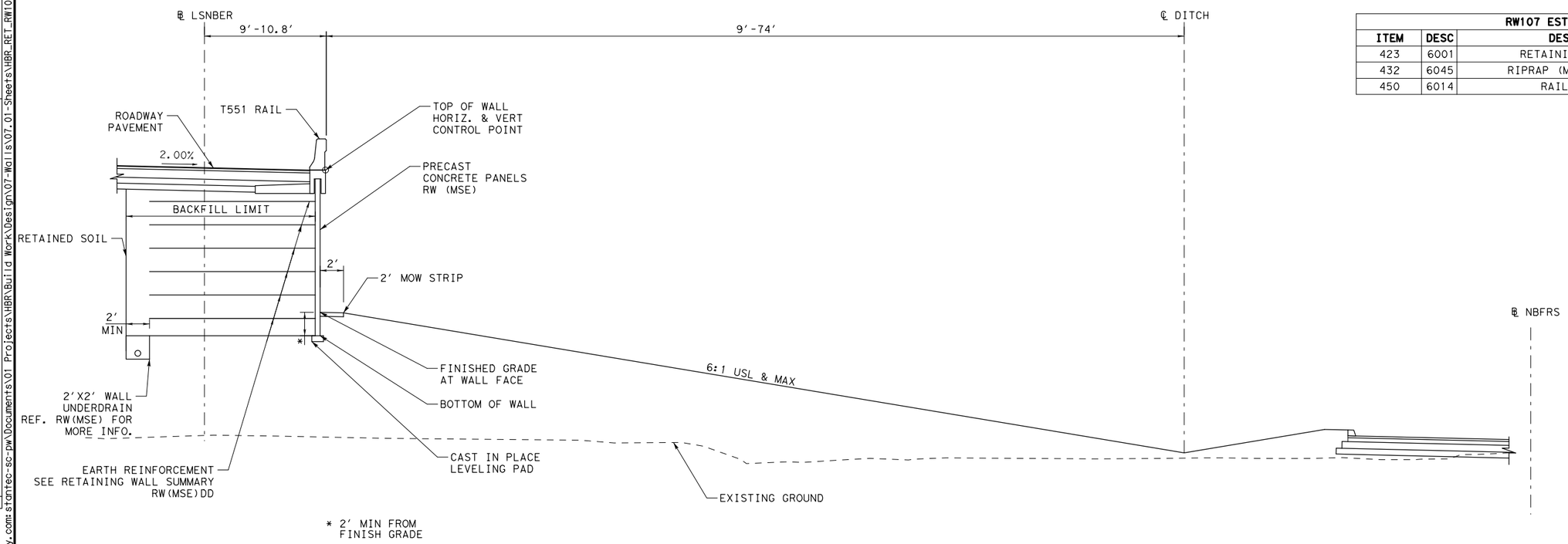

RW107 SECTION

STA 20+00.00 TO STA 24+47.62

RW107 ESTIMATED QUANTITES

ITEM	DESC	DESCRIPTION	QUANT.	UNITS
423	6001	RETAINING WALL (MSE)	4603	SF
432	6045	RIPRAP (MOW STRIP) (4IN)	12	CY
450	6014	RAIL (TY T551)	448	LF

NO.	REVISIONS	BY	DATE

PRELIMINARY
FOR REVIEW ONLY
THESE DOCUMENTS ARE PRELIMINARY AND SUBJECT TO CHANGE. THEY ARE NOT INTENDED FOR CONSTRUCTION OR BIDDING. THEY WERE PREPARED BY, OR UNDER THE SUPERVISION OF:
Engineer: JEFFREY E. WESANEN
P.E. No.: 117522
Date: 5/11/2017

PREFINAL SUBMITTAL
NOT FOR CONSTRUCTION

US 181 HARBOR BRIDGE

RETAINING WALL SECTION & DETAILS RW107 (PACKAGE 4.0.01)

SCALE: 1"=10'

FLATIRON/DRAGADOS LLC

Stantec
Engineered by Stantec Consulting Services Inc.
Texas Registered Engineering Firm F-6324

Texas Department of Transportation
© 2017

SHEET 1 OF 1

FED. RD. DIV. NO.	FEDERAL AID PROJECT NO.		SHEET NO.
6	HP X597(1)		RTWL 004
STATE	STATE DIST. NO.	COUNTY	
TEXAS	CRP	NUECES	
CONT.	SECT	JOB	HIGHWAY NO.
0101	06	095	US181

PROJECT: US 181 HARBOR BRIDGE

Checked by: Date:
Back-Checked by: Date:
Corrected by: Date:
Verified by: Date:

Detail Check ☐ Internal Review ☐ Design Review ☐ TxDOT
Drawing ☐ Report ☐ Other:
Prepared By: Date:
☐ Drawing Checked Against Calculations ☐ Calculations Check Confirmed
REVIEW PHASE

Plotted: 5/11/2017 5:13:26 PM
Pen Table: HBR_RTWL.tbl
Design File: pw:\\stantec-sc-pw.bentley.com:stantec-sc-pw\Documents\01 Projects\HBR\Build Work\Design\07-Walls\07.01-Sheets\HBR_RET_RW107_DT01.dgn

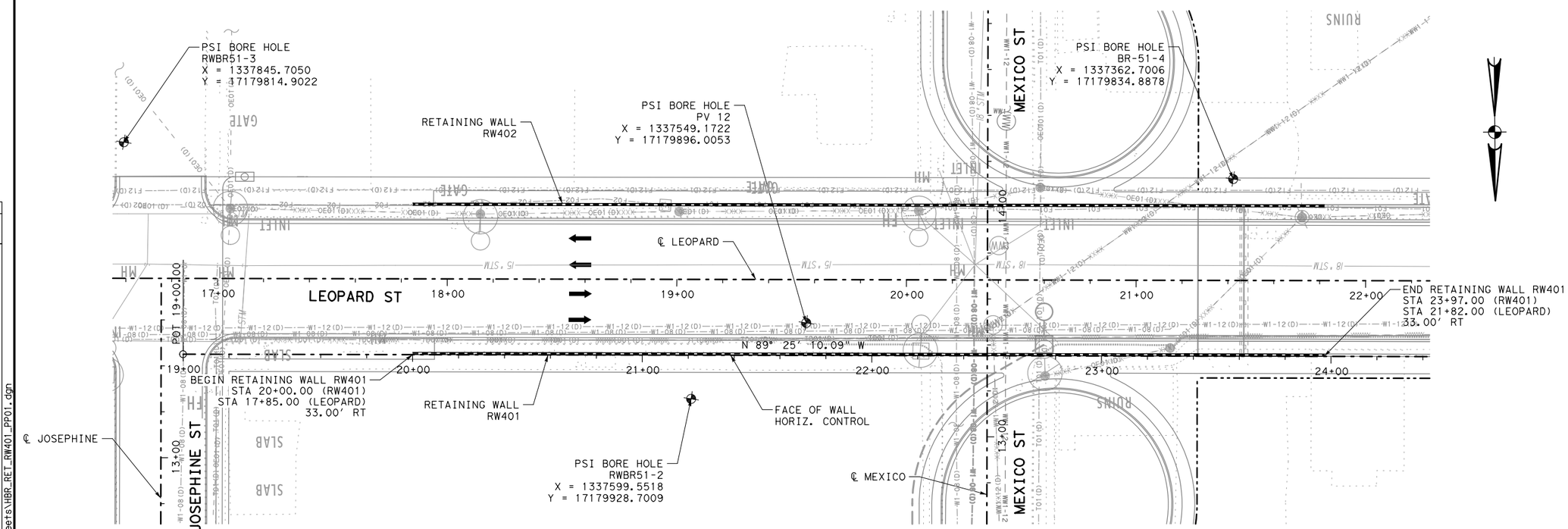

LEGEND

- PROPOSED TRAFFIC
- PROPOSED RETAINING WALL
- RWXXX-1 HORIZONTAL CURVE
- BORE LOCATION
- TEMPORARY SPL SHORING

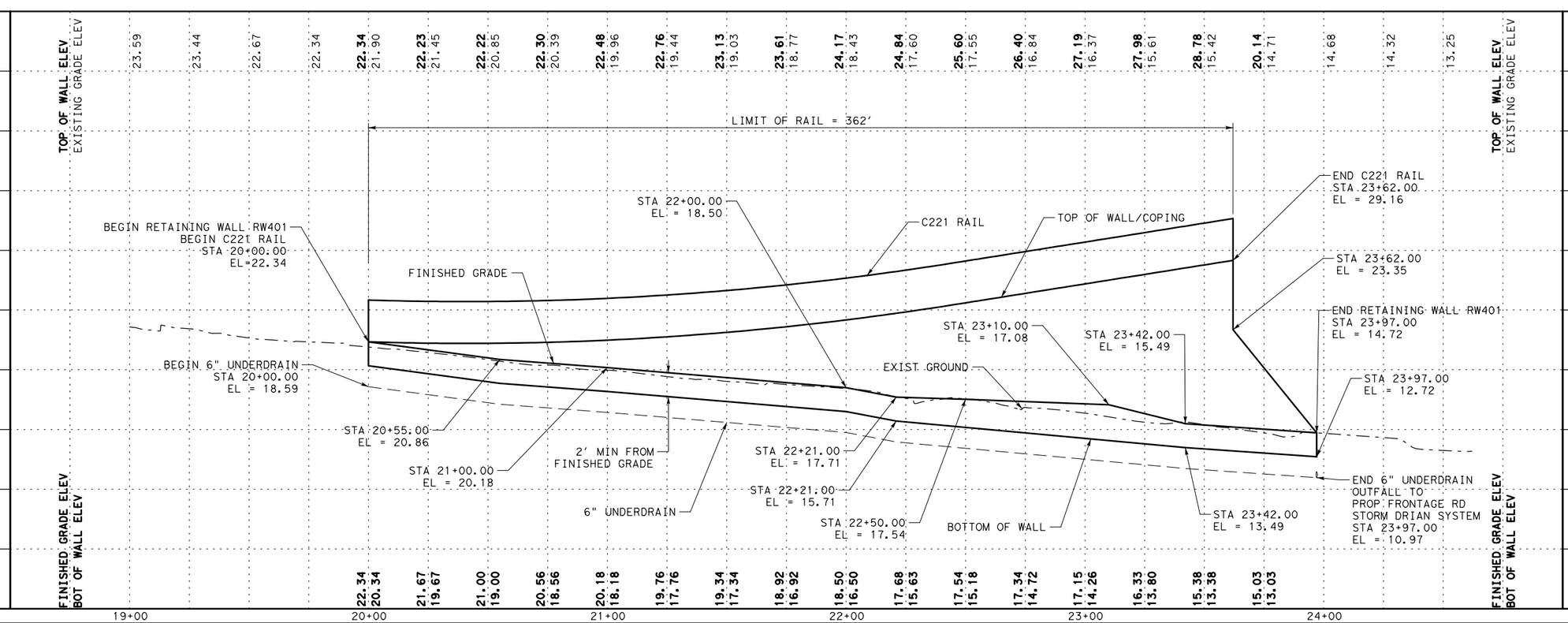

NO.	REVISIONS	BY	DATE

PRELIMINARY
FOR REVIEW ONLY
THESE DOCUMENTS ARE PRELIMINARY AND SUBJECT TO CHANGE. THEY ARE NOT INTENDED FOR CONSTRUCTION OR BIDDING. THEY WERE PREPARED BY, OR UNDER THE SUPERVISION OF:
Engineer: JEFFREY E. WESANEN
P.E. No.: 117522
Date: 5/11/2017

PREFINAL SUBMITTAL

NOT FOR CONSTRUCTION

US 181 HARBOR BRIDGE

RETAINING WALL LAYOUT RW401 (PACKAGE 4.0.01)

SCALE: 1"=50' H
1"=10' V

FLATIRON/DRAGADOS LLC

Stantec
Engineered by Stantec Consulting Services Inc.
Texas Registered Engineering Firm F-6324

Texas Department of Transportation
© 2017

SHEET 1 OF 1

FED. RD. DIV. NO.	FEDERAL AID PROJECT NO.		SHEET NO.
6	HP X597(1)		RTWL 005
STATE	STATE DIST. NO.	COUNTY	
TEXAS	CRP	NUECES	
CONT.	SECT	JOB	HIGHWAY NO.
0101	06	095	US181

PROJECT
US 181 HARBOR BRIDGE

Checked by: Date:
Back-Checked by: Date:
Corrected by: Date:
Verified by: Date:

REVIEW PHASE: ☐ Detail Check ☐ Internal Review ☐ Design Review ☐ TxDOT ☐ Drawing ☐ Report ☐ Other:
Prepared By: Date:
☐ Drawing Checked Against Calculations ☐ Calculations Check Confirmed

Plotted: 5/11/2017 5:13:36 PM
Pen Table: HBR_RTWL.tbl
Design File: pw:\\stantec-sc-pw.bentley.com:stantec-sc-pw\Documents\01 Projects\HBR\Build Work\Design\07-Walls\07.01-Sheets\HBR_RET_RW401_PP01.dgn

NOTES:

1. SEE ROADWAY, BRIDGE, DRAINAGE, LIGHTING, AND BORING LOG SHEETS FOR ADDITIONAL INFORMATION.
2. REFER TO APPROVED AESTHETICS PLAN FOR AESTHETIC TREATMENT, LAYOUT, AND SURFACE FINISHES FOR WALL PANELS, COPING, RAIL, AND RIPRAP.
3. REFER TO TXDOT STANDARD RW(MSE), RW(TRF), AND RW(MSE)DD FOR ADDITIONAL INFORMATION. EMBANKMENT EARTH REINFORCEMENTS SHALL HAVE A MINIMUM LENGTH EQUAL TO OR GREATER THAN THE REQUIREMENTS SHOWN IN RW(MSE)DD.
4. WALL MANUFACTURER MAY ADJUST AND SHALL ACCOMMODATE ANY INLETS POSITIONED WITHIN THE REINFORCING ZONE OF THE MSE WALL. ADJUSTMENTS SHALL BE SHOWN IN THE SHOP DRAWINGS.
5. PROVIDE POSITIVE DRAINAGE DURING CONSTRUCTION AND POST CONSTRUCTION PERIOD.
6. SQUARE FOOT SURFACE AREA OF RETAINING WALL IS MEASURED FROM TOP OF WALL TO BOTTOM OF WALL UNLESS NOTED OTHERWISE.
7. THE UTILITY INFORMATION SHOWN IS NOT GUARANTEED TO BE ACCURATE OR ALL INCLUSIVE. CONTRACTOR SHALL VERIFY THE LOCATIONS OF ALL UTILITIES PRIOR TO CONSTRUCTION. THE CONTRACTOR IS RESPONSIBLE FOR ALL DAMAGES TO UTILITIES CAUSED BY CONSTRUCTION OPERATIONS.
8. NO CONSTRUCTION SHALL BEGIN UNTIL ALL REFERENCED SHEETS ARE APPROVED FOR CONSTRUCTION.

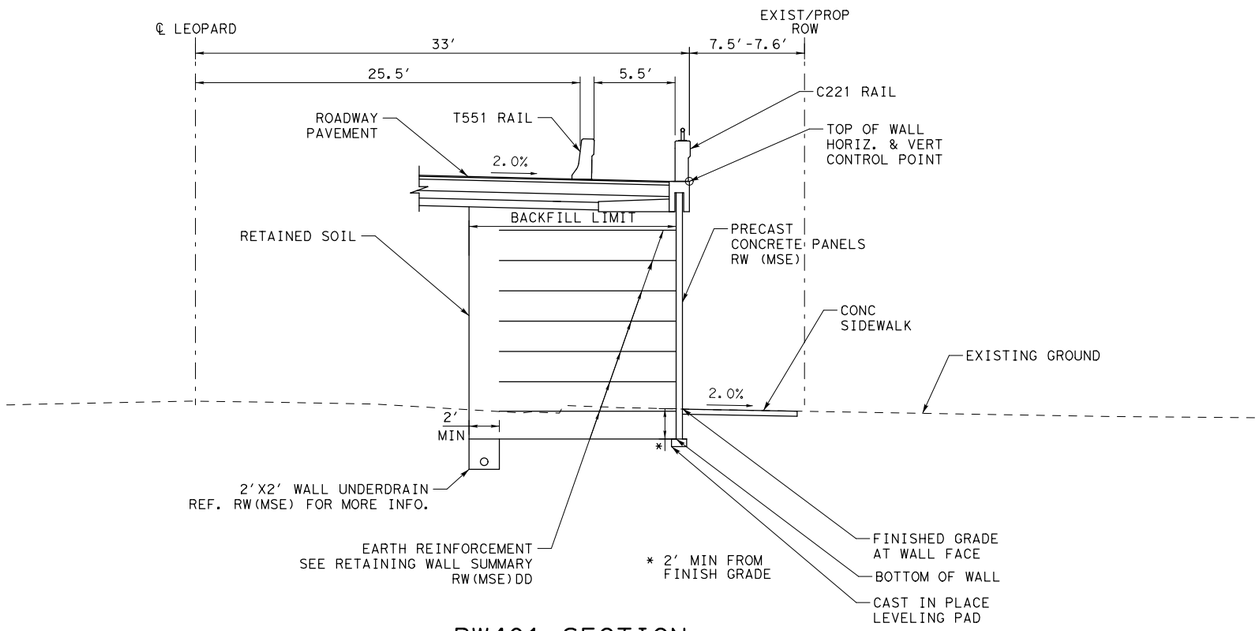

RW401 SECTION

STA 20+00.00 TO STA 23+62.00

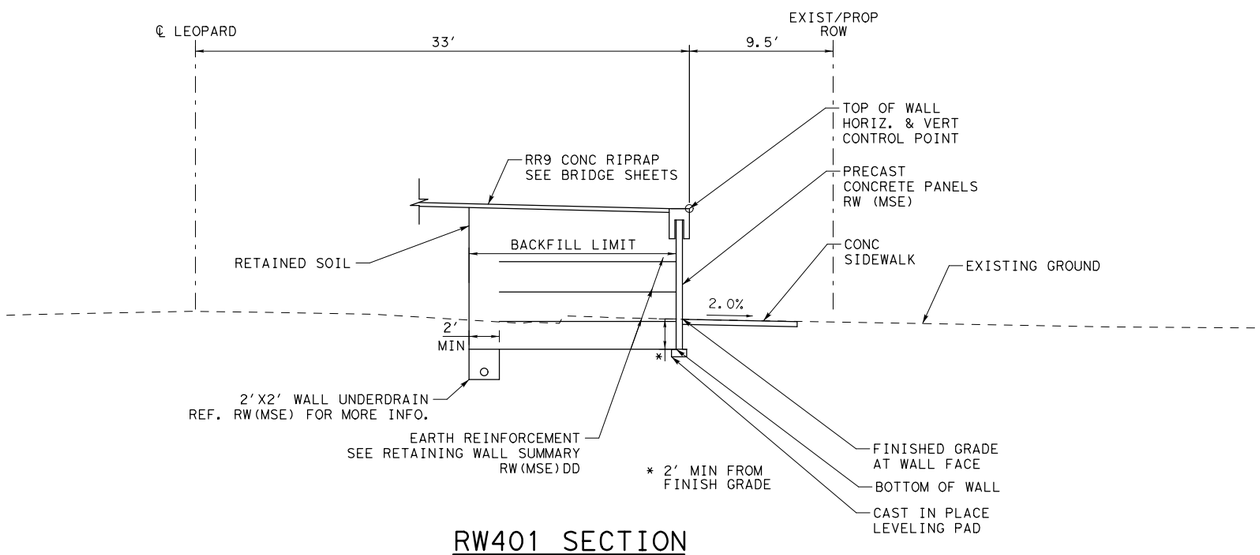

RW401 SECTION

STA 23+62.00 TO STA 23+97.00

RW401 ESTIMATED QUANTITES

ITEM	DESC	DESCRIPTION	QUANT.	UNITS
423	6001	RETAINING WALL (MSE)	3053	SF
450	6030	RAIL (TY C221)	362	LF

NO.	REVISIONS	BY	DATE

PRELIMINARY
FOR REVIEW ONLY
THESE DOCUMENTS ARE PRELIMINARY AND SUBJECT TO CHANGE. THEY ARE NOT INTENDED FOR CONSTRUCTION OR BIDDING. THEY WERE PREPARED BY, OR UNDER THE SUPERVISION OF:
Engineer: JEFFREY E. WESANEN
P.E. No.: 117522
Date: 5/11/2017

PREFINAL SUBMITTAL

NOT FOR CONSTRUCTION

US 181 HARBOR BRIDGE

RETAINING WALL SECTION & DETAILS RW401 (PACKAGE 4.0.01)

SCALE: 1"=10′

FLATIRON/DRAGADOS LLC

Stantec
Engineered by Stantec Consulting Services Inc.
Texas Registered Engineering Firm F-6324

Texas Department of Transportation
© 2017
SHEET 1 OF 1

FED. RD. DIV. NO.	FEDERAL AID PROJECT NO.		SHEET NO.
6	HP X597(1)		RTWL 006
STATE	STATE DIST. NO.	COUNTY	
TEXAS	CRP	NUECES	
CONT.	SECT	JOB	HIGHWAY NO.
0101	06	095	US181

PROJECT
US 181 HARBOR BRIDGE

Checked by: Date:
Back-Checked by: Date:
Corrected by: Date:
Verified by: Date:

☐ TxDOT
☐ Design Review
☐ Other:
☐ Internal Review
☐ Detail Check
☐ Drawing
☐ Report
Prepared By: Date:
☐ Calculations Check Confirmed
☐ Drawing Checked Against Calculations

REVIEW PHASE

Plotted: 5/11/2017 5:13:48 PM
Pen Table: HBR_RTWL.tbl
Design File: pw:\\stantec-sc-pw.bentley.com:stantec-sc-pw\Documents\01 Projects\HBR\Build Work\Design\07-Walls\07.01-Sheets\HBR_RET_RW401_DT01.dgn

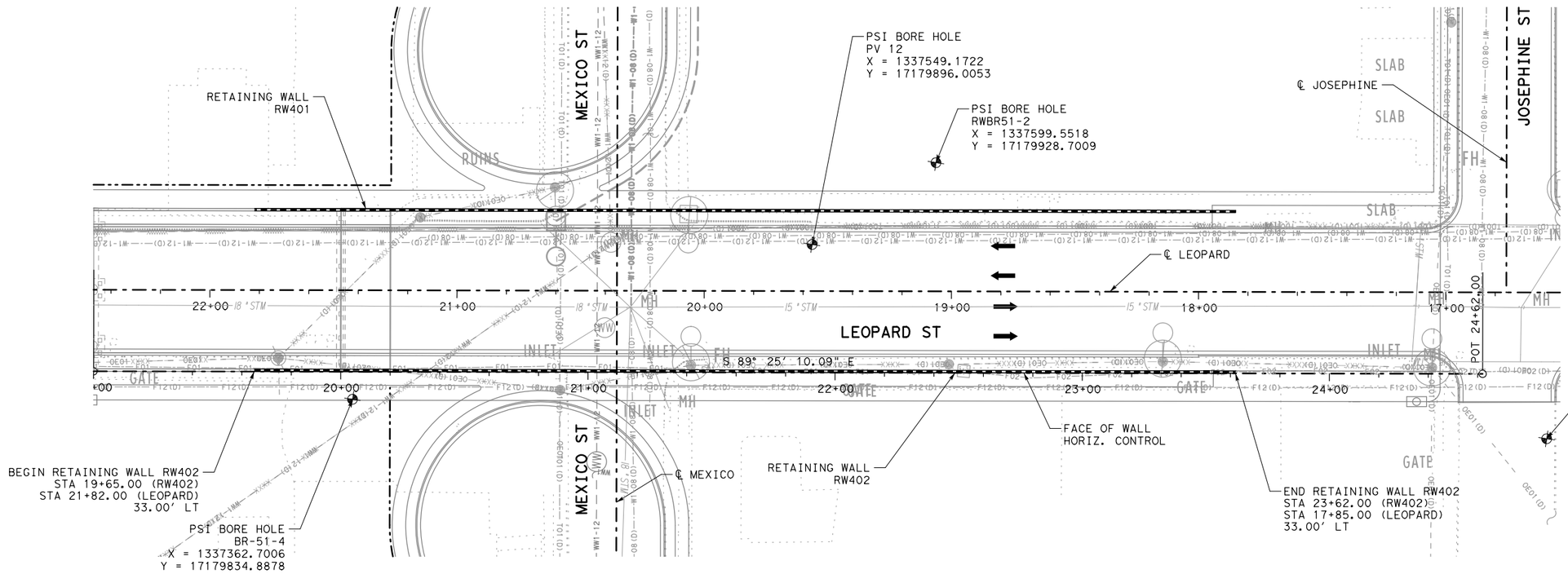

LEGEND

- PROPOSED TRAFFIC
- PROPOSED RETAINING WALL
- RWXXX-1 HORIZONTAL CURVE
- BORE LOCATION
- TEMPORARY SPL SHORING

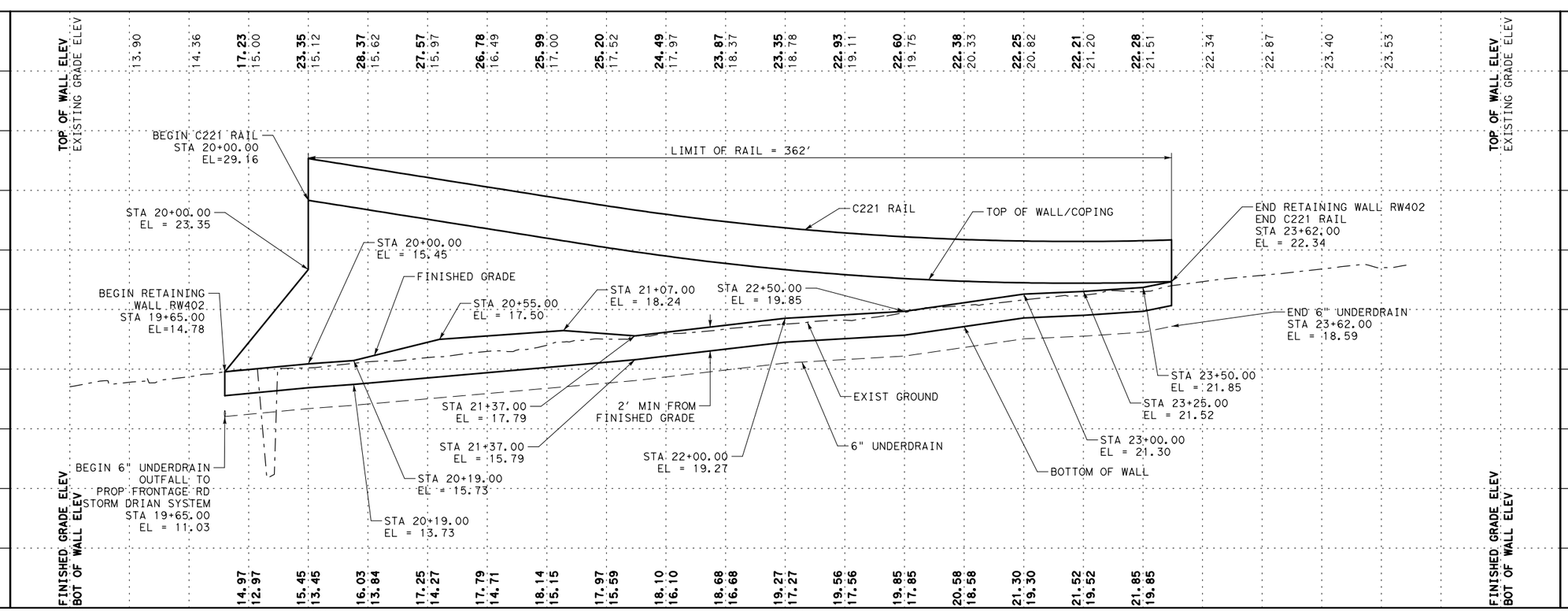

NO.	REVISIONS	BY	DATE

PRELIMINARY
FOR REVIEW ONLY
THESE DOCUMENTS ARE PRELIMINARY AND SUBJECT TO CHANGE. THEY ARE NOT INTENDED FOR CONSTRUCTION OR BIDDING. THEY WERE PREPARED BY, OR UNDER THE SUPERVISION OF:
Engineer: JEFFREY E. WESANEN
P.E. No.: 117522
Date: 5/11/2017

PREFINAL SUBMITTAL

NOT FOR CONSTRUCTION

US 181 HARBOR BRIDGE

RETAINING WALL LAYOUT RW402 (PACKAGE 4.0.01)

SCALE: 1"=50' H
1"=10' V

FLATIRON/DRAGADOS LLC

Stantec
Engineered by Stantec Consulting Services Inc.
Texas Registered Engineering Firm F-6324

Texas Department of Transportation
© 2017

SHEET 1 OF 1

FED. RD. DIV. NO.	FEDERAL AID PROJECT NO.		SHEET NO.
6	HP X597(1)		RTWL 007
STATE	STATE DIST. NO.	COUNTY	
TEXAS	CRP	NUECES	
CONT.	SECT	JOB	HIGHWAY NO.
0101	06	095	US181

PROJECT
US 181 HARBOR BRIDGE

Checked by: Date:
Back-Checked by: Date:
Corrected by: Date:
Verified by: Date:

☐ Detail Check ☐ Internal Review ☐ Design Review ☐ TxDOT
☐ Drawing ☐ Report ☐ Other:
Prepared By: Date:
☐ Drawing Checked Against Calculations ☐ Calculations Check Confirmed

REVIEW PHASE

Plotted: 5/11/2017 5:13:58 PM
Pen Table: HBR_RTWL.tbl
Design File: pw:\\stantec-sc-pw.bentley.com:stantec-sc-pw\Documents\01 Projects\HBR\Build Work\Design\07-Walls\07.01-Sheets\HBR_RET_RW402_PP01.dgn

NOTES:

1. SEE ROADWAY, BRIDGE, DRAINAGE, LIGHTING, AND BORING LOG SHEETS FOR ADDITIONAL INFORMATION.
2. REFER TO APPROVED AESTHETICS PLAN FOR AESTHETIC TREATMENT, LAYOUT, AND SURFACE FINISHES FOR WALL PANELS, COPING, RAIL, AND RIPRAP.
3. REFER TO TXDOT STANDARD RW(MSE), RW(TRF), AND RW(MSE)DD FOR ADDITIONAL INFORMATION. EMBANKMENT EARTH REINFORCEMENTS SHALL HAVE A MINIMUM LENGTH EQUAL TO OR GREATER THAN THE REQUIREMENTS SHOWN IN RW(MSE)DD.
4. WALL MANUFACTURER MAY ADJUST AND SHALL ACCOMMODATE ANY INLETS POSITIONED WITHIN THE REINFORCING ZONE OF THE MSE WALL. ADJUSTMENTS SHALL BE SHOWN IN THE SHOP DRAWINGS.
5. PROVIDE POSITIVE DRAINAGE DURING CONSTRUCTION AND POST CONSTRUCTION PERIOD.
6. SQUARE FOOT SURFACE AREA OF RETAINING WALL IS MEASURED FROM TOP OF WALL TO BOTTOM OF WALL UNLESS NOTED OTHERWISE.
7. THE UTILITY INFORMATION SHOWN IS NOT GUARANTEED TO BE ACCURATE OR ALL INCLUSIVE. CONTRACTOR SHALL VERIFY THE LOCATIONS OF ALL UTILITIES PRIOR TO CONSTRUCTION. THE CONTRACTOR IS RESPONSIBLE FOR ALL DAMAGES TO UTILITIES CAUSED BY CONSTRUCTION OPERATIONS.
8. NO CONSTRUCTION SHALL BEGIN UNTIL ALL REFERENCED SHEETS ARE APPROVED FOR CONSTRUCTION.

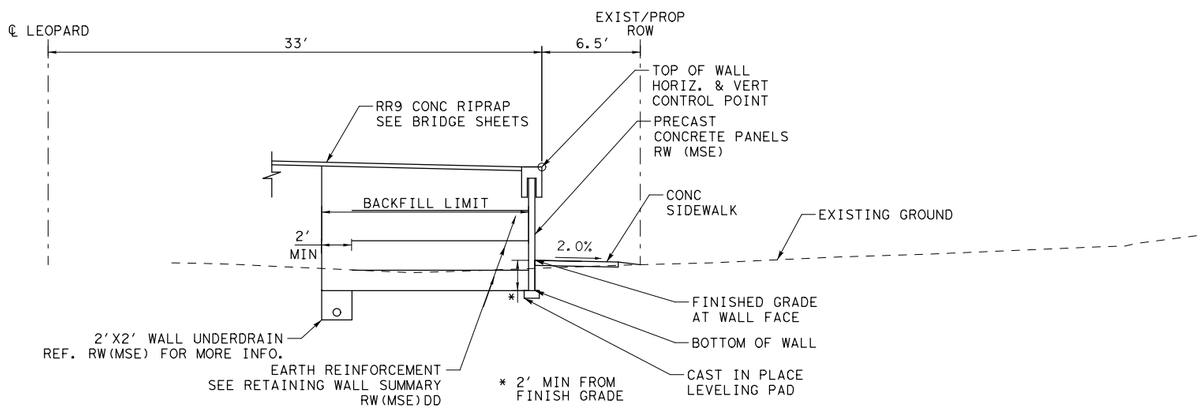

RW402 SECTION

STA 19+65.00 TO STA 20+00.00

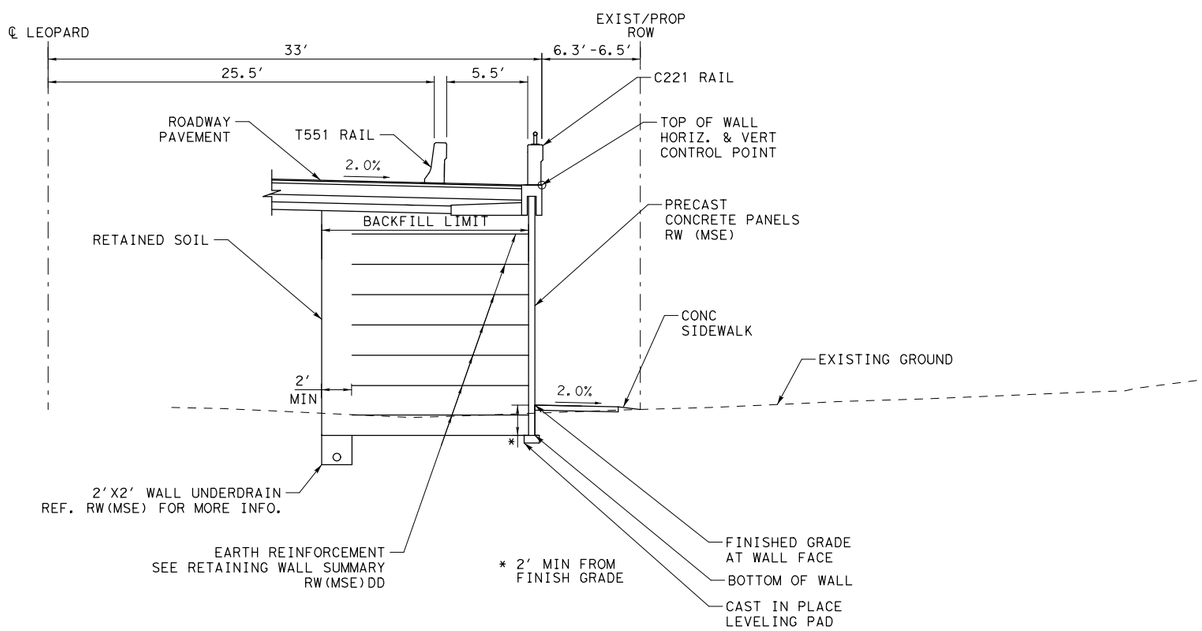

RW402 SECTION

STA 20+00.00 TO STA 23+62.00

RW402 ESTIMATED QUANTITES

ITEM	DESC	DESCRIPTION	QUANT.	UNITS
423	6001	RETAINING WALL (MSE)	2999	SF
450	6030	RAIL (TY C221)	362	LF

NO.	REVISIONS	BY	DATE

PRELIMINARY
FOR REVIEW ONLY
THESE DOCUMENTS ARE PRELIMINARY AND SUBJECT TO CHANGE. THEY ARE NOT INTENDED FOR CONSTRUCTION OR BIDDING. THEY WERE PREPARED BY, OR UNDER THE SUPERVISION OF:
Engineer: JEFFREY E. WESANEN
P.E. No.: 117522
Date: 5/11/2017

PREFINAL SUBMITTAL

NOT FOR CONSTRUCTION

US 181 HARBOR BRIDGE

RETAINING WALL SECTION & DETAILS RW402 (PACKAGE 4.0.01)

SCALE: 1"=10′

FLATIRON/DRAGADOS LLC

Stantec
Engineered by Stantec Consulting Services Inc.
Texas Registered Engineering Firm F-6324

Texas Department of Transportation
© 2017
SHEET 1 OF 1

FED. RD. DIV. NO.	FEDERAL AID PROJECT NO.		SHEET NO.
6	HP X597(1)		RTWL 008
STATE	STATE DIST. NO.	COUNTY	
TEXAS	CRP	NUECES	
CONT.	SECT	JOB	HIGHWAY NO.
0101	06	095	US181

PROJECT: US 181 HARBOR BRIDGE

Checked by: Date: | Back-Checked by: Date: | Corrected by: Date: | Verified by: Date:

☐ Detail Check ☐ Internal Review ☐ Design Review ☐ TxDOT
☐ Drawing ☐ Report ☐ Other:
Prepared By: Date:
☐ Drawing Checked Against Calculations ☐ Calculations Check Confirmed
REVIEW PHASE

Plotted: 5/11/2017 5:14:09 PM
Pen Table: HBR_RTWL.tbl
Design File: pw:\\stantec-sc-pw.bentley.com:stantec-sc-pw\Documents\01 Projects\HBR\Build Work\Design\07-Walls\07.01-Sheets\HBR_RET_RW402_DT01.dgn

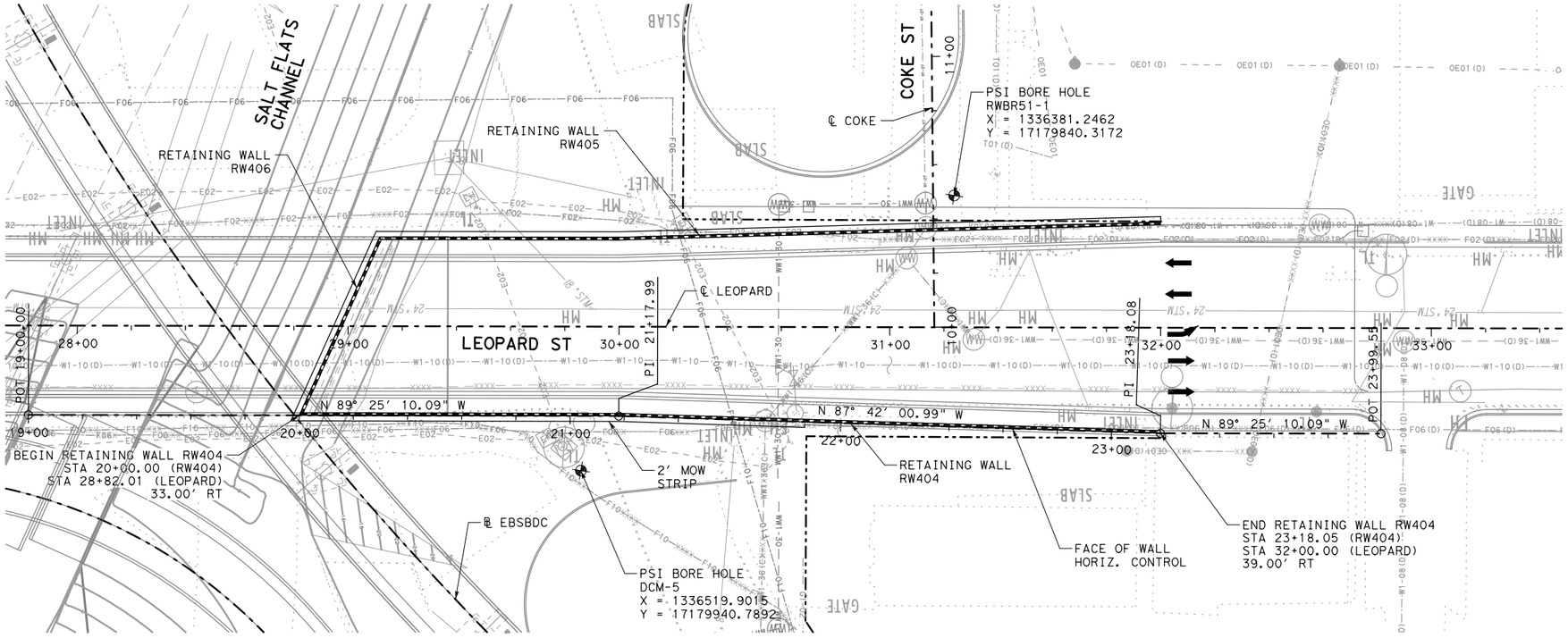

LEGEND

- PROPOSED TRAFFIC
- PROPOSED RETAINING WALL
- RWXXX-1 HORIZONTAL CURVE
- BORE LOCATION
- TEMPORARY SPL SHORING

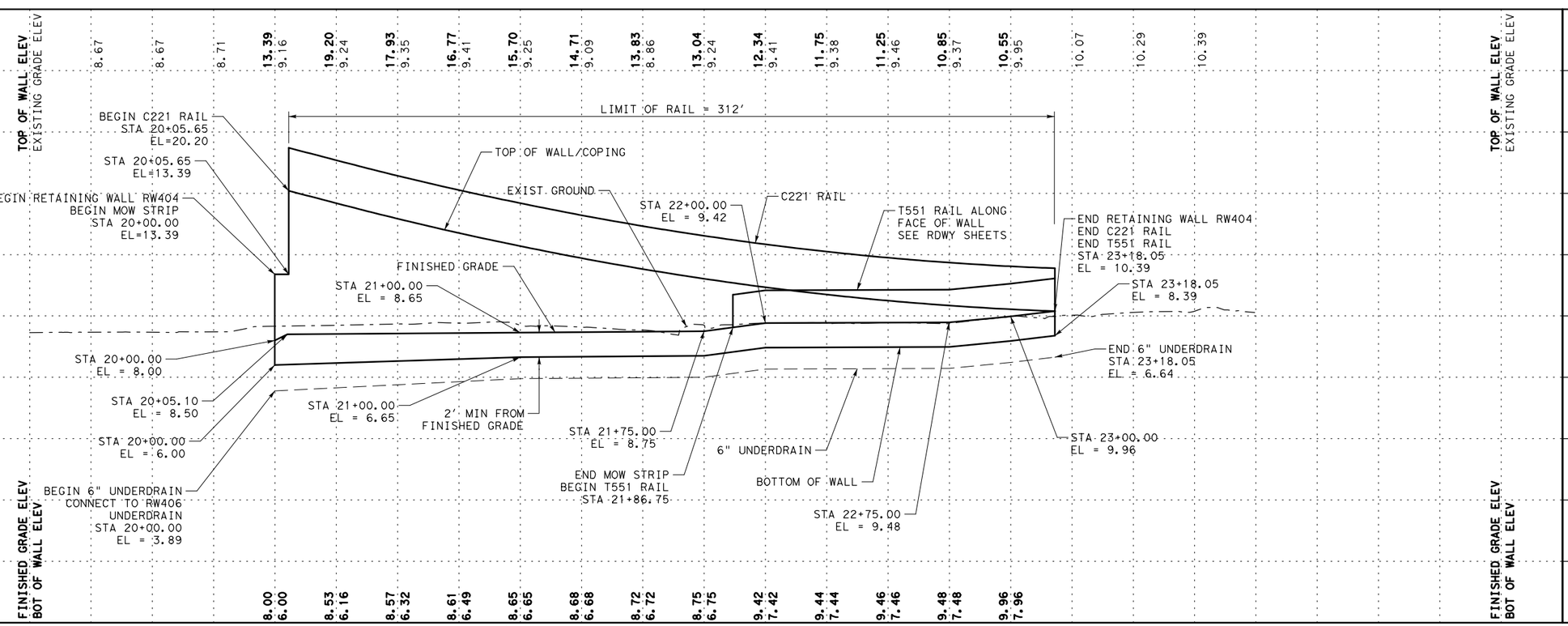

NO.	REVISIONS	BY	DATE

PRELIMINARY
FOR REVIEW ONLY
THESE DOCUMENTS ARE PRELIMINARY AND SUBJECT TO CHANGE. THEY ARE NOT INTENDED FOR CONSTRUCTION OR BIDDING. THEY WERE PREPARED BY, OR UNDER THE SUPERVISION OF:
Engineer: JEFFREY E. WESANEN
P.E. No.: 117522
Date: 5/11/2017

PREFINAL SUBMITTAL

NOT FOR CONSTRUCTION

US 181 HARBOR BRIDGE

RETAINING WALL LAYOUT RW404 (PACKAGE 4.0.01)

SCALE: 1"=50' H
1"=10' V

FLATIRON/DRAGADOS LLC

Stantec
Engineered by Stantec Consulting Services Inc.
Texas Registered Engineering Firm F-6324

Texas Department of Transportation
© 2017

FED. RD. DIV. NO.	FEDERAL AID PROJECT NO.	SHEET NO.
6	HP X597(1)	RTWL 009
STATE	STATE DIST. NO. / COUNTY	
TEXAS	CRP / NUECES	
CONT.	SECT / JOB	HIGHWAY NO.
0101	06 / 095	US181

SHEET 1 OF 1

PROJECT
US 181 HARBOR BRIDGE

Checked by: Date:
Back-Checked by: Date:
Corrected by: Date:
Verified by: Date:

REVIEW PHASE: ☐ Detail Check ☐ Internal Review ☐ Design Review ☐ TxDOT ☐ Drawing ☐ Report ☐ Other:
Prepared By: Date:
☐ Drawing Checked Against Calculations ☐ Calculations Check Confirmed

Plotted: 5/11/2017 5:14:20 PM
Pen Table: HBR_RTWL.tbl
Design File: pw:\\stantec-sc-pw.bentley.com:stantec-sc-pw\Documents\01 Projects\HBR\Build Work\Design\07-Walls\07.01-Sheets\HBR_RET_RW404_PP01.dgn

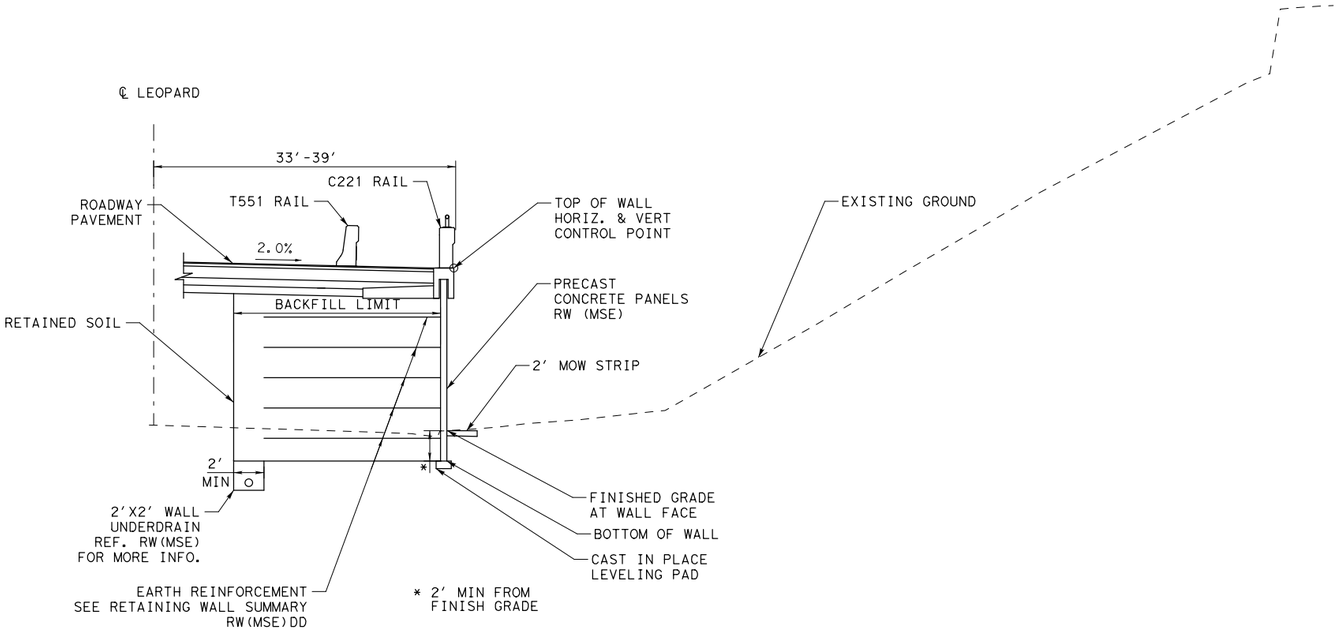

RW404 SECTION

STA 20+00.00 TO STA 21+86.75

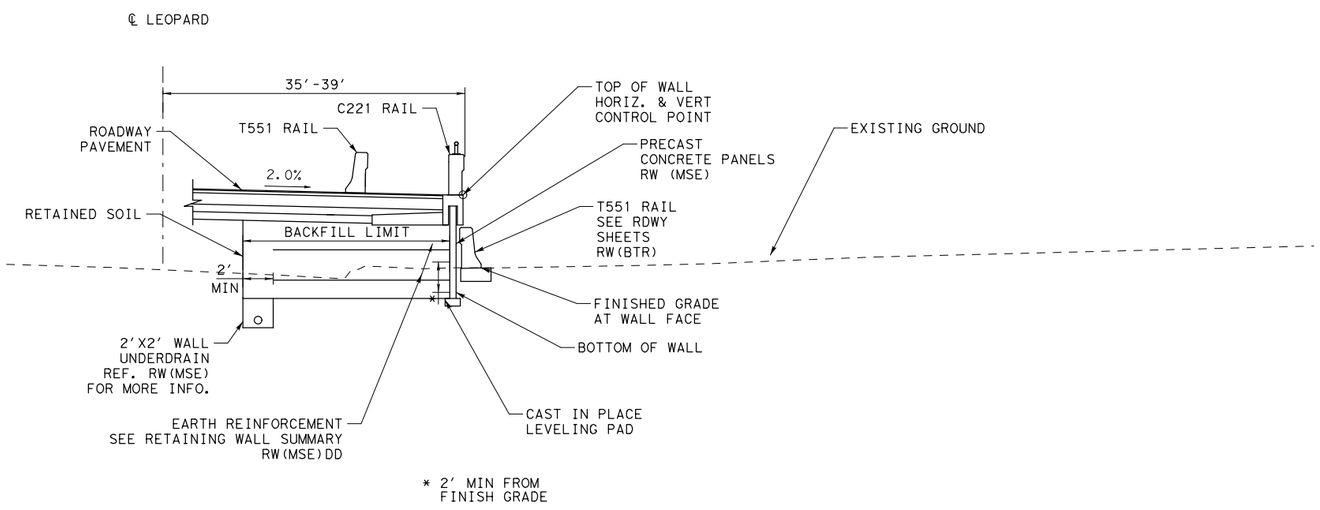

RW404 SECTION

STA 21+86.75 TO STA 23+18.05

NOTES:

1. SEE ROADWAY, BRIDGE, DRAINAGE, LIGHTING, AND BORING LOG SHEETS FOR ADDITIONAL INFORMATION.
2. REFER TO APPROVED AESTHETICS PLAN FOR AESTHETIC TREATMENT, LAYOUT, AND SURFACE FINISHES FOR WALL PANELS, COPING, RAIL, AND RIPRAP.
3. REFER TO TXDOT STANDARD RW(MSE), RW(TRF), AND RW(MSE)DD FOR ADDITIONAL INFORMATION. EMBANKMENT EARTH REINFORCEMENTS SHALL HAVE A MINIMUM LENGTH EQUAL TO OR GREATER THAN THE REQUIREMENTS SHOWN IN RW(MSE)DD.
4. WALL MANUFACTURER MAY ADJUST AND SHALL ACCOMMODATE ANY INLETS POSITIONED WITHIN THE REINFORCING ZONE OF THE MSE WALL. ADJUSTMENTS SHALL BE SHOWN IN THE SHOP DRAWINGS.
5. PROVIDE POSITIVE DRAINAGE DURING CONSTRUCTION AND POST CONSTRUCTION PERIOD.
6. SQUARE FOOT SURFACE AREA OF RETAINING WALL IS MEASURED FROM TOP OF WALL TO BOTTOM OF WALL UNLESS NOTED OTHERWISE.
7. THE UTILITY INFORMATION SHOWN IS NOT GUARANTEED TO BE ACCURATE OR ALL INCLUSIVE. CONTRACTOR SHALL VERIFY THE LOCATIONS OF ALL UTILITIES PRIOR TO CONSTRUCTION. THE CONTRACTOR IS RESPONSIBLE FOR ALL DAMAGES TO UTILITIES CAUSED BY CONSTRUCTION OPERATIONS.
8. NO CONSTRUCTION SHALL BEGIN UNTIL ALL REFERENCED SHEETS ARE APPROVED FOR CONSTRUCTION.

RW404 ESTIMATED QUANTITES

ITEM	DESC	DESCRIPTION	QUANT.	UNITS
423	6001	RETAINING WALL (MSE)	2258	SF
432	6045	RIPRAP (MOW STRIP) (4IN)	5	CY
450	6030	RAIL (TY C221)	312	LF

NO.	REVISIONS	BY	DATE

PRELIMINARY
FOR REVIEW ONLY
THESE DOCUMENTS ARE PRELIMINARY AND SUBJECT TO CHANGE. THEY ARE NOT INTENDED FOR CONSTRUCTION OR BIDDING. THEY WERE PREPARED BY, OR UNDER THE SUPERVISION OF:
Engineer: JEFFREY E. WESANEN
P.E. No.: 117522
Date: 5/11/2017

PREFINAL SUBMITTAL

NOT FOR CONSTRUCTION

US 181 HARBOR BRIDGE

RETAINING WALL SECTION & DETAILS RW404 (PACKAGE 4.0.01)

SCALE: 1"=10'

FLATIRON/DRAGADOS LLC

Stantec
Engineered by Stantec Consulting Services Inc.
Texas Registered Engineering Firm F-6324

Texas Department of Transportation
© 2017
SHEET 1 OF 1

FED. RD. DIV. NO.	FEDERAL AID PROJECT NO.		SHEET NO.
6	HP X597(1)		RTWL 010
STATE	STATE DIST. NO.	COUNTY	
TEXAS	CRP	NUECES	
CONT.	SECT	JOB	HIGHWAY NO.
0101	06	095	US181

PROJECT
US 181 HARBOR BRIDGE

Checked by: Date:
Back-Checked by: Date:
Corrected by: Date:
Verified by: Date:

REVIEW PHASE
☐ Detail Check ☐ Internal Review ☐ Design Review ☐ TxDOT
☐ Drawing ☐ Report ☐ Other:
Prepared By: Date:
☐ Drawing Checked Against Calculations ☐ Calculations Check Confirmed

Plotted: 5/11/2017 5:14:26 PM
Pen Table: HBR_RTWL.tbl
Design File: pw:\\stantec-sc-pw.bentley.com:stantec-sc-pw\Documents\01 Projects\HBR\Build Work\Design\07-Walls\07.01-Sheets\HBR_RET_RW404_DT01.dgn

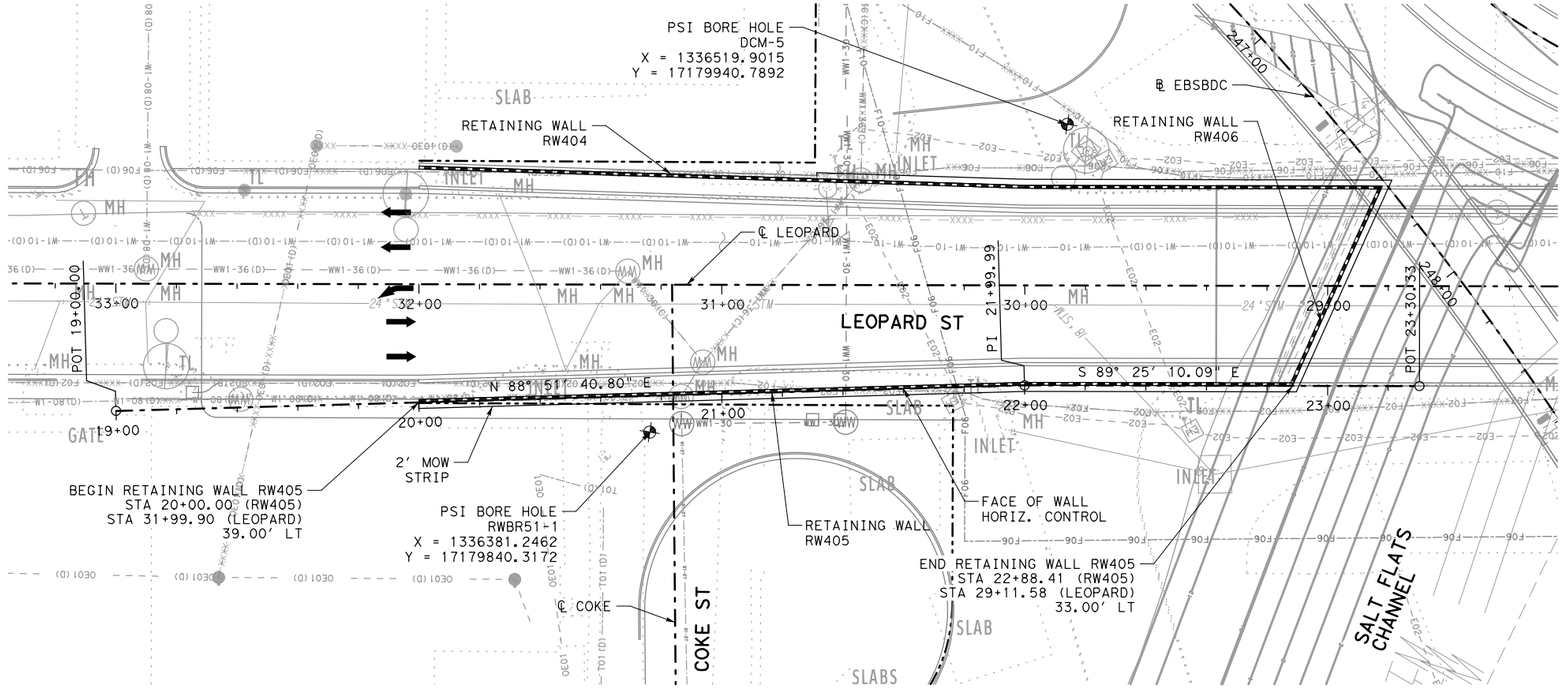

LEGEND

- PROPOSED TRAFFIC
- PROPOSED RETAINING WALL
- RWXXX-1 HORIZONTAL CURVE
- BORE LOCATION
- TEMPORARY SPL SHORING

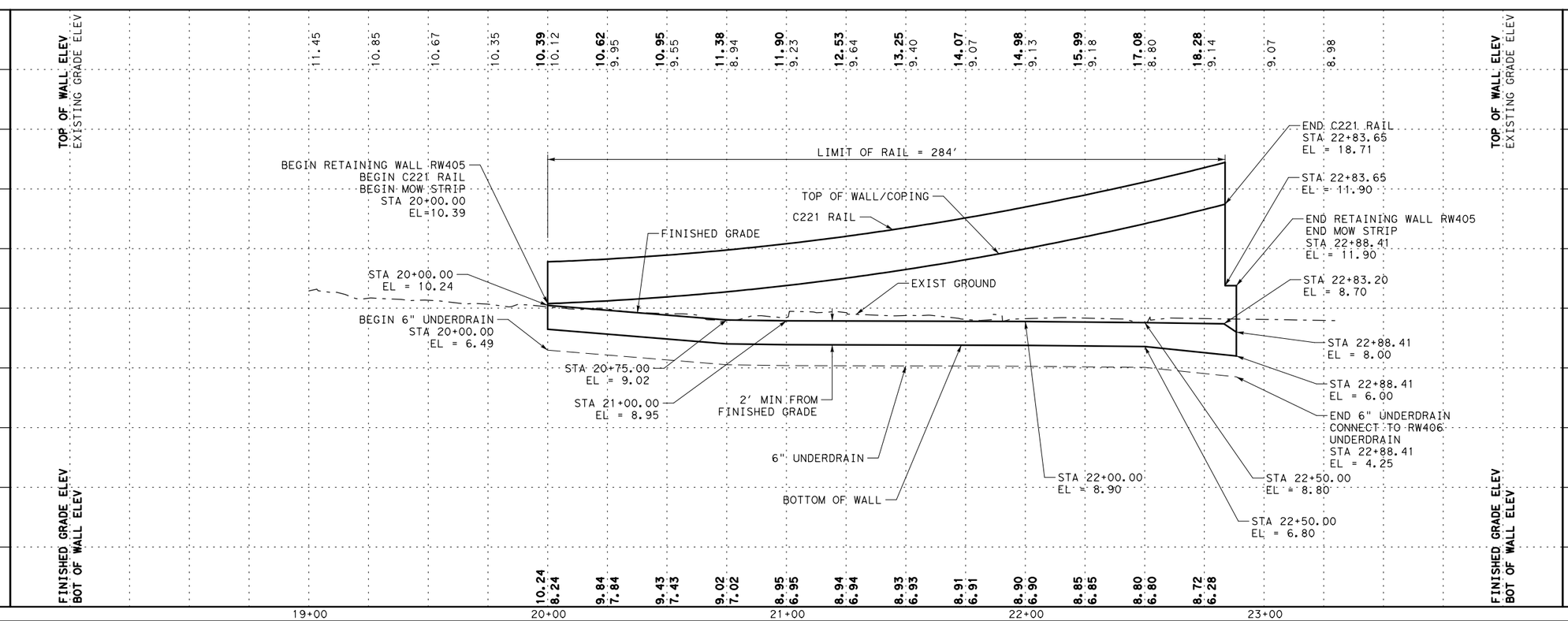

NO.	REVISIONS	BY	DATE

PRELIMINARY
FOR REVIEW ONLY
THESE DOCUMENTS ARE PRELIMINARY AND SUBJECT TO CHANGE. THEY ARE NOT INTENDED FOR CONSTRUCTION OR BIDDING. THEY WERE PREPARED BY, OR UNDER THE SUPERVISION OF:
Engineer: JEFFREY E. WESANEN
P.E. No.: 117522
Date: 5/11/2017

PREFINAL SUBMITTAL

NOT FOR CONSTRUCTION

US 181 HARBOR BRIDGE

RETAINING WALL LAYOUT RW405 (PACKAGE 4.0.01)

SCALE: 1"=50' H
1"=10' V

FLATIRON/DRAGADOS LLC

Stantec
Engineered by Stantec Consulting Services Inc.
Texas Registered Engineering Firm F-6324

Texas Department of Transportation
© 2017

SHEET 1 OF 1

FED. RD. DIV. NO.	FEDERAL AID PROJECT NO.		SHEET NO.
6	HP X597(1)		RTWL 011
STATE	STATE DIST. NO.	COUNTY	
TEXAS	CRP	NUECES	
CONT.	SECT	JOB	HIGHWAY NO.
0101	06	095	US181

PROJECT
US 181 HARBOR BRIDGE

Checked by: Date:
Back-Checked by: Date:
Corrected by: Date:
Verified by: Date:

☐ TxDOT
☐ Detail Check ☐ Internal Review ☐ Design Review
☐ Drawing ☐ Report ☐ Other:
Prepared By: Date:
☐ Drawing Checked Against Calculations ☐ Calculations Check Confirmed
REVIEW PHASE

Plotted: 5/11/2017 5:14:35 PM
Pen Table: HBR_RTWL.tbl
Design File: pw:\\stantec-sc-pw.bentley.com:stantec-sc-pw\Documents\01 Projects\HBR\Build Work\Design\07-Walls\07.01-Sheets\HBR_RET_RW405_PP01.dgn

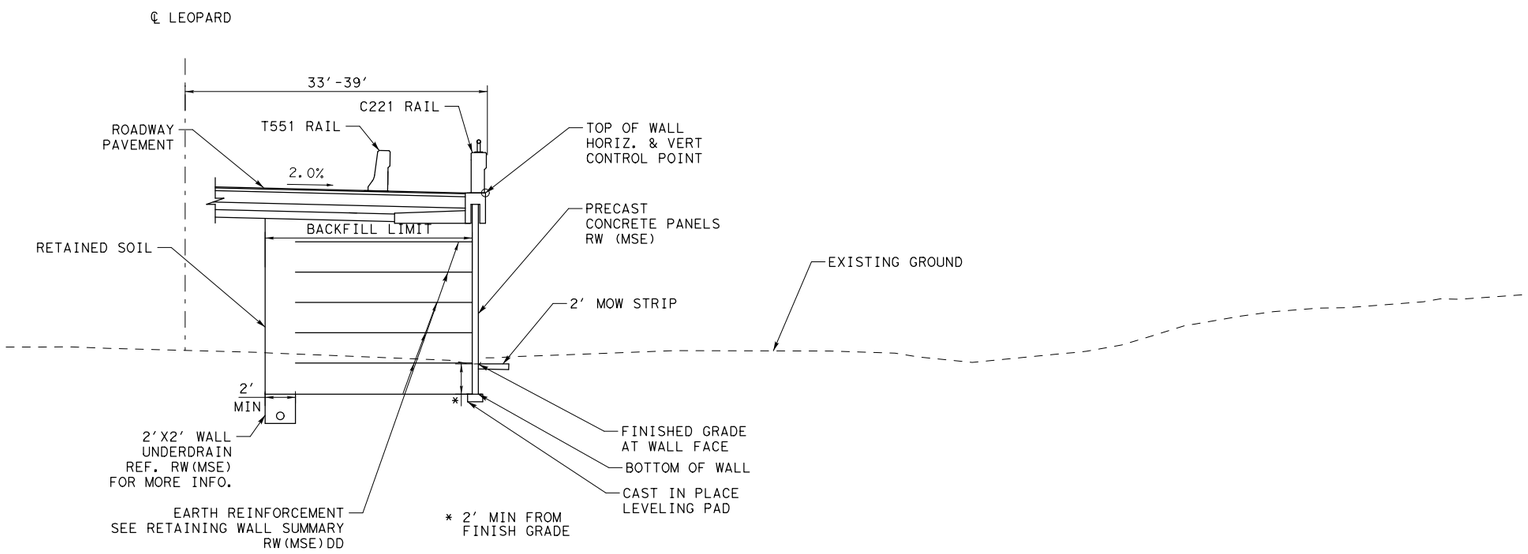

RW405 SECTION

STA 20+00.00 TO STA 22+88.41

NOTES:

1. SEE ROADWAY, BRIDGE, DRAINAGE, LIGHTING, AND BORING LOG SHEETS FOR ADDITIONAL INFORMATION.
2. REFER TO APPROVED AESTHETICS PLAN FOR AESTHETIC TREATMENT, LAYOUT, AND SURFACE FINISHES FOR WALL PANELS, COPING, RAIL, AND RIPRAP.
3. REFER TO TXDOT STANDARD RW(MSE), RW(TRF), AND RW(MSE)DD FOR ADDITIONAL INFORMATION. EMBANKMENT EARTH REINFORCEMENTS SHALL HAVE A MINIMUM LENGTH EQUAL TO OR GREATER THAN THE REQUIREMENTS SHOWN IN RW(MSE)DD.
4. WALL MANUFACTURER MAY ADJUST AND SHALL ACCOMMODATE ANY INLETS POSITIONED WITHIN THE REINFORCING ZONE OF THE MSE WALL. ADJUSTMENTS SHALL BE SHOWN IN THE SHOP DRAWINGS.
5. PROVIDE POSITIVE DRAINAGE DURING CONSTRUCTION AND POST CONSTRUCTION PERIOD.
6. SQUARE FOOT SURFACE AREA OF RETAINING WALL IS MEASURED FROM TOP OF WALL TO BOTTOM OF WALL UNLESS NOTED OTHERWISE.
7. THE UTILITY INFORMATION SHOWN IS NOT GUARANTEED TO BE ACCURATE OR ALL INCLUSIVE. CONTRACTOR SHALL VERIFY THE LOCATIONS OF ALL UTILITIES PRIOR TO CONSTRUCTION. THE CONTRACTOR IS RESPONSIBLE FOR ALL DAMAGES TO UTILITIES CAUSED BY CONSTRUCTION OPERATIONS.
8. NO CONSTRUCTION SHALL BEGIN UNTIL ALL REFERENCED SHEETS ARE APPROVED FOR CONSTRUCTION.

RW405 ESTIMATED QUANTITES

ITEM	DESC	DESCRIPTION	QUANT.	UNITS
423	6001	RETAINING WALL (MSE)	1864	SF
432	6045	RIPRAP (MOW STRIP) (4IN)	8	CY
450	6030	RAIL (TY C221)	284	LF

NO.	REVISIONS	BY	DATE

PRELIMINARY
FOR REVIEW ONLY
THESE DOCUMENTS ARE PRELIMINARY AND SUBJECT TO CHANGE. THEY ARE NOT INTENDED FOR CONSTRUCTION OR BIDDING. THEY WERE PREPARED BY, OR UNDER THE SUPERVISION OF:
Engineer: JEFFREY E. WESANEN
P.E. No.: 117522
Date: 5/11/2017

PREFINAL SUBMITTAL

NOT FOR CONSTRUCTION

US 181 HARBOR BRIDGE

RETAINING WALL SECTION & DETAILS RW405 (PACKAGE 4.0.01)

SCALE: 1"=10'

FLATIRON/DRAGADOS LLC

Stantec
Engineered by Stantec Consulting Services Inc.
Texas Registered Engineering Firm F-6324

Texas Department of Transportation
© 2017

SHEET 1 OF 1

FED. RD. DIV. NO.	FEDERAL AID PROJECT NO.		SHEET NO.
6	HP X597(1)		RTWL 012
STATE	STATE DIST. NO.	COUNTY	
TEXAS	CRP	NUECES	
CONT.	SECT	JOB	HIGHWAY NO.
0101	06	095	US181

PROJECT: US 181 HARBOR BRIDGE

Checked by: Date:
Back-Checked by: Date:
Corrected by: Date:
Verified by: Date:

REVIEW PHASE: ☐ Detail Check ☐ Internal Review ☐ Design Review ☐ TxDOT ☐ Drawing ☐ Report ☐ Other: ____
Prepared By: Date:
☐ Drawing Checked Against Calculations ☐ Calculations Check Confirmed

Plotted: 5/11/2017 5:14:44 PM
Pen Table: HBR_RTWL.tbl
Design File: pw:\\stantec-sc-pw.bentley.com:stantec-sc-pw\Documents\01 Projects\HBR\Build Work\Design\07-Walls\07.01-Sheets\HBR_RET_RW405_DT01.dgn

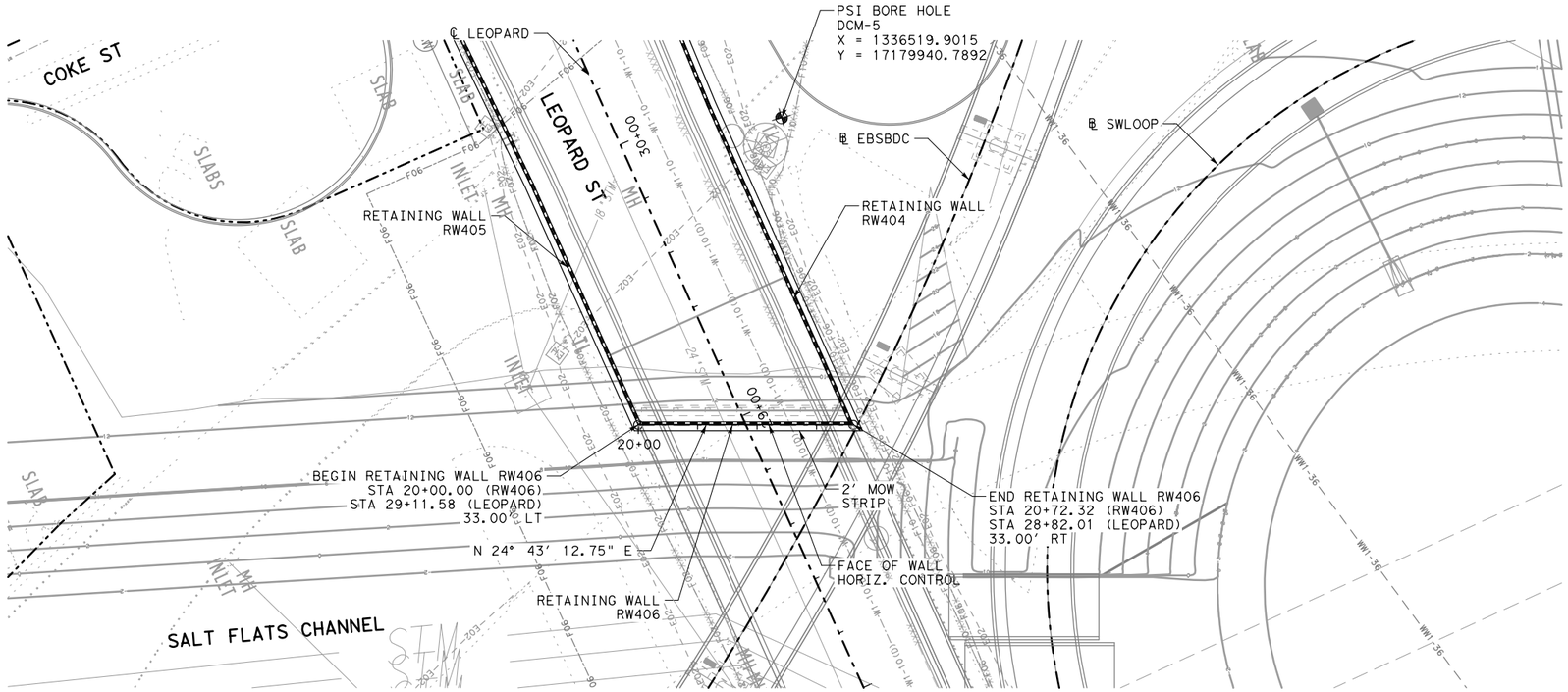

LEGEND

- PROPOSED TRAFFIC
- PROPOSED RETAINING WALL
- RWXXX-1 HORIZONTAL CURVE
- BORE LOCATION
- TEMPORARY SPL SHORING

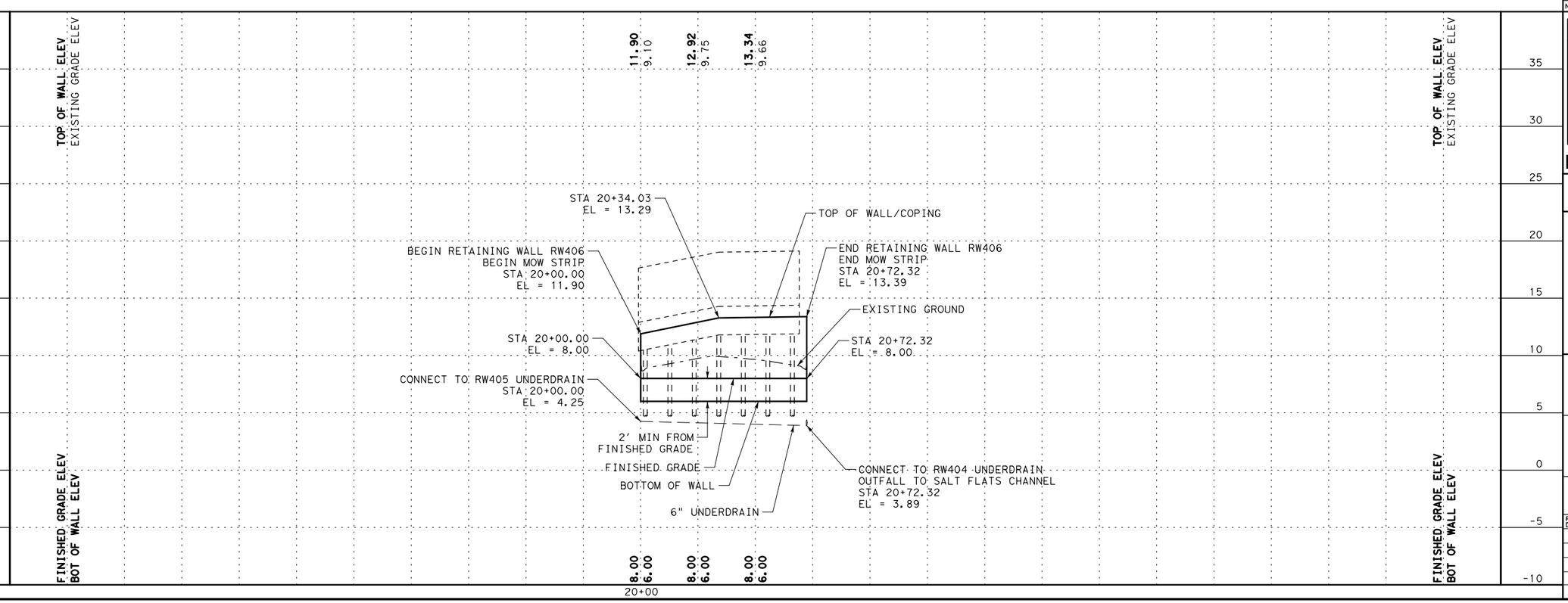

NO.	REVISIONS	BY	DATE

PRELIMINARY
FOR REVIEW ONLY
THESE DOCUMENTS ARE PRELIMINARY AND SUBJECT TO CHANGE. THEY ARE NOT INTENDED FOR CONSTRUCTION OR BIDDING. THEY WERE PREPARED BY, OR UNDER THE SUPERVISION OF:
Engineer: JEFFREY E. WESANEN
P.E. No.: 117522
Date: 5/11/2017

PREFINAL SUBMITTAL

NOT FOR CONSTRUCTION

US 181 HARBOR BRIDGE

RETAINING WALL LAYOUT RW406 (PACKAGE 4.0.01)

SCALE: 1"=50' H
1"=10' V

FLATIRON/DRAGADOS LLC

Stantec
Engineered by Stantec Consulting Services Inc.
Texas Registered Engineering Firm F-6324

Texas Department of Transportation
© 2017

SHEET 1 OF 1

FED. RD. DIV. NO.	FEDERAL AID PROJECT NO.		SHEET NO.
6	HP X597(1)		RTWL 013
STATE	STATE DIST. NO.	COUNTY	
TEXAS	CRP	NUECES	
CONT.	SECT	JOB	HIGHWAY NO.
0101	06	095	US181

PROJECT
US 181 HARBOR BRIDGE

Checked by: Date:
Back-Checked by: Date:
Corrected by: Date:
Verified by: Date:

☐ TxDOT
☐ Detail Check ☐ Internal Review ☐ Design Review
☐ Drawing ☐ Report ☐ Other:
Prepared By: Date:
☐ Drawing Checked Against Calculations ☐ Calculations Check Confirmed
REVIEW PHASE

Plotted: 5/11/2017 5:15:03 PM
Pen Table: HBR_RTWL.tbl
Design File: pw:\\stantec-sc-pw.bentley.com:stantec-sc-pw\Documents\01 Projects\HBR\Build Work\Design\07-Walls\07.01-Sheets\HBR_RET_RW406_PP01.dgn

NOTES:

1. SEE ROADWAY, BRIDGE, DRAINAGE, LIGHTING, AND BORING LOG SHEETS FOR ADDITIONAL INFORMATION.
2. REFER TO APPROVED AESTHETICS PLAN FOR AESTHETIC TREATMENT, LAYOUT, AND SURFACE FINISHES FOR WALL PANELS, COPING, RAIL, AND RIPRAP.
3. REFER TO TXDOT STANDARD RW(MSE), RW(TRF), AND RW(MSE)DD FOR ADDITIONAL INFORMATION. EMBANKMENT EARTH REINFORCEMENTS SHALL HAVE A MINIMUM LENGTH EQUAL TO OR GREATER THAN THE REQUIREMENTS SHOWN IN RW(MSE)DD.
4. WALL MANUFACTURER MAY ADJUST AND SHALL ACCOMMODATE ANY INLETS POSITIONED WITHIN THE REINFORCING ZONE OF THE MSE WALL. ADJUSTMENTS SHALL BE SHOWN IN THE SHOP DRAWINGS.
5. PROVIDE POSITIVE DRAINAGE DURING CONSTRUCTION AND POST CONSTRUCTION PERIOD.
6. SQUARE FOOT SURFACE AREA OF RETAINING WALL IS MEASURED FROM TOP OF WALL TO BOTTOM OF WALL UNLESS NOTED OTHERWISE.
7. THE UTILITY INFORMATION SHOWN IS NOT GUARANTEED TO BE ACCURATE OR ALL INCLUSIVE. CONTRACTOR SHALL VERIFY THE LOCATIONS OF ALL UTILITIES PRIOR TO CONSTRUCTION. THE CONTRACTOR IS RESPONSIBLE FOR ALL DAMAGES TO UTILITIES CAUSED BY CONSTRUCTION OPERATIONS.
8. NO CONSTRUCTION SHALL BEGIN UNTIL ALL REFERENCED SHEETS ARE APPROVED FOR CONSTRUCTION.

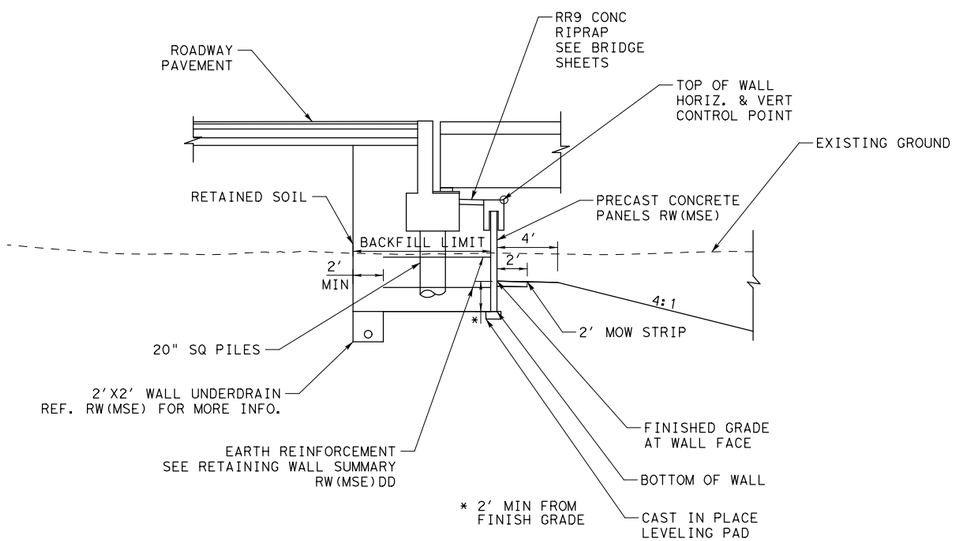

RW406 SECTION

STA 20+00.00 TO STA 20+72.32

RW406 ESTIMATED QUANTITES

ITEM	DESC	DESCRIPTION	QUANT.	UNITS
423	6001	RETAINING WALL (MSE)	506	SF
432	6045	RIPRAP (MOW STRIP) (4IN)	2	CY

NO.	REVISIONS	BY	DATE

PRELIMINARY
FOR REVIEW ONLY
THESE DOCUMENTS ARE PRELIMINARY AND SUBJECT TO CHANGE. THEY ARE NOT INTENDED FOR CONSTRUCTION OR BIDDING. THEY WERE PREPARED BY, OR UNDER THE SUPERVISION OF:
Engineer: JEFFREY E. WESANEN
P.E. No.: 117522
Date: 5/11/2017

PREFINAL SUBMITTAL

NOT FOR CONSTRUCTION

US 181 HARBOR BRIDGE

RETAINING WALL SECTION & DETAILS RW406 (PACKAGE 4.0.01)

SCALE: 1"=10'

FLATIRON/DRAGADOS LLC

Stantec
Engineered by Stantec Consulting Services Inc.
Texas Registered Engineering Firm F-6324

Texas Department of Transportation
© 2017
SHEET 1 OF 1

FED. RD. DIV. NO.	FEDERAL AID PROJECT NO.		SHEET NO.
6	HP X597(1)		RTWL 014
STATE	STATE DIST. NO.	COUNTY	
TEXAS	CRP	NUECES	
CONT.	SECT	JOB	HIGHWAY NO.
0101	06	095	US181

PROJECT
US 181 HARBOR BRIDGE

Checked by: Date:
Back-Checked by: Date:
Corrected by: Date:
Verified by: Date:

REVIEW PHASE
☐ Detail Check ☐ Internal Review ☐ Design Review ☐ TxDOT
☐ Drawing ☐ Report ☐ Other:
Prepared By: Date:
☐ Drawing Checked Against Calculations ☐ Calculations Check Confirmed

Plotted: 5/11/2017 5:15:16 PM
Pen Table: HBR_RTWL.tbl
Design File: pw:\\stantec-sc-pw.bentley.com:stantec-sc-pw\Documents\01 Projects\HBR\Build Work\Design\07-Walls\07.01-Sheets\HBR_RET_RW406_DT01.dgn

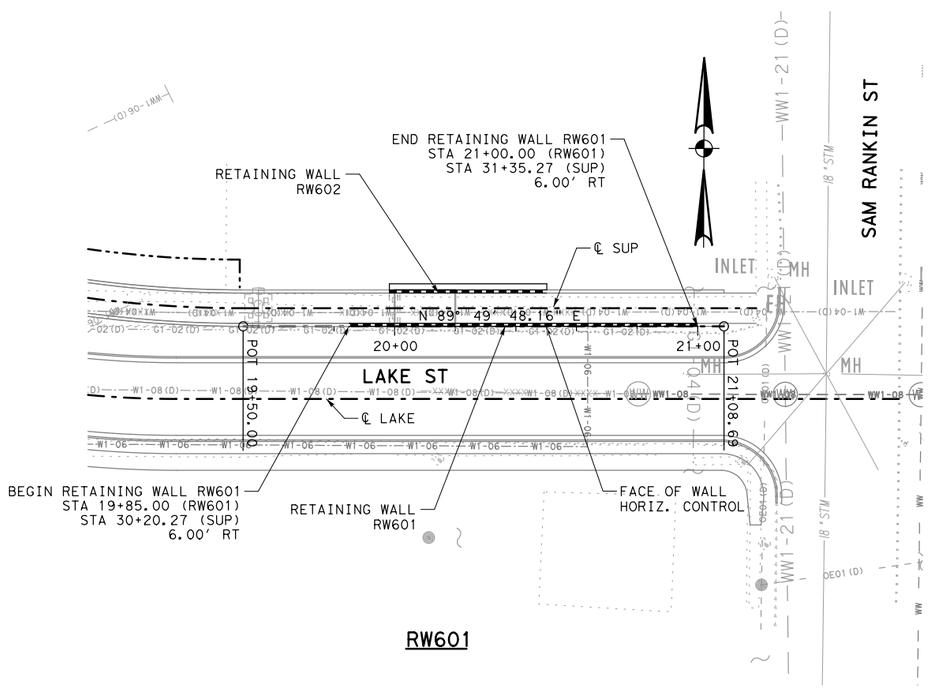

RW601

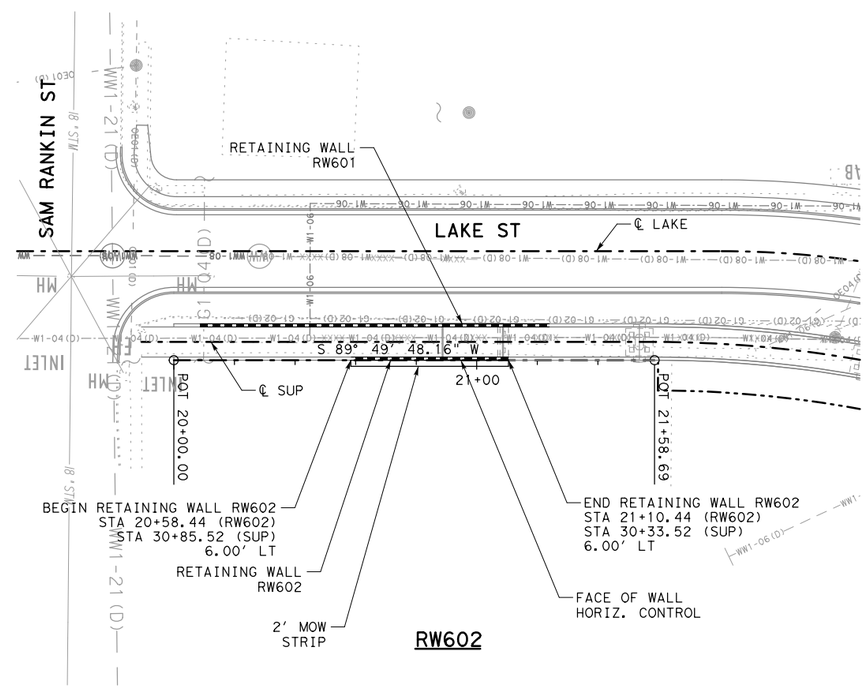

RW602

LEGEND

- PROPOSED TRAFFIC
- PROPOSED RETAINING WALL
- RWXXX-1 HORIZONTAL CURVE
- BORE LOCATION
- TEMPORARY SPL SHORING

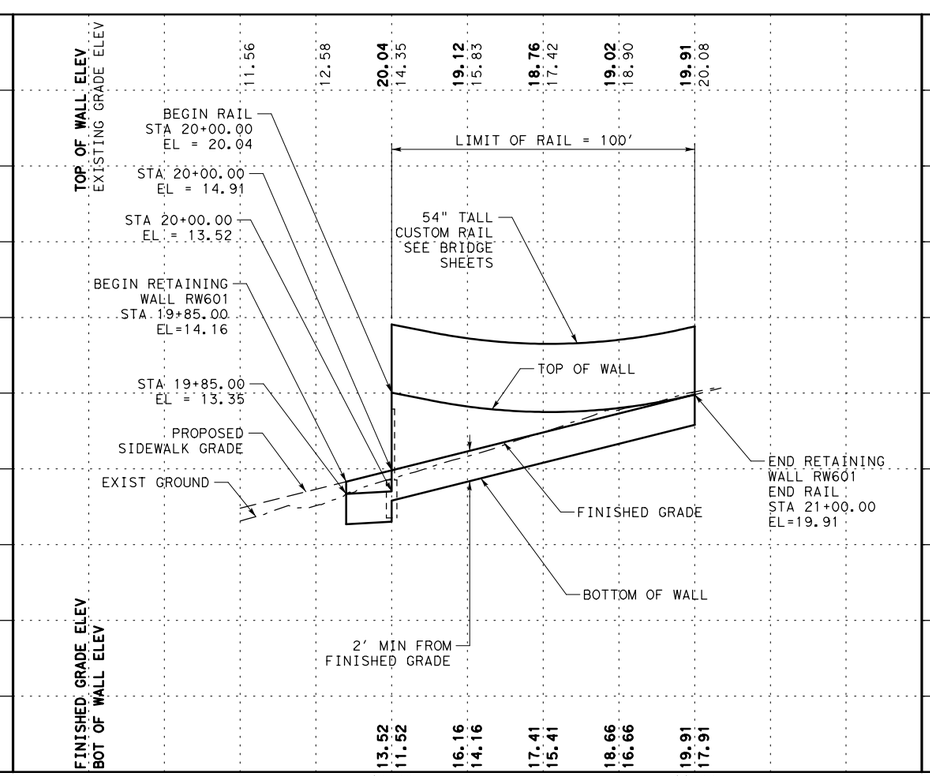

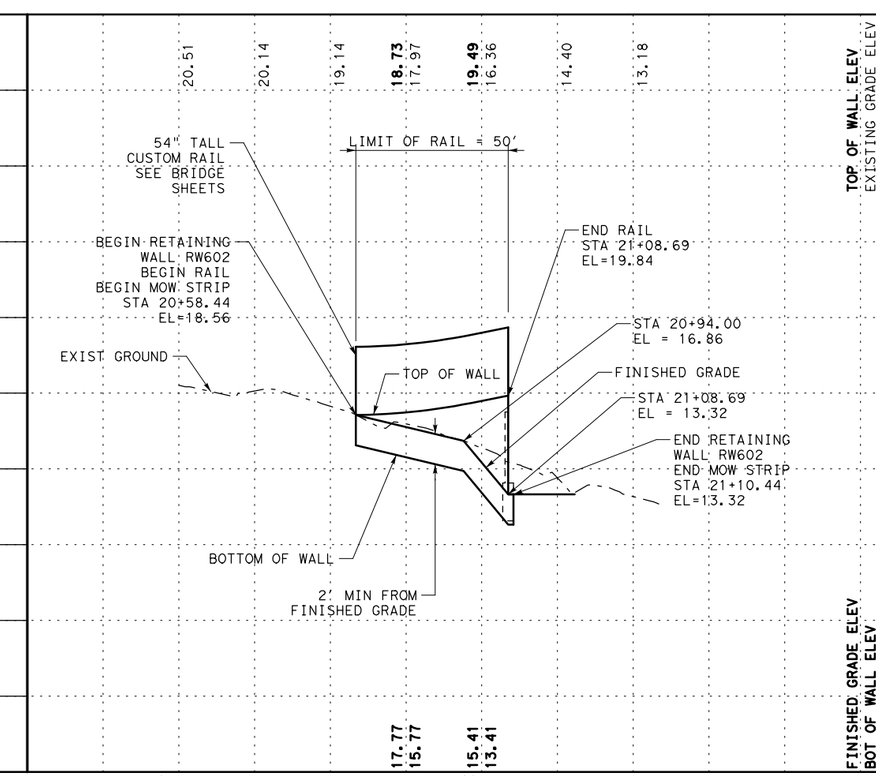

NO.	REVISIONS	BY	DATE

PRELIMINARY
FOR REVIEW ONLY
THESE DOCUMENTS ARE PRELIMINARY AND SUBJECT TO CHANGE. THEY ARE NOT INTENDED FOR CONSTRUCTION OR BIDDING. THEY WERE PREPARED BY, OR UNDER THE SUPERVISION OF:
Engineer: JEFFREY E. WESANEN
P.E. No.: 117522
Date: 5/11/2017

PREFINAL SUBMITTAL

NOT FOR CONSTRUCTION

US 181 HARBOR BRIDGE

RETAINING WALL LAYOUT RW601 & RW602 (PACKAGE 4.0.01)

SCALE: 1"=50' H
1"=10' V

FLATIRON/DRAGADOS LLC

Stantec
Engineered by Stantec Consulting Services Inc.
Texas Registered Engineering Firm F-6324

Texas Department of Transportation
© 2017

SHEET 1 OF 1

FED. RD. DIV. NO.	FEDERAL AID PROJECT NO.		SHEET NO.
6	HP X597(1)		RTWL 015
STATE	STATE DIST. NO.	COUNTY	
TEXAS	CRP	NUECES	
CONT.	SECT	JOB	HIGHWAY NO.
0101	06	095	US181

PROJECT
US 181 HARBOR BRIDGE

Checked by: Date:
Back-Checked by: Date:
Corrected by: Date:
Verified by: Date:

☐ TxDOT
☐ Detail Check ☐ Internal Review ☐ Design Review
☐ Drawing ☐ Report ☐ Other:
Prepared By: Date:
☐ Drawing Checked Against Calculations ☐ Calculations Check Confirmed
REVIEW PHASE

Plotted: 5/11/2017 5:15:44 PM
Pen Table: HBR_RTWL.tbl
Design File: pw:\\stantec-sc-pw.bentley.com:stantec-sc-pw\Documents\01 Projects\HBR\Build Work\Design\07-Walls\07.01-Sheets\HBR_RET_RW601_PP01.dgn

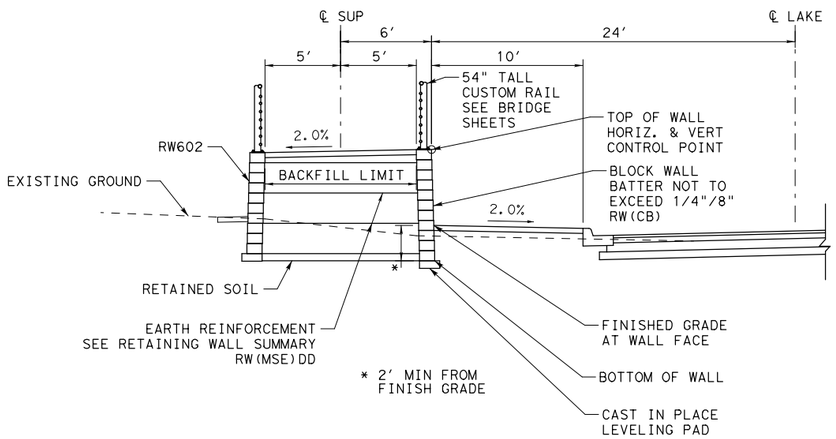

RW601 SECTION

STA 19+85.00 TO STA 21+00.00

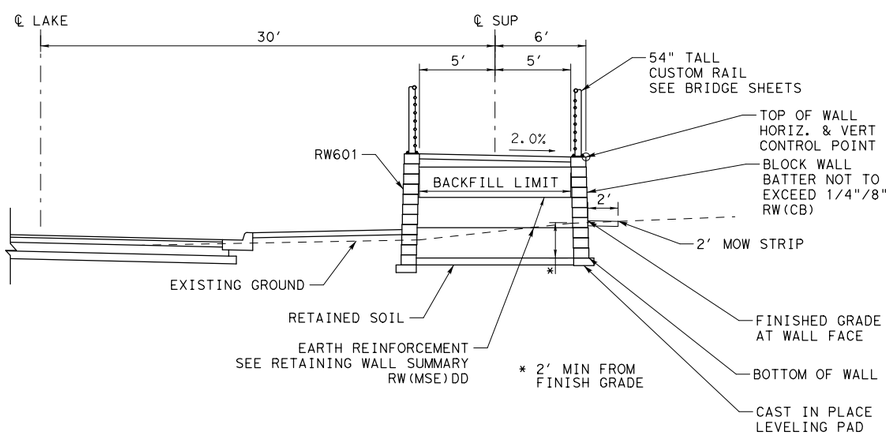

RW602 SECTION

STA 20+58.44 TO STA 21+10.44

NOTES:

1. SEE ROADWAY, BRIDGE, DRAINAGE, LIGHTING, AND BORING LOG SHEETS FOR ADDITIONAL INFORMATION.
2. REFER TO APPROVED AESTHETICS PLAN FOR AESTHETIC TREATMENT, LAYOUT, AND SURFACE FINISHES FOR WALL, RAIL, AND RIPRAP.
3. REFER TO TXDOT STANDARD RW(CB) AND RW(MSE)DD FOR ADDITIONAL INFORMATION. EMBANKMENT EARTH REINFORCEMENTS SHALL HAVE A MINIMUM LENGTH EQUAL TO OR GREATER THAN THE REQUIREMENTS SHOWN IN RW(MSE)DD.
4. WALL MANUFACTURER MAY ADJUST AND SHALL ACCOMMODATE ANY INLETS POSITIONED WITHIN THE REINFORCING ZONE OF THE MSE WALL. ADJUSTMENTS SHALL BE SHOWN IN THE SHOP DRAWINGS.
5. PROVIDE POSITIVE DRAINAGE DURING CONSTRUCTION AND POST CONSTRUCTION PERIOD.
6. SQUARE FOOT SURFACE AREA OF RETAINING WALL IS MEASURED FROM TOP OF WALL TO BOTTOM OF WALL UNLESS NOTED OTHERWISE.
7. THE UTILITY INFORMATION SHOWN IS NOT GUARANTEED TO BE ACCURATE OR ALL INCLUSIVE. CONTRACTOR SHALL VERIFY THE LOCATIONS OF ALL UTILITIES PRIOR TO CONSTRUCTION. THE CONTRACTOR IS RESPONSIBLE FOR ALL DAMAGES TO UTILITIES CAUSED BY CONSTRUCTION OPERATIONS.
8. NO CONSTRUCTION SHALL BEGIN UNTIL ALL REFERENCED SHEETS ARE APPROVED FOR CONSTRUCTION.

RW601 ESTIMATED QUANTITES

ITEM	DESC	DESCRIPTION	QUANT.	UNITS
423	6004	RETAINING WALL (CONC BLOCK)	423	SF
450	6060	RAIL (TY PR1) (MOD)	100	LF

RW602 ESTIMATED QUANTITES

ITEM	DESC	DESCRIPTION	QUANT.	UNITS
423	6004	RETAINING WALL (CONC BLOCK)	209	SF
432	6045	RIPRAP (MOW STRIP) (4IN)	2	CY
450	6060	RAIL (TY PR1) (MOD)	50	LF

NO.	REVISIONS	BY	DATE

PRELIMINARY
FOR REVIEW ONLY
THESE DOCUMENTS ARE PRELIMINARY AND SUBJECT TO CHANGE. THEY ARE NOT INTENDED FOR CONSTRUCTION OR BIDDING. THEY WERE PREPARED BY, OR UNDER THE SUPERVISION OF:
Engineer: JEFFREY E. WESANEN
P.E. No.: 117522
Date: 5/11/2017

PREFINAL SUBMITTAL

NOT FOR CONSTRUCTION

US 181 HARBOR BRIDGE

RETAINING WALL SECTION & DETAILS RW601 & RW602 (PACKAGE 4.0.01)

SCALE: 1"=10′

FLATIRON/DRAGADOS LLC

Stantec
Engineered by Stantec Consulting Services Inc.
Texas Registered Engineering Firm F-6324

Texas Department of Transportation
© 2017
SHEET 1 OF 1

FED. RD. DIV. NO.	FEDERAL AID PROJECT NO.		SHEET NO.
6	HP X597(1)		RTWL 016
STATE	STATE DIST. NO.	COUNTY	
TEXAS	CRP	NUECES	
CONT.	SECT	JOB	HIGHWAY NO.
0101	06	095	US181

PROJECT
US 181 HARBOR BRIDGE

Checked by: Date:
Back-Checked by: Date:
Corrected by: Date:
Verified by: Date:

☐ Detail Check ☐ Internal Review ☐ Design Review ☐ TxDOT
☐ Drawing ☐ Report ☐ Other:
Prepared By: Date:
☐ Drawing Checked Against Calculations ☐ Calculations Check Confirmed
REVIEW PHASE

Plotted: 5/11/2017 5:15:57 PM
Pen Table: HBR_RTWL.tbl
Design File: pw:\\stantec-sc-pw.bentley.com:stantec-sc-pw\Documents\01 Projects\HBR\Build Work\Design\07-Walls\07.01-Sheets\HBR_RET_RW601_DT01.dgn

RW102-1

P.I. STA 21+43.01
Δ = 0° 51′ 01.57″ (RT)
T = 56.63
L = 113.27
R = 7630.94
P.C. STA 20+86.37
P.T. STA 21+99.64
TANGENT BRG @ PC = S 31° 33′ 38.69″ W
TANGENT BRG @ PT = S 32° 24′ 40.26″ W

RW102-2

P.I. STA 22+55.30
Δ = 0° 50′ 02.39″ (LT)
T = 55.66
L = 111.32
R = 7647.94
P.C. STA 21+99.64
P.T. STA 23+10.96
TANGENT BRG @ PC = S 32° 24′ 40.26″ W
TANGENT BRG @ PT = S 31° 34′ 37.87″ W

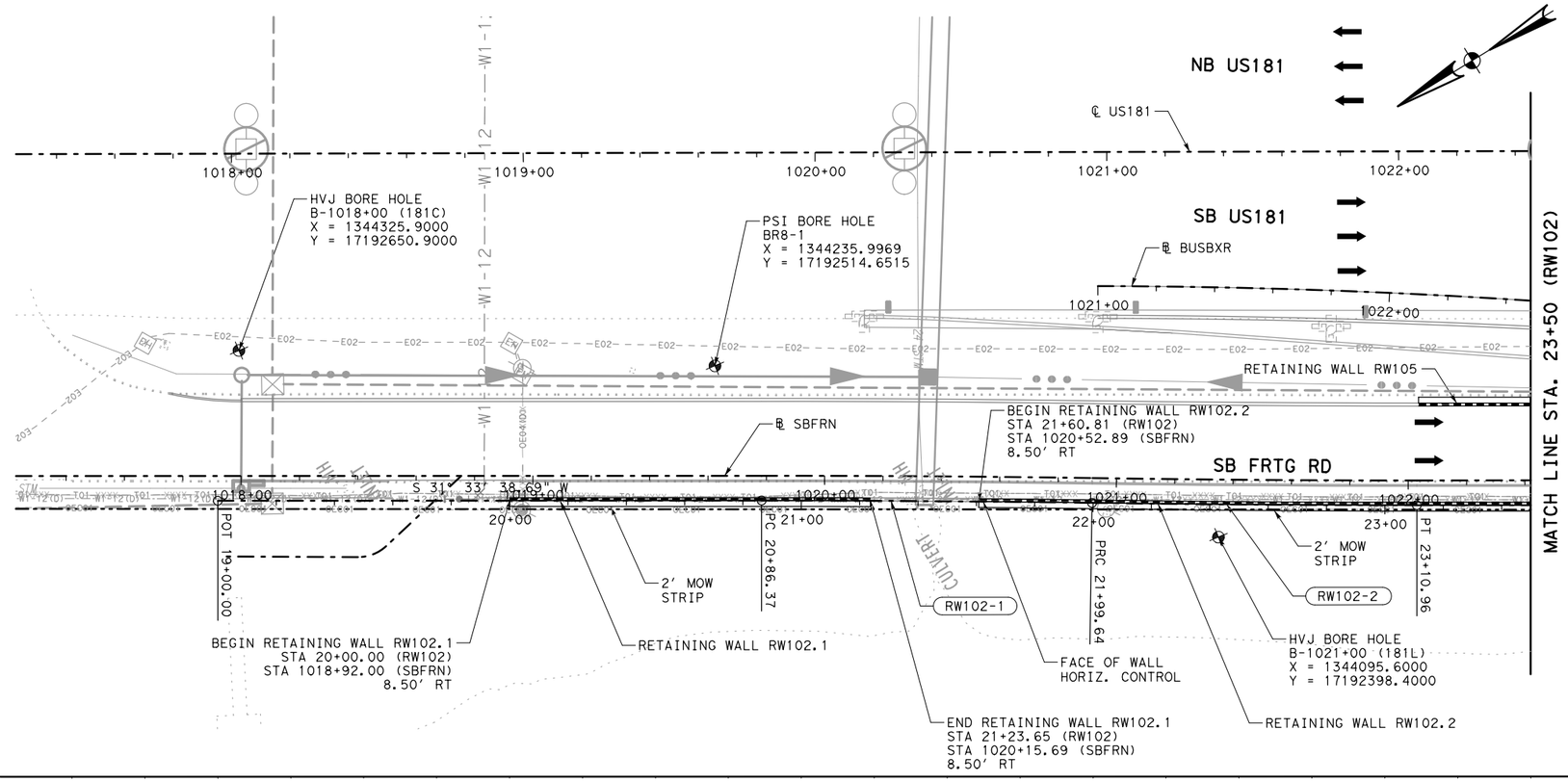

LEGEND

- PROPOSED TRAFFIC
- PROPOSED RETAINING WALL
- RWXXX-1 HORIZONTAL CURVE
- BORE LOCATION
- TEMPORARY SPL SHORING

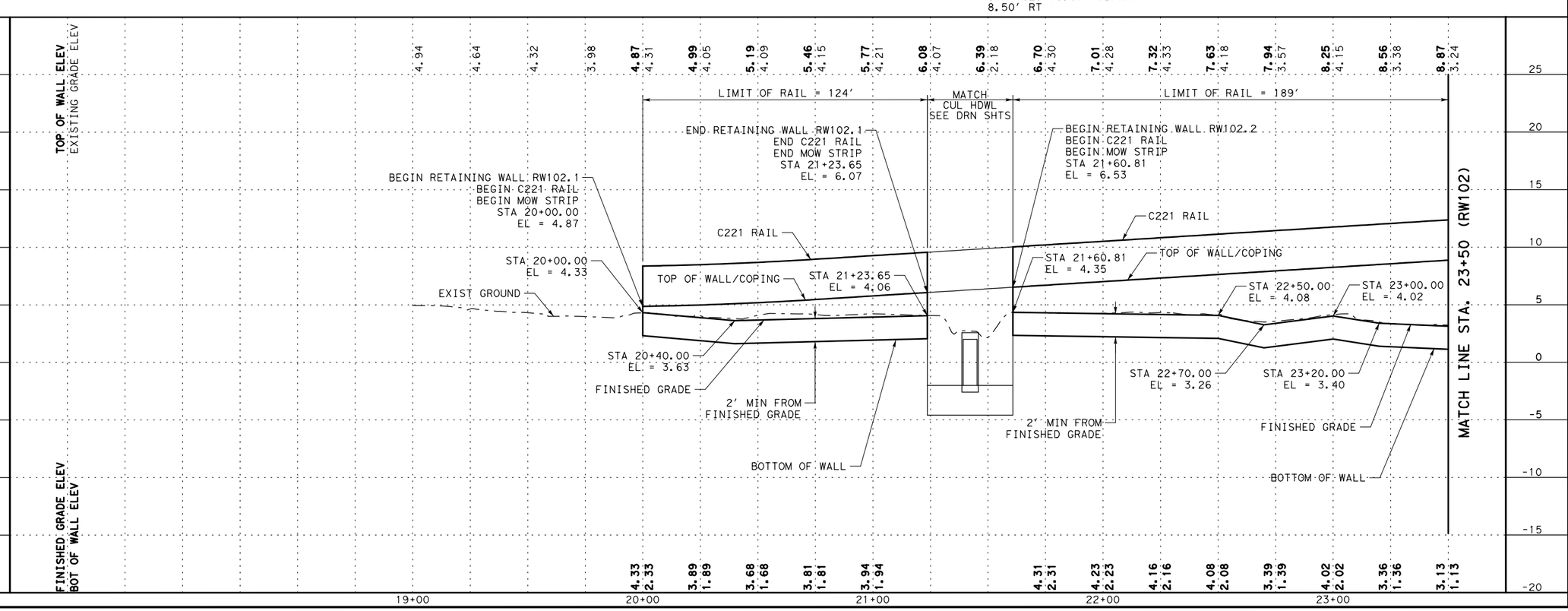

NO.	REVISIONS	BY	DATE

PRELIMINARY
FOR REVIEW ONLY
THESE DOCUMENTS ARE PRELIMINARY AND SUBJECT TO CHANGE. THEY ARE NOT INTENDED FOR CONSTRUCTION OR BIDDING. THEY WERE PREPARED BY, OR UNDER THE SUPERVISION OF:
Engineer: JEFFREY E. WESANEN
P.E. No.: 117522
Date: 4/17/2017

PREFINAL SUBMITTAL

NOT FOR CONSTRUCTION

US 181 HARBOR BRIDGE

RETAINING WALL LAYOUT RW102 (PACKAGE 1.0.01)

SCALE: 1"=50′ H
1"=10′ V

FLATIRON/DRAGADOS LLC

Stantec
Engineered by Stantec Consulting Services Inc.
Texas Registered Engineering Firm F-6324

Texas Department of Transportation
© 2017
SHEET 1 OF 5

FED. RD. DIV. NO.	FEDERAL AID PROJECT NO.		SHEET NO.
6	HP X597(1)		RTWL 001
STATE	STATE DIST. NO.	COUNTY	
TEXAS	CRP	NUECES	
CONT.	SECT	JOB	HIGHWAY NO.
0101	06	095	US181

PROJECT
US 181 HARBOR BRIDGE

REVIEW PHASE: ☐ Detail Check ☐ Internal Review ☐ Design Review ☐ TxDOT ☐ Drawing ☐ Report ☐ Other:

Prepared By: Date: ☐ Drawing Checked Against Calculations ☐ Calculations Check Confirmed

Checked by: Date: Back-Checked by: Date: Corrected by: Date: Verified by: Date:

Plotted: 4/17/2017 5:39:59 PM
Pen Table: HBR_RTWL.tbl
Design File: pw:\\stantec-sc-pw.bentley.com:stantec-sc-pw\Documents\01 Projects\HBR\Build Work\Design\07-Walls\07.01-Sheets\HBR_RET_RW102_PP01.dgn

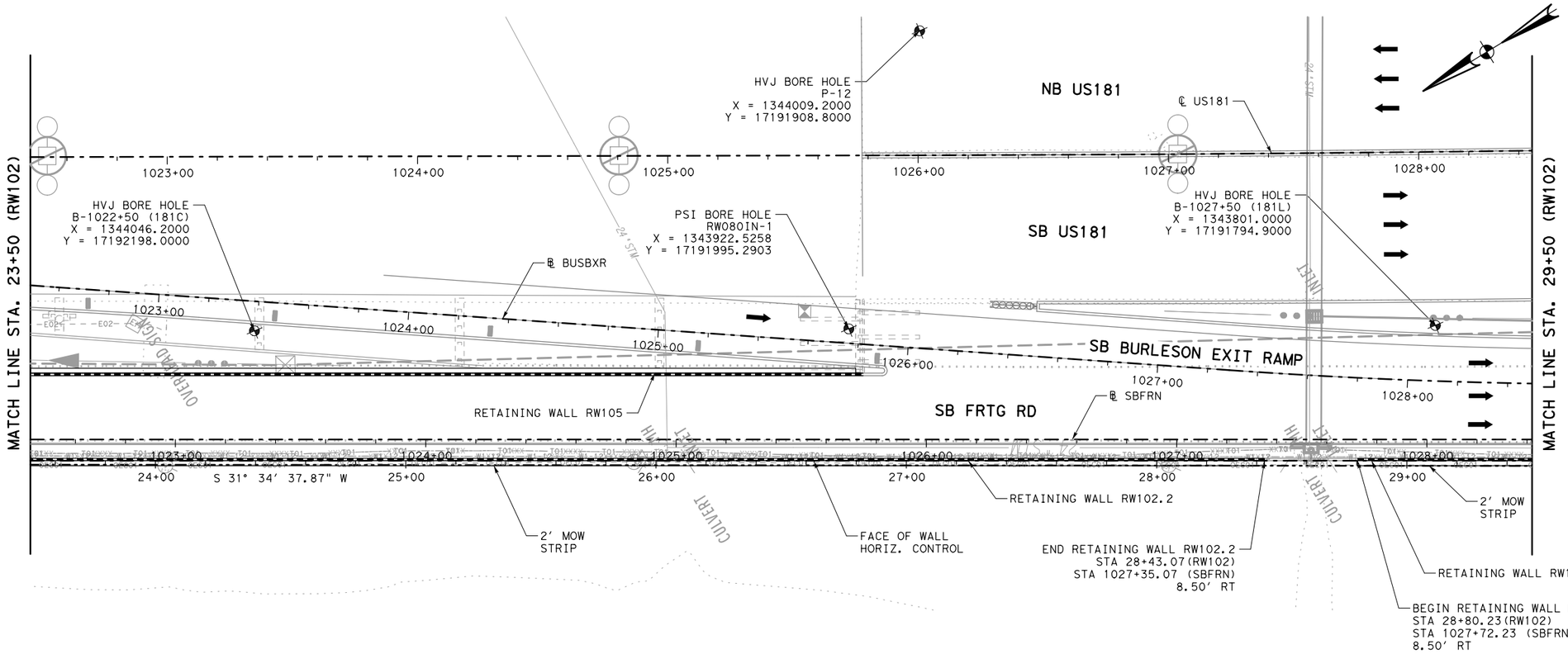

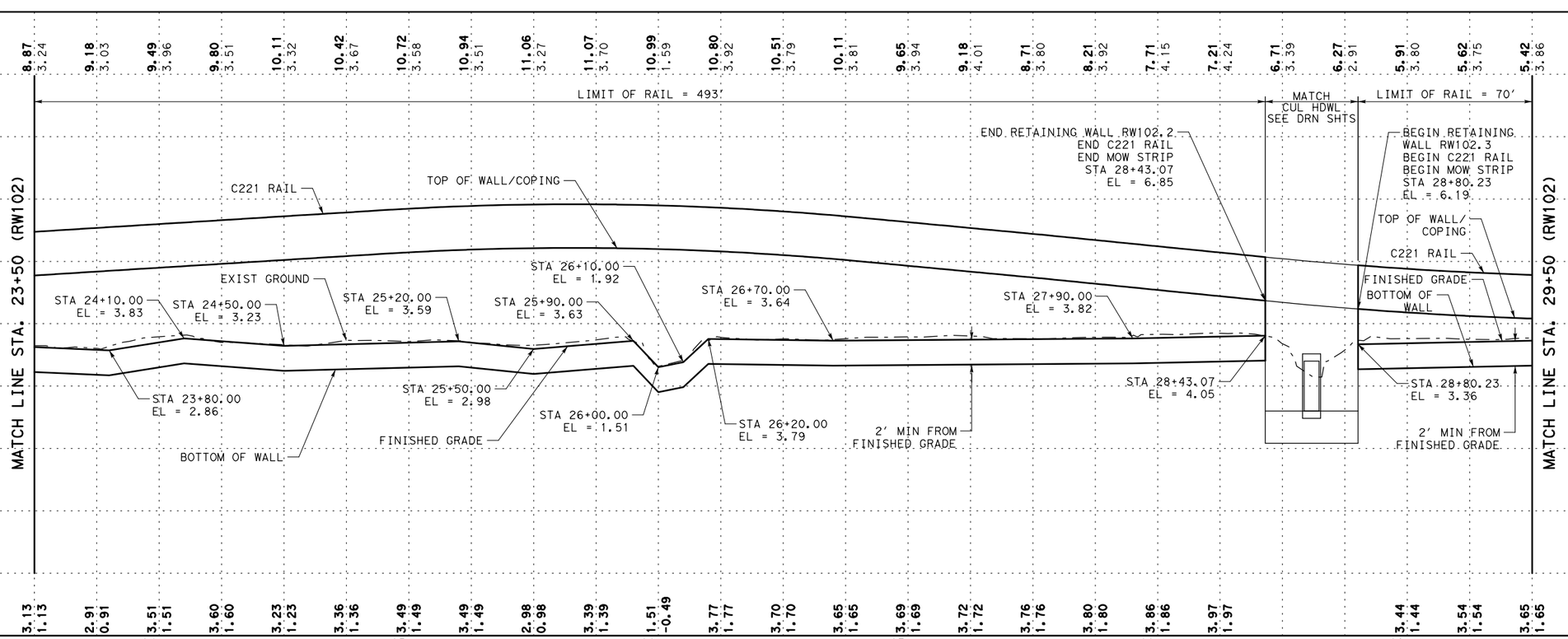

NO.	REVISIONS	BY	DATE

PRELIMINARY
FOR REVIEW ONLY
THESE DOCUMENTS ARE PRELIMINARY AND SUBJECT TO CHANGE. THEY ARE NOT INTENDED FOR CONSTRUCTION OR BIDDING. THEY WERE PREPARED BY, OR UNDER THE SUPERVISION OF:
Engineer: JEFFREY E. WESANEN
P.E. No.: 117522
Date: 4/17/2017

PREFINAL SUBMITTAL
NOT FOR CONSTRUCTION

US 181 HARBOR BRIDGE

RETAINING WAL LAYOUT RW102 (PACKAGE 1.0.01)

SCALE: 1"=50' H
1"=10' V

FLATIRON/DRAGADOS LLC

Stantec
Engineered by Stantec Consulting Services Inc.
Texas Registered Engineering Firm F-6324

Texas Department of Transportation
© 2017
SHEET 2 OF 5

FED. RD. DIV. NO.	FEDERAL AID PROJECT NO.		SHEET NO.
6	HP X597(1)		RTWL 002
STATE	STATE DIST. NO.	COUNTY	
TEXAS	CRP	NUECES	
CONT.	SECT	JOB	HIGHWAY NO.
0101	06	095	US181

PROJECT
US 181 HARBOR BRIDGE

Checked by: Date:
Back-Checked by: Date:
Corrected by: Date:
Verified by: Date:

☐ Detail Check ☐ Internal Review ☐ Design Review ☐ TxDOT
☐ Drawing ☐ Report ☐ Other:
Prepared By: Date:
☐ Drawing Checked Against Calculations ☐ Calculations Check Confirmed
REVIEW PHASE

Plotted: 4/17/2017 5:40:06 PM
Pen Table: HBR_RTWL.tbl
Design File: pw:\\stantec-sc-pw.bentley.com:stantec-sc-pw\Documents\01 Projects\HBR\Build Work\Design\07-Walls\07.01-Sheets\HBR_RET_RW102_PP02.dgn

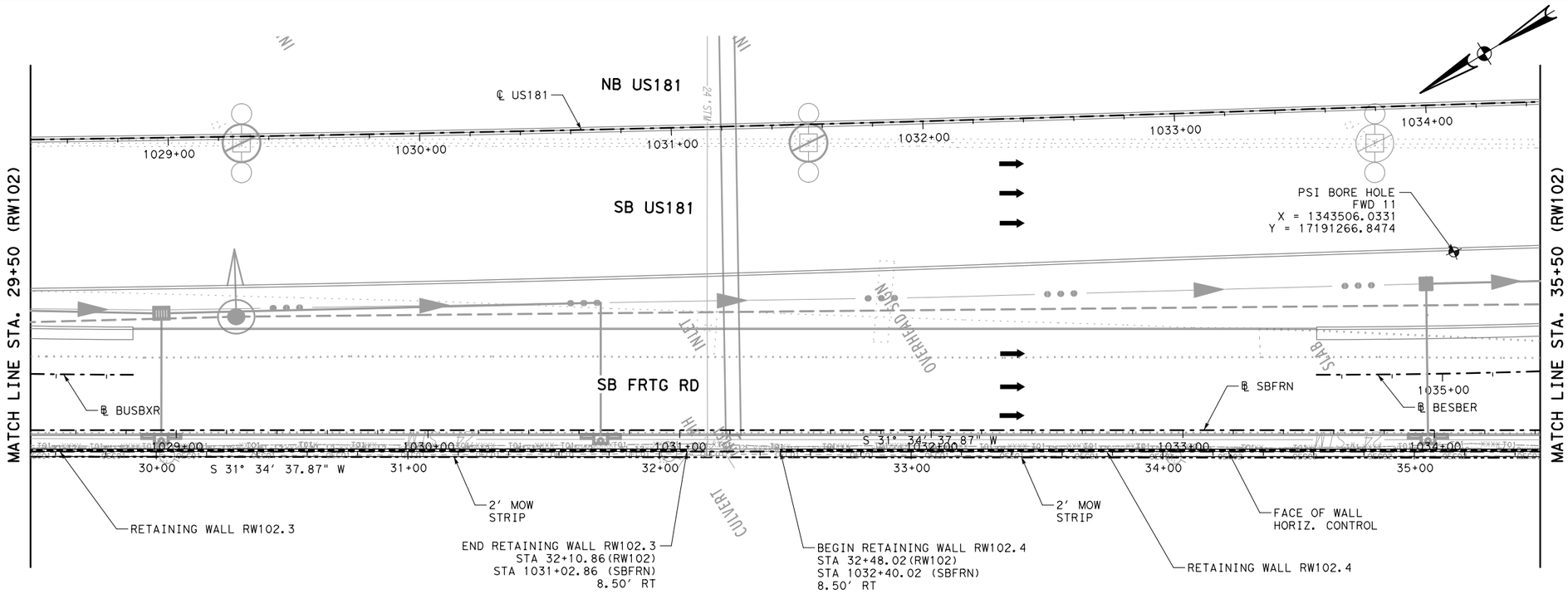

LEGEND

- PROPOSED TRAFFIC
- PROPOSED RETAINING WALL
- RWXXX-1 HORIZONTAL CURVE
- BORE LOCATION
- TEMPORARY SPL SHORING

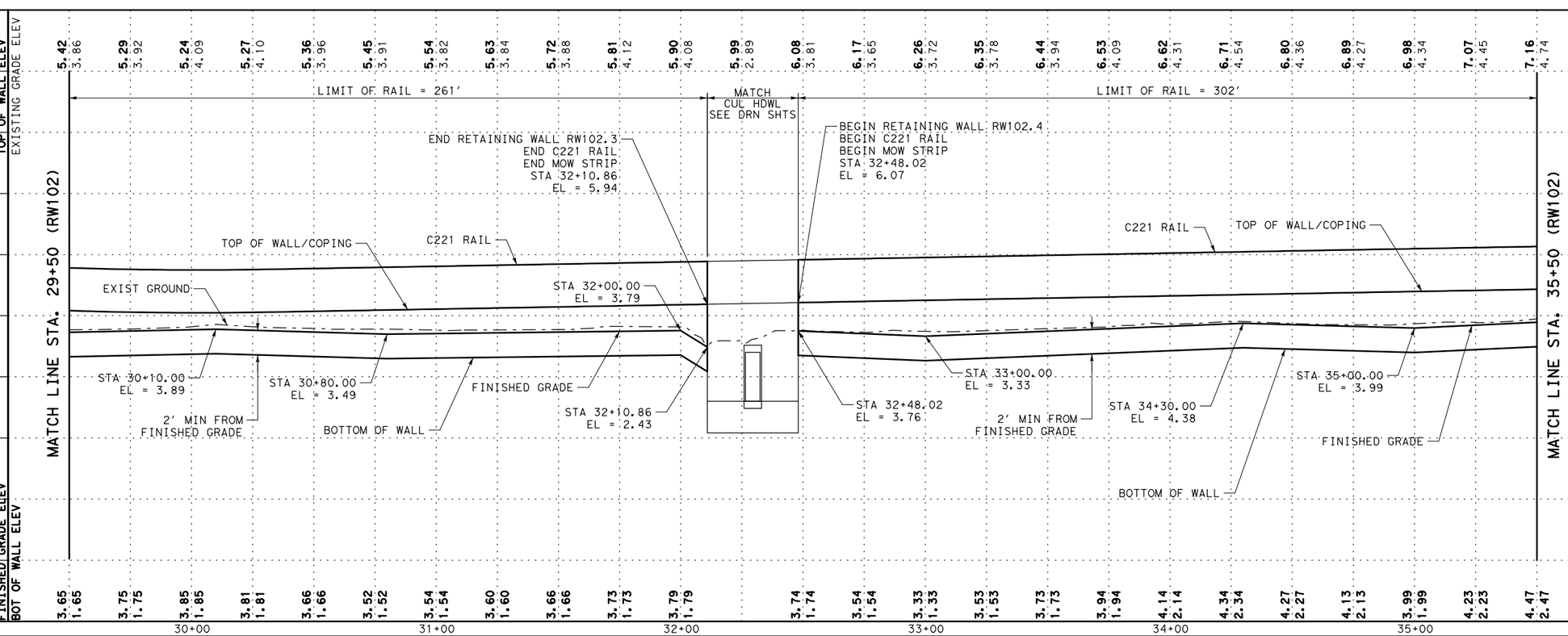

NO.	REVISIONS	BY	DATE

PRELIMINARY
FOR REVIEW ONLY
THESE DOCUMENTS ARE PRELIMINARY AND SUBJECT TO CHANGE. THEY ARE NOT INTENDED FOR CONSTRUCTION OR BIDDING. THEY WERE PREPARED BY, OR UNDER THE SUPERVISION OF:
Engineer: JEFFREY E. WESANEN
P.E. No.: 117522
Date: 4/17/2017

4/17/2017

PREFINAL SUBMITTAL

NOT FOR CONSTRUCTION

US 181 HARBOR BRIDGE

RETAINING WALL LAYOUT RW102 (PACKAGE 1.0.01)

SCALE: 1"=50' H
1"=10' V

FLATIRON/DRAGADOS LLC

Stantec
Engineered by Stantec Consulting Services Inc.
Texas Registered Engineering Firm F-6324

Texas Department of Transportation
© 2017

SHEET 3 OF 5

FED. RD. DIV. NO.	FEDERAL AID PROJECT NO.		SHEET NO.
6	HP X597(1)		RTWL 003
STATE	STATE DIST. NO.	COUNTY	
TEXAS	CRP	NUECES	
CONT.	SECT	JOB	HIGHWAY NO.
0101	06	095	US181

PROJECT
US 181 HARBOR BRIDGE

Checked by: Date:
Back-Checked by: Date:
Corrected by: Date:
Verified by: Date:

☐ Detail Check ☐ Internal Review ☐ Design Review ☐ TxDOT
☐ Drawing ☐ Report ☐ Other:
Prepared By: Date:
☐ Drawing Checked Against Calculations ☐ Calculations Check Confirmed

REVIEW PHASE

Plotted: 4/17/2017 5:40:13 PM
Pen Table: HBR_RTWL.tbl
Design File: pw:\\stantec-sc-pw.bentley.com:stantec-sc-pw\Documents\01 Projects\HBR\Build Work\Design\07-Walls\07.01-Sheets\HBR_RET_RW102_PP03.dgn

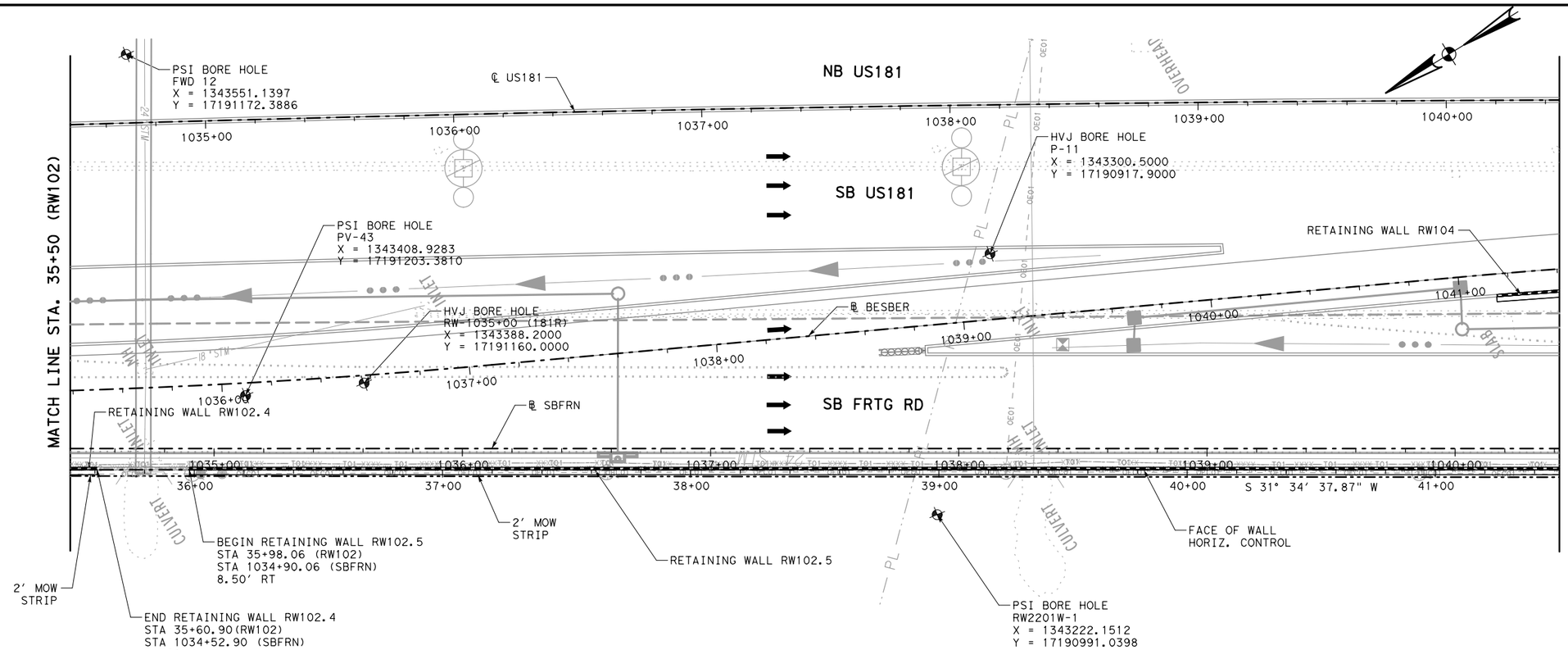

LEGEND

- PROPOSED TRAFFIC
- PROPOSED RETAINING WALL
- RWXXX-1 HORIZONTAL CURVE
- BORE LOCATION
- TEMPORARY SPL SHORING

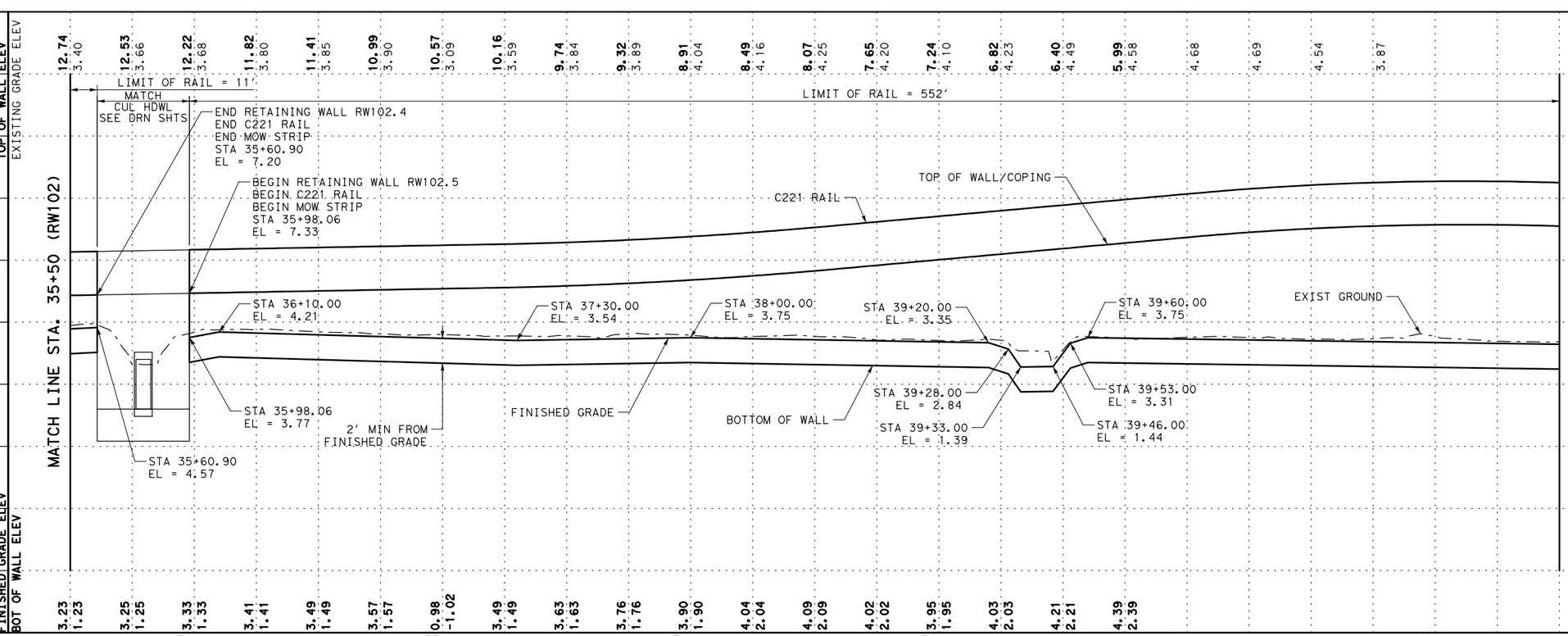

NO.	REVISIONS	BY	DATE

PRELIMINARY
FOR REVIEW ONLY
THESE DOCUMENTS ARE PRELIMINARY AND SUBJECT TO CHANGE. THEY ARE NOT INTENDED FOR CONSTRUCTION OR BIDDING. THEY WERE PREPARED BY, OR UNDER THE SUPERVISION OF:
Engineer: JEFFREY E. WESANEN
P.E. No.: 117522
Date: 4/17/2017

PREFINAL SUBMITTAL
NOT FOR CONSTRUCTION

US 181 HARBOR BRIDGE

RETAINING WALL LAYOUT RW102 (PACKAGE 1.0.01)

SCALE: 1"=50' H
1"=10' V

FLATIRON/DRAGADOS LLC

Stantec
Engineered by Stantec Consulting Services Inc.
Texas Registered Engineering Firm F-6324

Texas Department of Transportation
© 2017

SHEET 4 OF 5

FED. RD. DIV. NO.	FEDERAL AID PROJECT NO.		SHEET NO.
6	HP X597(1)		RTWL 004
STATE	STATE DIST. NO.	COUNTY	
TEXAS	CRP	NUECES	
CONT.	SECT	JOB	HIGHWAY NO.
0101	06	095	US181

PROJECT
US 181 HARBOR BRIDGE

Checked by: Date:
Back-Checked by: Date:
Corrected by: Date:
Verified by: Date:

☐ Detail Check ☐ Internal Review ☐ Design Review ☐ TxDOT
☐ Drawing ☐ Report ☐ Other:
Prepared By: Date:
☐ Drawing Checked Against Calculations ☐ Calculations Check Confirmed

REVIEW PHASE

Plotted: 4/17/2017 5:40:20 PM
Pen Table: HBR_RTWL.tbl
Design File: pw:\\stantec-sc-pw.bentley.com:stantec-sc-pw\Documents\01 Projects\HBR\Build Work\Design\07-Walls\07.01-Sheets\HBR_RET_RW102_PP04.dgn

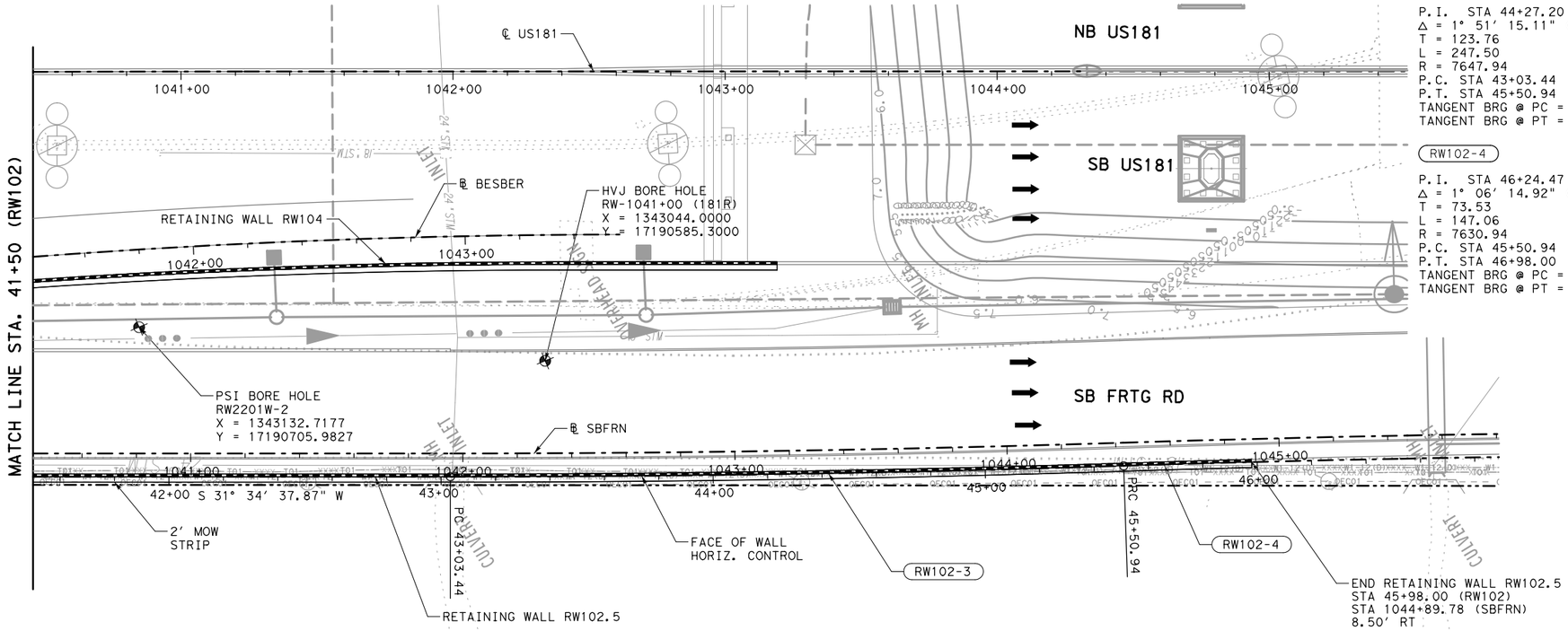

RW102-3

P.I. STA 44+27.20
Δ = 1° 51' 15.11" (LT)
T = 123.76
L = 247.50
R = 7647.94
P.C. STA 43+03.44
P.T. STA 45+50.94
TANGENT BRG @ PC = S 31° 34' 37.87" W
TANGENT BRG @ PT = S 29° 43' 22.76" W

RW102-4

P.I. STA 46+24.47
Δ = 1° 06' 14.92" (RT)
T = 73.53
L = 147.06
R = 7630.94
P.C. STA 45+50.94
P.T. STA 46+98.00
TANGENT BRG @ PC = S 29° 43' 22.76" W
TANGENT BRG @ PT = S 30° 49' 37.68" W

LEGEND

- PROPOSED TRAFFIC
- PROPOSED RETAINING WALL
- RWXXX-1 HORIZONTAL CURVE
- BORE LOCATION
- TEMPORARY SPL SHORING

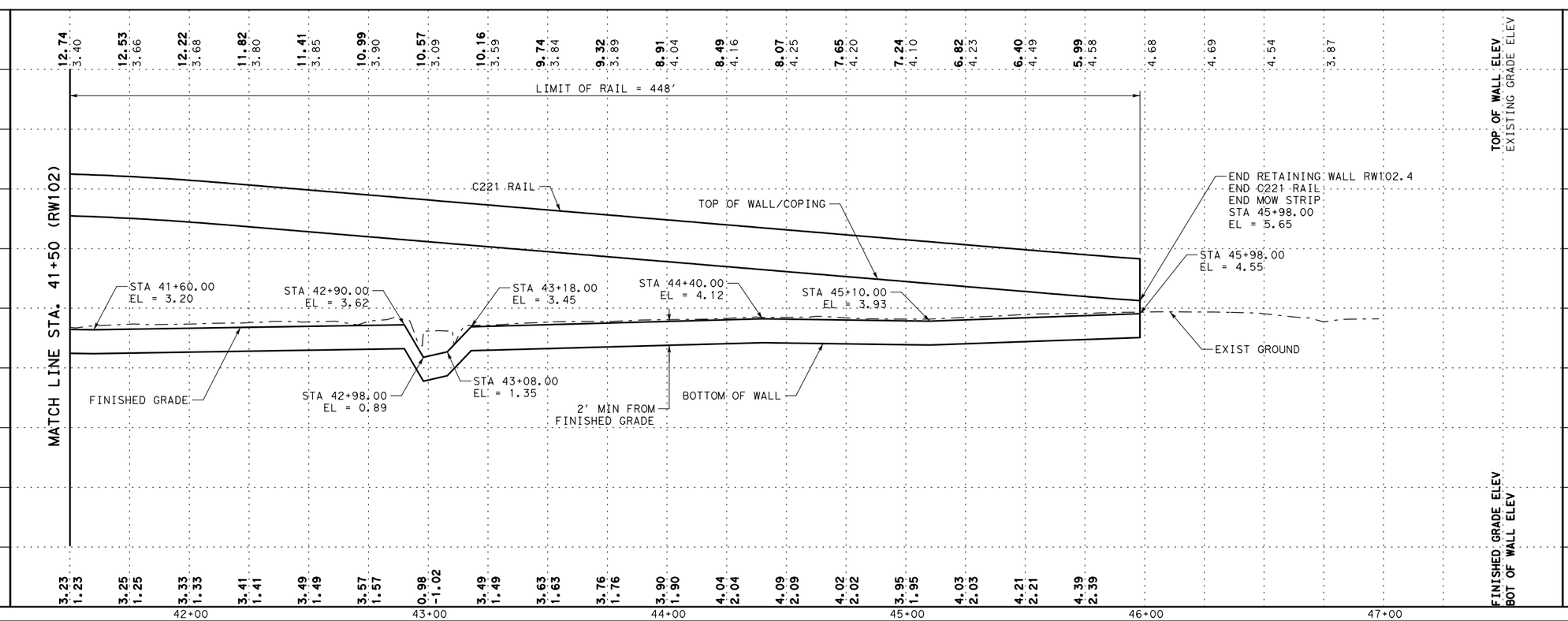

NO.	REVISIONS	BY	DATE

PRELIMINARY
FOR REVIEW ONLY
THESE DOCUMENTS ARE PRELIMINARY AND SUBJECT TO CHANGE. THEY ARE NOT INTENDED FOR CONSTRUCTION OR BIDDING. THEY WERE PREPARED BY, OR UNDER THE SUPERVISION OF:
Engineer: JEFFREY E. WESANEN
P.E. No.: 117522
Date: 4/17/2017

PREFINAL SUBMITTAL

NOT FOR CONSTRUCTION

US 181 HARBOR BRIDGE

RETAINING WALL LAYOUT RW102 (PACKAGE 1.0.01)

SCALE: 1"=50' H
1"=10' V

FLATIRON/DRAGADOS LLC

Stantec
Engineered by Stantec Consulting Services Inc.
Texas Registered Engineering Firm F-6324

Texas Department of Transportation
© 2017

SHEET 5 OF 5

FED. RD. DIV. NO.	FEDERAL AID PROJECT NO.		SHEET NO.
6	HP X597(1)		RTWL 005
STATE	STATE DIST. NO.	COUNTY	
TEXAS	CRP	NUECES	
CONT.	SECT	JOB	HIGHWAY NO.
0101	06	095	US181

PROJECT
US 181 HARBOR BRIDGE

Checked by: Date:
Back-Checked by: Date:
Corrected by: Date:
Verified by: Date:

REVIEW PHASE: ☐ Detail Check ☐ Internal Review ☐ Design Review ☐ TxDOT ☐ Drawing ☐ Report ☐ Other:

Prepared By: Date:

☐ Drawing Checked Against Calculations ☐ Calculations Check Confirmed

Plotted: 4/17/2017 5:40:27 PM
Pen Table: HBR_RTWL.tbl
Design File: pw:\\stantec-sc-pw.bentley.com:stantec-sc-pw\Documents\01 Projects\HBR\Build Work\Design\07-Walls\07.01-Sheets\HBR_RET_RW102_PP05.dgn

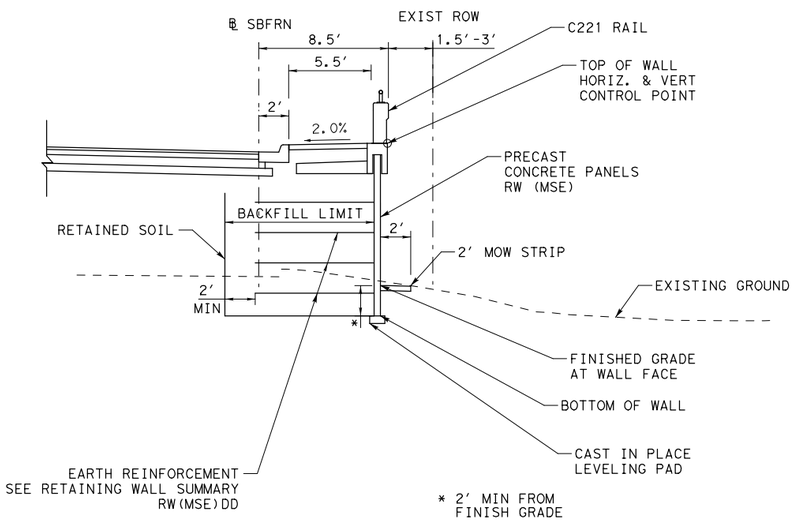

RW102 SECTION

RW102.1 : STA 20+00.00 TO STA 21+23.65
RW102.2 : STA 21+60.80 TO STA 28+43.07
RW102.3 : STA 28+80.23 TO STA 32+10.86
RW102.4 : STA 32+48.02 TO STA 35+60.90
RW102.5 : STA 35+98.06 TO STA 45+98.00

NOTES:

1. SEE ROADWAY, BRIDGE, DRAINAGE, LIGHTING, AND BORING LOG SHEETS FOR ADDITIONAL INFORMATION.
2. REFER TO APPROVED AESTHETICS PLAN FOR AESTHETIC TREATMENT, LAYOUT, AND SURFACE FINISHES FOR WALL PANELS, COPING, RAIL, AND RIPRAP.
3. REFER TO TXDOT STANDARD RW(MSE), RW(TRF), AND RW(MSE)DD FOR ADDITIONAL INFORMATION. EMBANKMENT EARTH REINFORCEMENTS SHALL HAVE A MINIMUM LENGTH EQUAL TO OR GREATER THAN THE REQUIREMENTS SHOWN IN RW(MSE)DD.
4. WALL MANUFACTURER MAY ADJUST AND SHALL ACCOMMODATE ANY INLETS POSITIONED WITHIN THE REINFORCING ZONE OF THE MSE WALL. ADJUSTMENTS SHALL BE SHOWN IN THE SHOP DRAWINGS.
5. PROVIDE POSITIVE DRAINAGE DURING CONSTRUCTION AND POST CONSTRUCTION PERIOD.
6. SQUARE FOOT SURFACE AREA OF RETAINING WALL IS MEASURED FROM TOP OF WALL TO BOTTOM OF WALL UNLESS NOTED OTHERWISE.
7. THE UTILITY INFORMATION SHOWN IS NOT GUARANTEED TO BE ACCURATE OR ALL INCLUSIVE. CONTRACTOR SHALL VERIFY THE LOCATIONS OF ALL UTILITIES PRIOR TO CONSTRUCTION. THE CONTRACTOR IS RESPONSIBLE FOR ALL DAMAGES TO UTILITIES CAUSED BY CONSTRUCTION OPERATIONS.
8. NO CONSTRUCTION SHALL BEGIN UNTIL ALL REFERENCED SHEETS ARE APPROVED FOR CONSTRUCTION.
9. BACKFILL SHALL BE TYPE DS.
10. CONTRACTOR SHALL INSTALL 2" WEEPHOLES WITH A 10′ MAXIMUM SACING. WEEPHOLES SHALL BE 3" MINIMUM ABOVE FINISHED GRADE.
11. WEEPHOLE COVERING SHALL BE ONE OF THE FOLLOWING MATERIAL TYPES:
    A. GALVANIZED STEEL WIRE CLOTH WITH 1/2" TO 1/4" MESH, MINIMUM WIRE DIAMETER OF 0.047".
    B. STAINLESS STEEL TYPE 304 OR 316 WITH 1/2" TO 1/4" MESH, MINIMUM WIRE DIAMETER OF 0.047".
    C. POLYETHYLENE OR POLYPROPYLENE GEONET WITH 0.15", MINIMUM THICKNESS, SUCH AS TENSAR DN-4 OR EQUAL.

RW102 ESTIMATED QUANTITES

ITEM	DESC	DESCRIPTION	QUANT.	UNITS
423	6001	RETAINING WALL (MSE)	16408	SF
432	6045	RIPRAP (MOW STRIP) (4IN)	61	CY
450	6030	RAIL (TY C221)	2450	LF

NO.	REVISIONS	BY	DATE

PRELIMINARY
FOR REVIEW ONLY
THESE DOCUMENTS ARE PRELIMINARY AND SUBJECT TO CHANGE. THEY ARE NOT INTENDED FOR CONSTRUCTION OR BIDDING. THEY WERE PREPARED BY, OR UNDER THE SUPERVISION OF:
Engineer: JEFFREY E. WESANEN
P.E. No.: 117522
Date: 4/17/2017

PREFINAL SUBMITTAL

NOT FOR CONSTRUCTION

US 181 HARBOR BRIDGE

RETAINING WALL SECTION & DETAILS RW102 (PACKAGE 1.0.01)

SCALE: 1"=10′

FLATIRON/DRAGADOS LLC

Stantec
Engineered by Stantec Consulting Services Inc.
Texas Registered Engineering Firm F-6324

Texas Department of Transportation
© 2017
SHEET 1 OF 1

FED. RD. DIV. NO.	FEDERAL AID PROJECT NO.		SHEET NO.
6	HP X597(1)		RTWL 006
STATE	STATE DIST. NO.	COUNTY	
TEXAS	CRP	NUECES	
CONT.	SECT	JOB	HIGHWAY NO.
0101	06	095	US181

PROJECT
US 181 HARBOR BRIDGE

Checked by: Date:
Back-Checked by: Date:
Corrected by: Date:
Verified by: Date:

REVIEW PHASE
☐ Detail Check ☐ Internal Review ☐ Design Review ☐ TxDOT
☐ Drawing ☐ Report ☐ Other:
Prepared By: Date:
☐ Drawing Checked Against Calculations ☐ Calculations Check Confirmed

Plotted: 4/17/2017 5:40:33 PM
Pen Table: HBR_RTWL.tbl
Design File: pw:\\stantec-sc-pw.bentley.com:stantec-sc-pw\Documents\01 Projects\HBR\Build Work\Design\07-Walls\07.01-Sheets\HBR_RET_RW102_DT01

LEGEND

- PROPOSED TRAFFIC
- PROPOSED RETAINING WALL
- RWXXX-1 HORIZONTAL CURVE
- BORE LOCATION
- TEMPORARY SPL SHORING

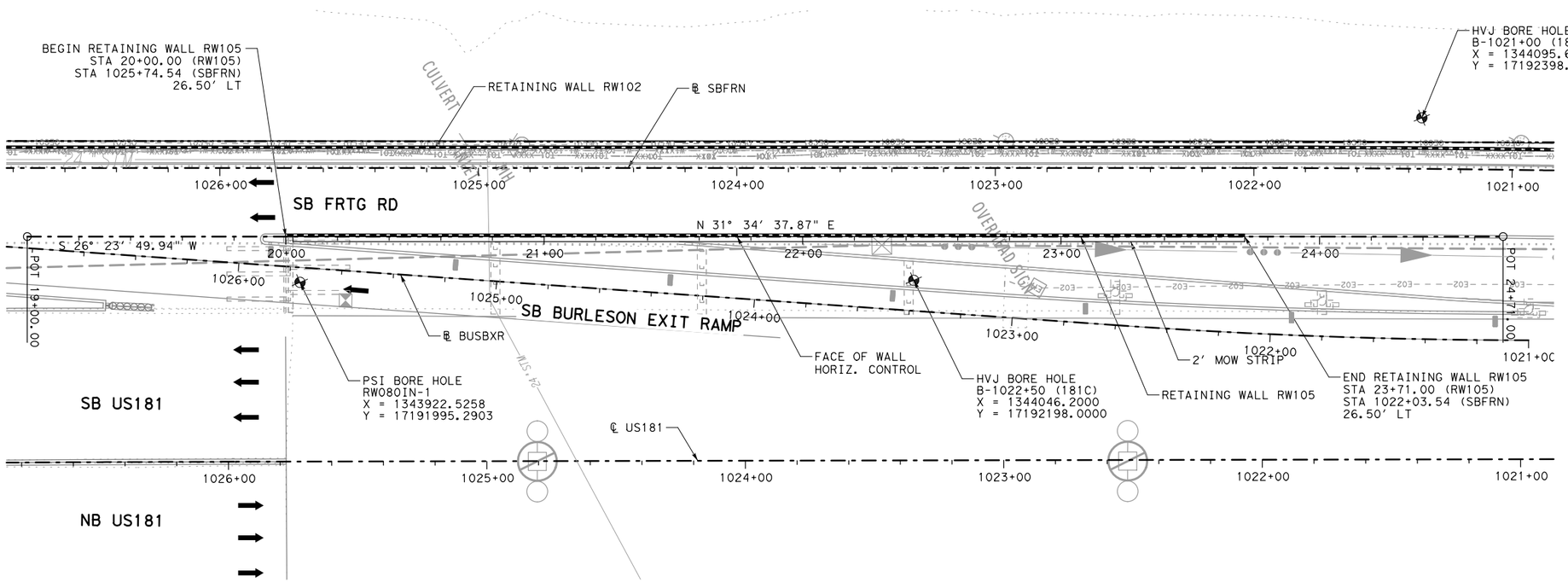

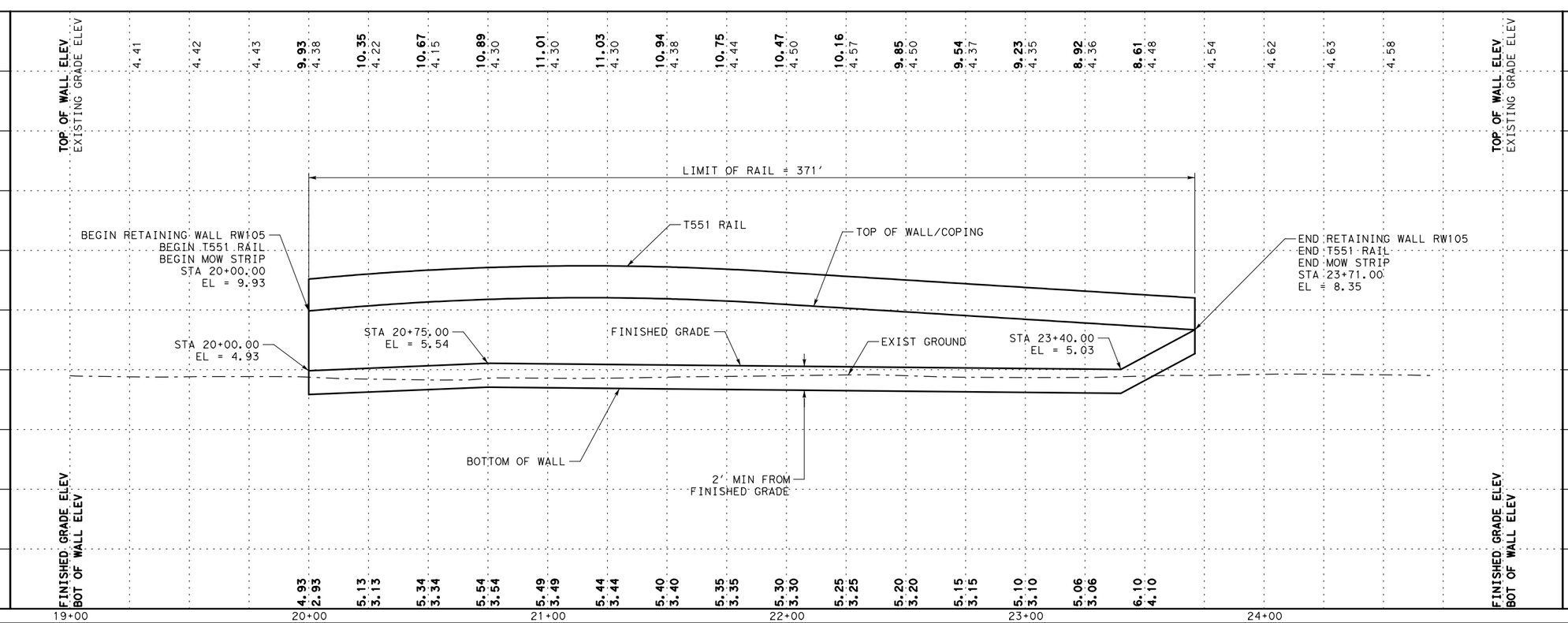

NO.	REVISIONS	BY	DATE

PRELIMINARY
FOR REVIEW ONLY
THESE DOCUMENTS ARE PRELIMINARY AND SUBJECT TO CHANGE. THEY ARE NOT INTENDED FOR CONSTRUCTION OR BIDDING. THEY WERE PREPARED BY, OR UNDER THE SUPERVISION OF:
Engineer: JEFFREY E. WESANEN
P.E. No.: 117522
Date: 4/17/2017

PREFINAL SUBMITTAL

NOT FOR CONSTRUCTION

US 181 HARBOR BRIDGE

RETAINING WALL LAYOUT RW105 (PACKAGE 1.0.01)

SCALE: 1"=50' H
1"=10' V

FLATIRON/DRAGADOS LLC

Stantec
Engineered by Stantec Consulting Services Inc.
Texas Registered Engineering Firm F-6324

Texas Department of Transportation
© 2017

SHEET 1 OF 1

FED. RD. DIV. NO.	FEDERAL AID PROJECT NO.		SHEET NO.
6	HP X597(1)		RTWL 007
STATE	STATE DIST. NO.	COUNTY	
TEXAS	CRP	NUECES	
CONT.	SECT	JOB	HIGHWAY NO.
0101	06	095	US181

PROJECT
US 181 HARBOR BRIDGE

Checked by: Date:
Back-Checked by: Date:
Corrected by: Date:
Verified by: Date:

☐ TxDOT
☐ Detail Check ☐ Internal Review ☐ Design Review
☐ Drawing ☐ Report ☐ Other:
Prepared By: Date:
☐ Drawing Checked Against Calculations ☐ Calculations Check Confirmed

REVIEW PHASE

Plotted: 4/17/2017 5:40:42 PM
Pen Table: HBR_RTWL.tbl
Design File: pw:\\stantec-sc-pw.bentley.com:stantec-sc-pw\Documents\01 Projects\HBR\Build Work\Design\07-Walls\07.01-Sheets\HBR_RET_RW105_PP01.dgn

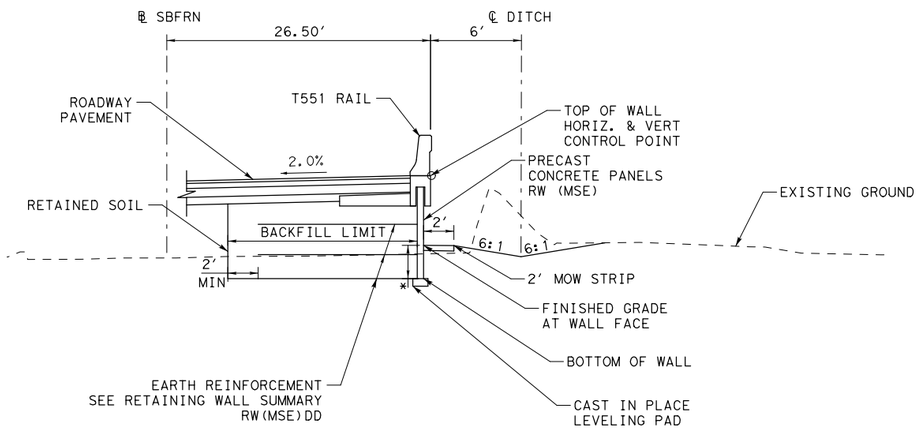

RW105 SECTION

STA 20+00.00 TO STA 23+71.00

NOTES:

1. SEE ROADWAY, BRIDGE, DRAINAGE, LIGHTING, AND BORING LOG SHEETS FOR ADDITIONAL INFORMATION.
2. REFER TO APPROVED AESTHETICS PLAN FOR AESTHETIC TREATMENT, LAYOUT, AND SURFACE FINISHES FOR WALL PANELS, COPING, RAIL, AND RIPRAP.
3. REFER TO TXDOT STANDARD RW(MSE), RW(TRF), AND RW(MSE)DD FOR ADDITIONAL INFORMATION. EMBANKMENT EARTH REINFORCEMENTS SHALL HAVE A MINIMUM LENGTH EQUAL TO OR GREATER THAN THE REQUIREMENTS SHOWN IN RW(MSE)DD.
4. WALL MANUFACTURER MAY ADJUST AND SHALL ACCOMMODATE ANY INLETS POSITIONED WITHIN THE REINFORCING ZONE OF THE MSE WALL. ADJUSTMENTS SHALL BE SHOWN IN THE SHOP DRAWINGS.
5. PROVIDE POSITIVE DRAINAGE DURING CONSTRUCTION AND POST CONSTRUCTION PERIOD.
6. SQUARE FOOT SURFACE AREA OF RETAINING WALL IS MEASURED FROM TOP OF WALL TO BOTTOM OF WALL UNLESS NOTED OTHERWISE.
7. THE UTILITY INFORMATION SHOWN IS NOT GUARANTEED TO BE ACCURATE OR ALL INCLUSIVE. CONTRACTOR SHALL VERIFY THE LOCATIONS OF ALL UTILITIES PRIOR TO CONSTRUCTION. THE CONTRACTOR IS RESPONSIBLE FOR ALL DAMAGES TO UTILITIES CAUSED BY CONSTRUCTION OPERATIONS.
8. NO CONSTRUCTION SHALL BEGIN UNTIL ALL REFERENCED SHEETS ARE APPROVED FOR CONSTRUCTION.
9. BACKFILL SHALL BE TYPE DS.
10. CONTRACTOR SHALL INSTALL 2" WEEPHOLES WITH A 10′ MAXIMUM SACING. WEEPHOLES SHALL BE 3" MINIMUM ABOVE FINISHED GRADE.
11. WEEPHOLE COVERING SHALL BE ONE OF THE FOLLOWING MATERIAL TYPES:
    A. GALVANIZED STEEL WIRE CLOTH WITH 1/2" TO 1/4" MESH, MINIMUM WIRE DIAMETER OF 0.047".
    B. STAINLESS STEEL TYPE 304 OR 316 WITH 1/2" TO 1/4" MESH, MINIMUM WIRE DIAMETER OF 0.047".
    C. POLYETHYLENE OR POLYPROPYLENE GEONET WITH 0.15", MINIMUM THICKNESS, SUCH AS TENSAR DN-4 OR EQUAL.

RW105 ESTIMATED QUANTITES

ITEM	DESC	DESCRIPTION	QUANT.	UNITS
423	6001	RETAINING WALL (MSE)	2499	SF
432	6045	RIPRAP (MOW STRIP) (4IN)	9	CY
450	6014	RAIL (TY T551)	371	LF

NO.	REVISIONS	BY	DATE

PRELIMINARY
FOR REVIEW ONLY
THESE DOCUMENTS ARE PRELIMINARY AND SUBJECT TO CHANGE. THEY ARE NOT INTENDED FOR CONSTRUCTION OR BIDDING. THEY WERE PREPARED BY, OR UNDER THE SUPERVISION OF:
Engineer: JEFFREY E. WESANEN
P.E. No.: 117522
Date: 4/17/2017

ADVANCED STATUS

NOT FOR CONSTRUCTION

US 181 HARBOR BRIDGE

RETAINING WALL SECTION & DETAILS RW105 (PACKAGE 1.0.01)

SCALE: 1"=10′

FLATIRON/DRAGADOS LLC

Stantec
Engineered by Stantec Consulting Services Inc.
Texas Registered Engineering Firm F-6324

Texas Department of Transportation
© 2017

SHEET 1 OF 1

FED. RD. DIV. NO.	FEDERAL AID PROJECT NO.		SHEET NO.
6	HP X597(1)		RTWL 008
STATE	STATE DIST. NO.	COUNTY	
TEXAS	CRP	NUECES	
CONT.	SECT	JOB	HIGHWAY NO.
0101	06	095	US181

PROJECT: US 181 HARBOR BRIDGE

Checked by: Date:
Back-Checked by: Date:
Corrected by: Date:
Verified by: Date:

☐ Detail Check ☐ Internal Review ☐ Design Review ☐ TxDOT
☐ Drawing ☐ Report ☐ Other:
Prepared By: Date:
☐ Drawing Checked Against Calculations ☐ Calculations Check Confirmed
REVIEW PHASE

Plotted: 4/17/2017 5:40:49 PM
Pen Table: HBR_RTWL.tbl
Design File: pw:\\stantec-sc-pw.bentley.com:stantec-sc-pw\Documents\01 Projects\HBR\Build Work\Design\07-Walls\07.01-Sheets\HBR_RET_RW105_DT01.dgn

LEGEND

- PROPOSED TRAFFIC
- PROPOSED RETAINING WALL
- RWXXX-1 HORIZONTAL CURVE
- BORE LOCATION
- TEMPORARY SPL SHORING

RW103-1

P.I. STA 24+01.95
Δ = 4° 33′ 08.53" (RT)
T = 226.86
L = 453.49
R = 5707.58
P.C. STA 21+75.08
P.T. STA 26+28.57
TANGENT BRG @ PC = N 31° 34′ 24.67" E
TANGENT BRG @ PT = N 36° 07′ 33.19" E

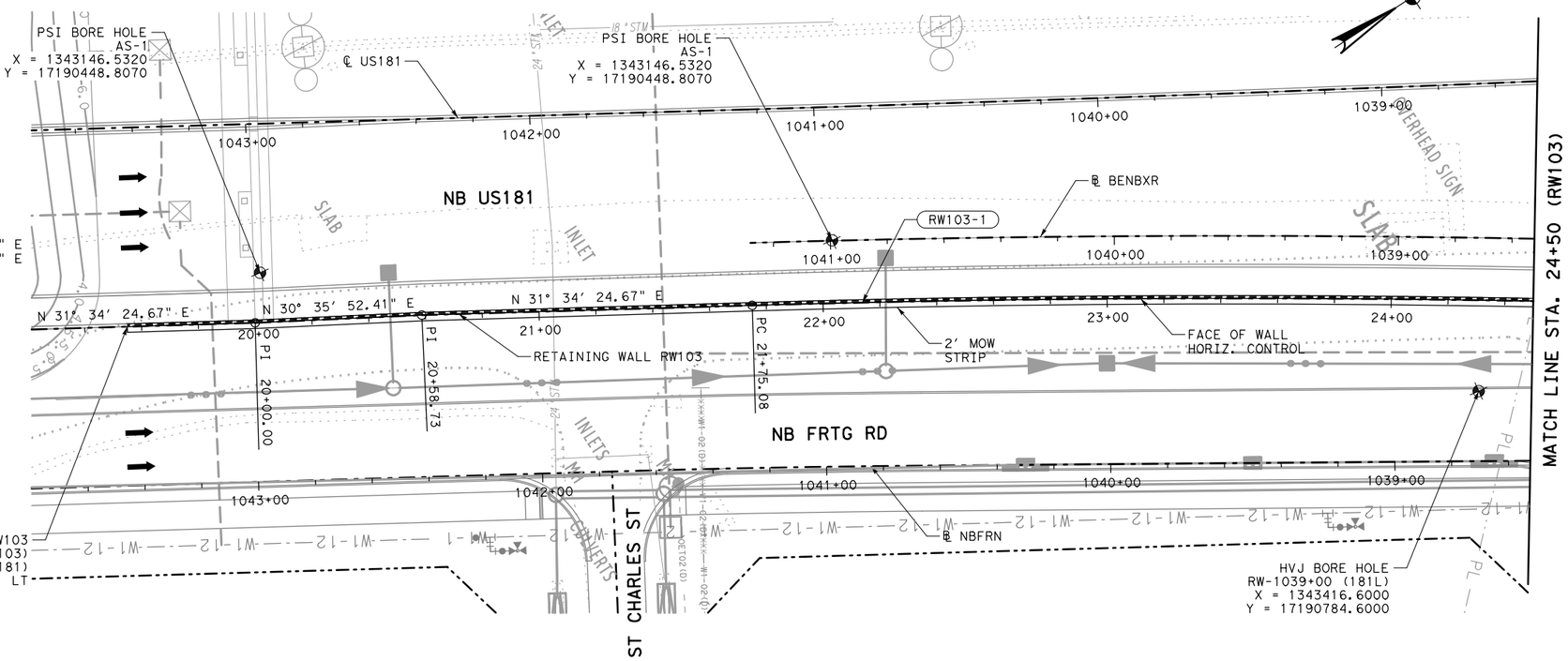

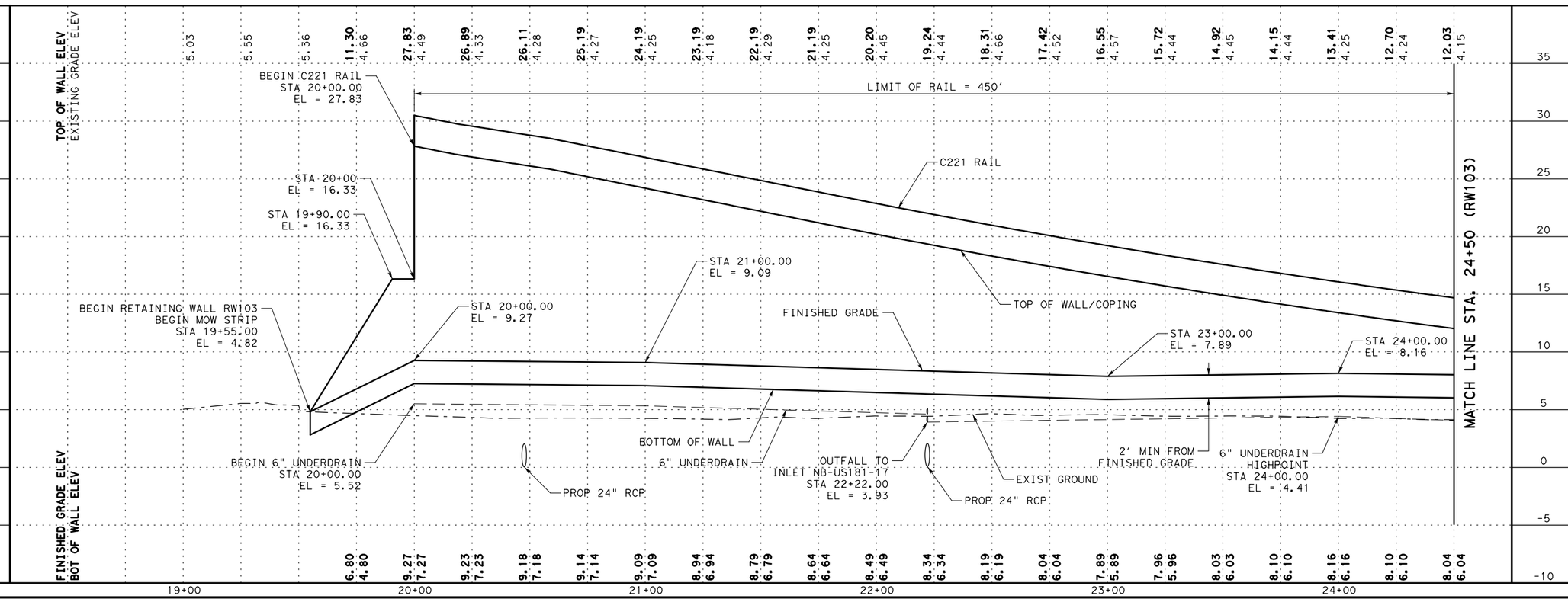

NO.	REVISIONS	BY	DATE

PRELIMINARY
FOR REVIEW ONLY
THESE DOCUMENTS ARE PRELIMINARY AND SUBJECT TO CHANGE. THEY ARE NOT INTENDED FOR CONSTRUCTION OR BIDDING. THEY WERE PREPARED BY, OR UNDER THE SUPERVISION OF:
Engineer: JEFFREY E. WESANEN
P.E. No.: 117522
Date: 4/17/2017

ADVANCED STATUS

NOT FOR CONSTRUCTION

US 181 HARBOR BRIDGE

RETAINING WALL LAYOUT RW103 (PACKAGE 1.0.02)

SCALE: 1"=50′ H
1"=10′ V

FLATIRON/DRAGADOS LLC

Stantec
Engineered by Stantec Consulting Services Inc.
Texas Registered Engineering Firm F-6324

Texas Department of Transportation
© 2017 SHEET 1 OF 2

FED. RD. DIV. NO.	FEDERAL AID PROJECT NO.		SHEET NO.
6	HP X597(1)		RTWL 001
STATE	STATE DIST. NO.	COUNTY	
TEXAS	CRP	NUECES	
CONT.	SECT	JOB	HIGHWAY NO.
0101	06	095	US181

PROJECT
US 181 HARBOR BRIDGE

Checked by: Date:
Back-Checked by: Date:
Corrected by: Date:
Verified by: Date:

☐ Detail Check ☐ Internal Review ☐ Design Review ☐ TxDOT
☐ Drawing ☐ Report ☐ Other:
Prepared By: Date:
☐ Drawing Checked Against Calculations ☐ Calculations Check Confirmed
REVIEW PHASE

Plotted: 4/17/2017 5:49:20 PM
Pen Table: HBR_RTWL.tbl
Design File: pw:\\stantec-sc-pw.bentley.com:stantec-sc-pw\Documents\01 Projects\HBR\Build Work\Design\07-Walls\07.01-Sheets\HBR_RET_RW103_PP01.dgn

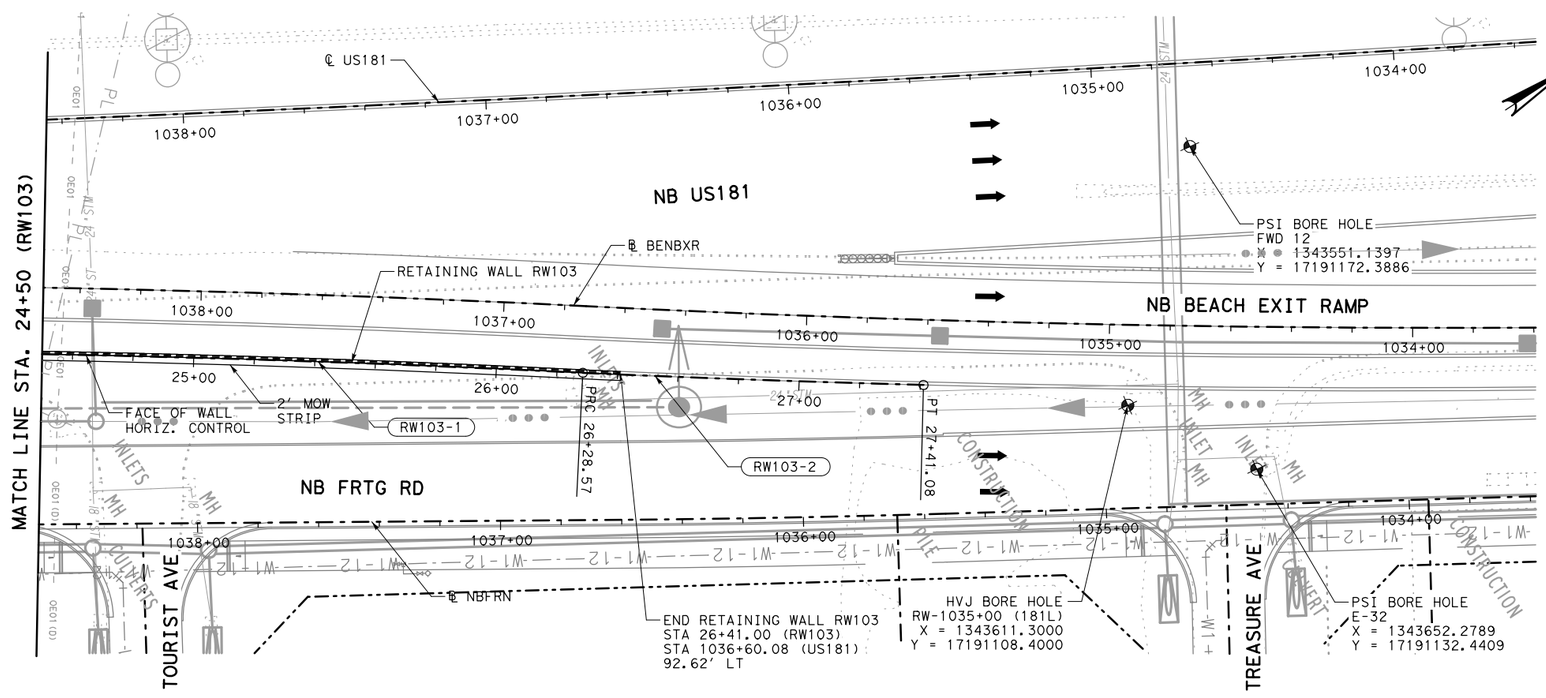

LEGEND

- PROPOSED TRAFFIC
- PROPOSED RETAINING WALL
- RWXXX-1 HORIZONTAL CURVE
- BORE LOCATION
- TEMPORARY SPL SHORING

RW103-1

P.I. STA 24+01.95
Δ = 4° 33′ 08.53" (RT)
T = 226.86
L = 453.49
R = 5707.58
P.C. STA 21+75.08
P.T. STA 26+28.57
TANGENT BRG @ PC = N 31° 34′ 24.67" E
TANGENT BRG @ PT = N 36° 07′ 33.19" E

RW103-2

P.I. STA 26+84.83
Δ = 1° 07′ 15.61" (LT)
T = 56.26
L = 112.51
R = 5750.52
P.C. STA 26+28.57
P.T. STA 27+41.08
TANGENT BRG @ PC = N 35° 52′ 12.07" E
TANGENT BRG @ PT = N 34° 44′ 56.46" E

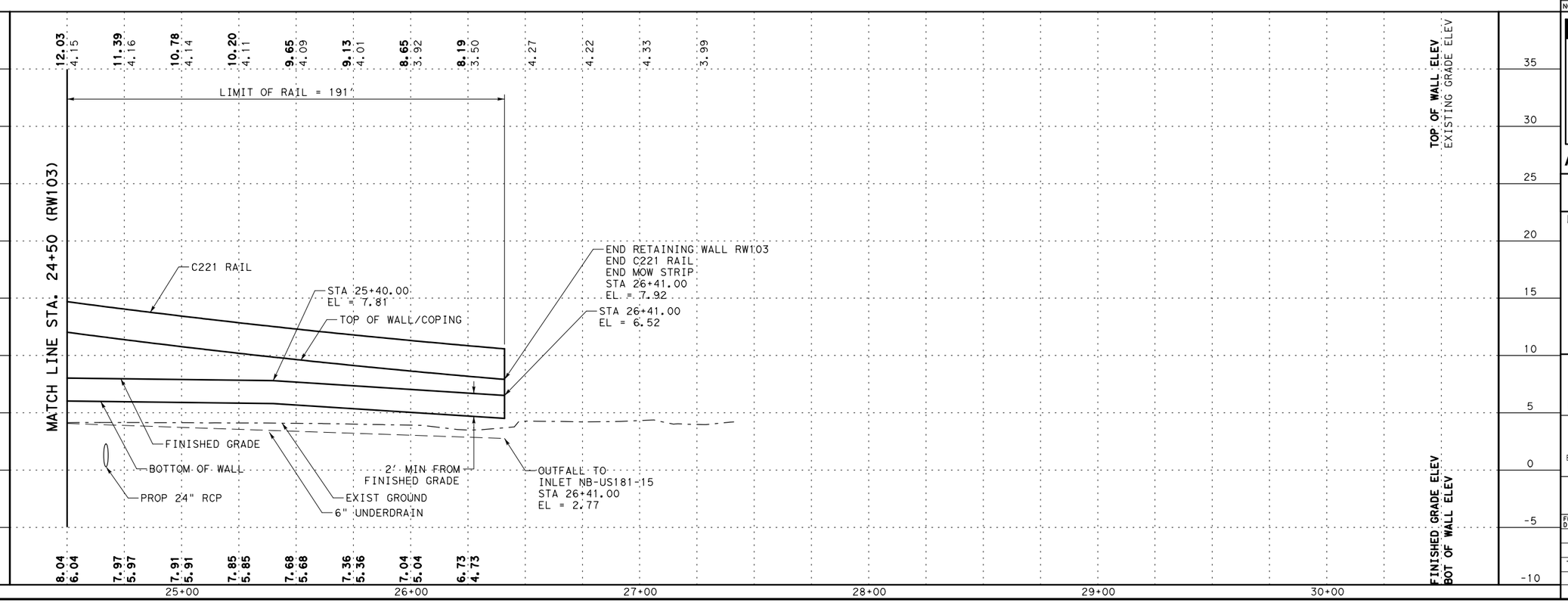

NO.	REVISIONS	BY	DATE

PRELIMINARY
FOR REVIEW ONLY
THESE DOCUMENTS ARE PRELIMINARY AND SUBJECT TO CHANGE. THEY ARE NOT INTENDED FOR CONSTRUCTION OR BIDDING. THEY WERE PREPARED BY, OR UNDER THE SUPERVISION OF:
Engineer: JEFFREY E. WESANEN
P.E. No.: 117522
Date: 4/17/2017

ADVANCED STATUS

NOT FOR CONSTRUCTION

US 181 HARBOR BRIDGE

RETAINING WALL LAYOUT RW103 (PACKAGE 1.0.02)

STA 24+50.00-STA 26+41.00
SCALE: 1"=50′ H
1"=10′ V

FLATIRON/DRAGADOS LLC

Stantec
Engineered by Stantec Consulting Services Inc.
Texas Registered Engineering Firm F-6324

Texas Department of Transportation
© 2017

SHEET 2 OF 2

FED. RD. DIV. NO.	FEDERAL AID PROJECT NO.		SHEET NO.
6	HP X597(1)		RTWL 002
STATE	STATE DIST. NO.	COUNTY	
TEXAS	CRP	NUECES	
CONT.	SECT	JOB	HIGHWAY NO.
0101	06	095	US181

PROJECT
US 181 HARBOR BRIDGE

Checked by: Date:
Back-Checked by: Date:
Corrected by: Date:
Verified by: Date:

REVIEW PHASE
☐ Detail Check ☐ Internal Review ☐ Design Review ☐ TxDOT
☐ Drawing ☐ Report ☐ Other:
Prepared By: Date:
☐ Drawing Checked Against Calculations ☐ Calculations Check Confirmed

Plotted: 4/17/2017 5:49:32 PM
Pen Table: HBR_RTWL.tbl
Design File: pw:\\stantec-sc-pw.bentley.com:stantec-sc-pw\Documents\01 Projects\HBR\Build Work\Design\07-Walls\07.01-Sheets\HBR_RET_RW103_PP02.dgn

NOTES:

1. SEE ROADWAY, BRIDGE, DRAINAGE, LIGHTING, AND BORING LOG SHEETS FOR ADDITIONAL INFORMATION.
2. REFER TO APPROVED AESTHETICS PLAN FOR AESTHETIC TREATMENT, LAYOUT, AND SURFACE FINISHES FOR WALL PANELS, COPING, RAIL, AND RIPRAP.
3. REFER TO TXDOT STANDARD RW(MSE), RW(TRF), AND RW(MSE)DD FOR ADDITIONAL INFORMATION. EMBANKMENT EARTH REINFORCEMENTS SHALL HAVE A MINIMUM LENGTH EQUAL TO OR GREATER THAN THE REQUIREMENTS SHOWN IN RW(MSE)DD.
4. WALL MANUFACTURER MAY ADJUST AND SHALL ACCOMMODATE ANY INLETS POSITIONED WITHIN THE REINFORCING ZONE OF THE MSE WALL. ADJUSTMENTS SHALL BE SHOWN IN THE SHOP DRAWINGS.
5. PROVIDE POSITIVE DRAINAGE DURING CONSTRUCTION AND POST CONSTRUCTION PERIOD.
6. SQUARE FOOT SURFACE AREA OF RETAINING WALL IS MEASURED FROM TOP OF WALL TO BOTTOM OF WALL UNLESS NOTED OTHERWISE.
7. THE UTILITY INFORMATION SHOWN IS NOT GUARANTEED TO BE ACCURATE OR ALL INCLUSIVE. CONTRACTOR SHALL VERIFY THE LOCATIONS OF ALL UTILITIES PRIOR TO CONSTRUCTION. THE CONTRACTOR IS RESPONSIBLE FOR ALL DAMAGES TO UTILITIES CAUSED BY CONSTRUCTION OPERATIONS.
8. NO CONSTRUCTION SHALL BEGIN UNTIL ALL REFERENCED SHEETS ARE APPROVED FOR CONSTRUCTION.

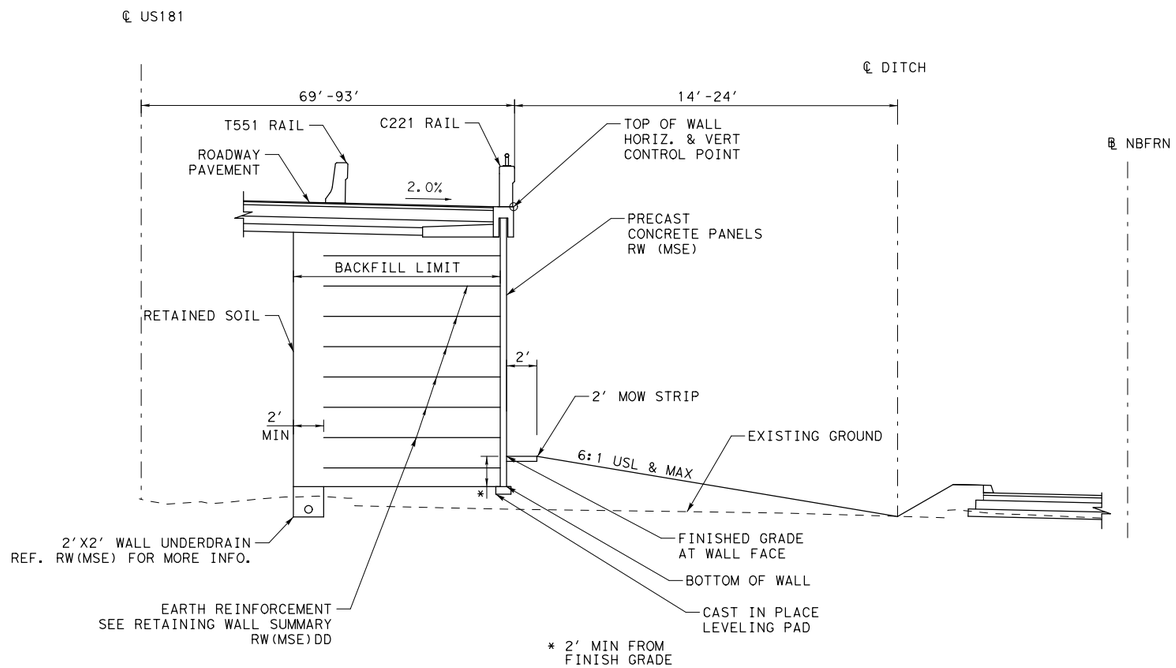

RW103 SECTION

STA 19+55.00 TO STA 26+41.00

RW103 ESTIMATED QUANTITES				
ITEM	DESC	DESCRIPTION	QUANT.	UNITS
423	6001	RETAINING WALL (MSE)	6987	SF
432	6045	RIPRAP (MOW STRIP) (4IN)	17	CY
450	6030	RAIL (TY C221)	641	LF

NO.	REVISIONS	BY	DATE

PRELIMINARY
FOR REVIEW ONLY
THESE DOCUMENTS ARE PRELIMINARY AND SUBJECT TO CHANGE. THEY ARE NOT INTENDED FOR CONSTRUCTION OR BIDDING. THEY WERE PREPARED BY, OR UNDER THE SUPERVISION OF:
Engineer: JEFFREY E. WESANEN
P.E. No.: 117522
Date: 4/17/2017

ADVANCED STATUS

NOT FOR CONSTRUCTION

US 181 HARBOR BRIDGE

RETAINING WALL SECTION & DETAILS RW103 (PACKAGE 1.0.02)

SCALE: 1"=10'

FLATIRON/DRAGADOS LLC

Stantec
Engineered by Stantec Consulting Services Inc.
Texas Registered Engineering Firm F-6324

Texas Department of Transportation
© 2017

SHEET 1 OF 1

FED. RD. DIV. NO.	FEDERAL AID PROJECT NO.		SHEET NO.
6	HP X597(1)		RTWL 003
STATE	STATE DIST. NO.	COUNTY	
TEXAS	CRP	NUECES	
CONT.	SECT	JOB	HIGHWAY NO.
0101	06	095	US181

PROJECT: US 181 HARBOR BRIDGE

Checked by: Date:
Back-Checked by: Date:
Corrected by: Date:
Verified by: Date:

REVIEW PHASE: ☐ Detail Check ☐ Internal Review ☐ Design Review ☐ TxDOT ☐ Drawing ☐ Report ☐ Other:

Prepared By: Date:

☐ Drawing Checked Against Calculations ☐ Calculations Check Confirmed

Plotted: 4/17/2017 5:49:54 PM
Pen Table: HBR_RTWL.tbl
Design File: pw:\\stantec-sc-pw.bentley.com:stantec-sc-pw\Documents\01 Projects\HBR\Build Work\Design\07-Walls\07.01-Sheets\HBR_RET_RW103_DT01.dgn

LEGEND

- PROPOSED TRAFFIC
- PROPOSED RETAINING WALL
- RWXXX-1 HORIZONTAL CURVE
- BORE LOCATION
- TEMPORARY SPL SHORING

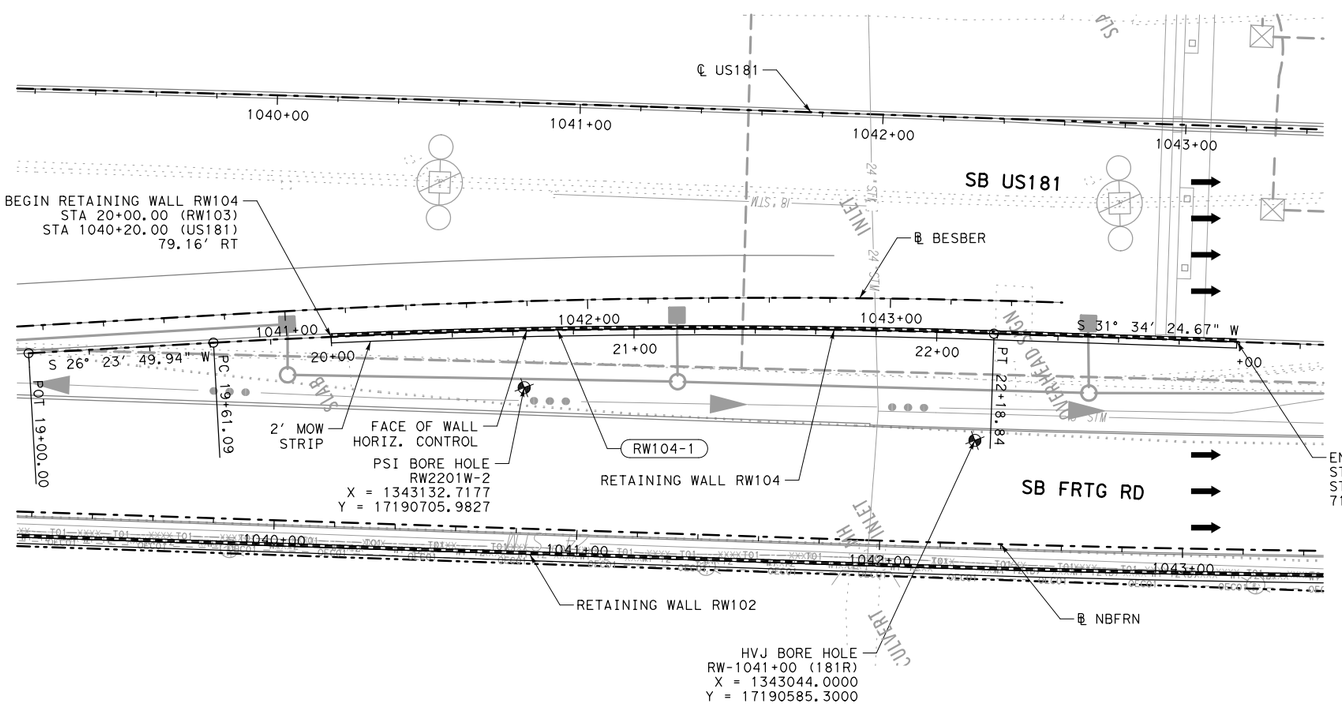

RW104-1

P.I. STA 20+90.05
Δ = 5° 10' 34.73" (RT)
T = 128.96
L = 257.75
R = 2853.00
P.C. STA 19+61.09
P.T. STA 22+18.84
TANGENT BRG @ PC = S 26° 23' 49.94" W
TANGENT BRG @ PT = S 31° 34' 24.67" W

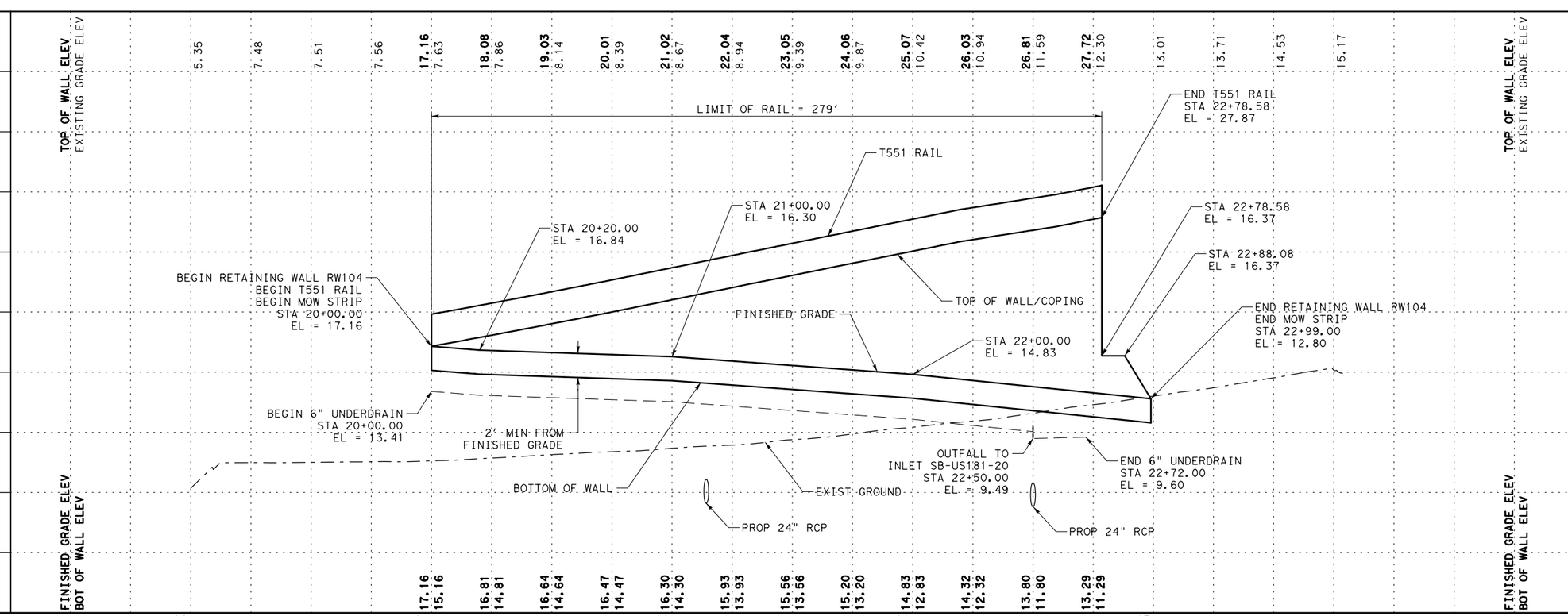

NO.	REVISIONS	BY	DATE

PRELIMINARY
FOR REVIEW ONLY
THESE DOCUMENTS ARE PRELIMINARY AND SUBJECT TO CHANGE. THEY ARE NOT INTENDED FOR CONSTRUCTION OR BIDDING. THEY WERE PREPARED BY, OR UNDER THE SUPERVISION OF:
Engineer: JEFFREY E. WESANEN
P.E. No.: 117522
Date: 4/17/2017

ADVANCED STATUS

NOT FOR CONSTRUCTION

US 181 HARBOR BRIDGE

RETAINING WALL LAYOUT RW104 (PACKAGE 1.0.02)

SCALE: 1"=50' H
1"=10' V

FLATIRON/DRAGADOS LLC

Stantec
Engineered by Stantec Consulting Services Inc.
Texas Registered Engineering Firm F-6324

Texas Department of Transportation
© 2017

FED. RD. DIV. NO.	FEDERAL AID PROJECT NO.		SHEET NO.
6	HP X597(1)		RTWL 004
STATE	STATE DIST. NO.	COUNTY	
TEXAS	CRP	NUECES	
CONT.	SECT	JOB	HIGHWAY NO.
0101	06	095	US181

SHEET 1 OF 1

PROJECT
US 181 HARBOR BRIDGE

Checked by: Date:
Back-Checked by: Date:
Corrected by: Date:
Verified by: Date:

☐ TxDOT
☐ Design Review
☐ Internal Review
☐ Detail Check
☐ Other:
☐ Report
☐ Drawing
Prepared By: Date:
☐ Calculations Check Confirmed
☐ Drawing Checked Against Calculations
REVIEW PHASE

Plotted: 4/17/2017 5:50:06 PM
Pen Table: HBR_RTWL.tbl
Design File: pw:\\stantec-sc-pw.bentley.com:stantec-sc-pw\Documents\01 Projects\HBR\Build Work\Design\07-Walls\07.01-Sheets\HBR_RET_RW104_PP01.dgn

NOTES:

1. SEE ROADWAY, BRIDGE, DRAINAGE, LIGHTING, AND BORING LOG SHEETS FOR ADDITIONAL INFORMATION.
2. REFER TO APPROVED AESTHETICS PLAN FOR AESTHETIC TREATMENT, LAYOUT, AND SURFACE FINISHES FOR WALL PANELS, COPING, RAIL, AND RIPRAP.
3. REFER TO TXDOT STANDARD RW(MSE), RW(TRF), AND RW(MSE)DD FOR ADDITIONAL INFORMATION. EMBANKMENT EARTH REINFORCEMENTS SHALL HAVE A MINIMUM LENGTH EQUAL TO OR GREATER THAN THE REQUIREMENTS SHOWN IN RW(MSE)DD.
4. WALL MANUFACTURER MAY ADJUST AND SHALL ACCOMMODATE ANY INLETS POSITIONED WITHIN THE REINFORCING ZONE OF THE MSE WALL. ADJUSTMENTS SHALL BE SHOWN IN THE SHOP DRAWINGS.
5. PROVIDE POSITIVE DRAINAGE DURING CONSTRUCTION AND POST CONSTRUCTION PERIOD.
6. SQUARE FOOT SURFACE AREA OF RETAINING WALL IS MEASURED FROM TOP OF WALL TO BOTTOM OF WALL UNLESS NOTED OTHERWISE.
7. THE UTILITY INFORMATION SHOWN IS NOT GUARANTEED TO BE ACCURATE OR ALL INCLUSIVE. CONTRACTOR SHALL VERIFY THE LOCATIONS OF ALL UTILITIES PRIOR TO CONSTRUCTION. THE CONTRACTOR IS RESPONSIBLE FOR ALL DAMAGES TO UTILITIES CAUSED BY CONSTRUCTION OPERATIONS.
8. NO CONSTRUCTION SHALL BEGIN UNTIL ALL REFERENCED SHEETS ARE APPROVED FOR CONSTRUCTION.

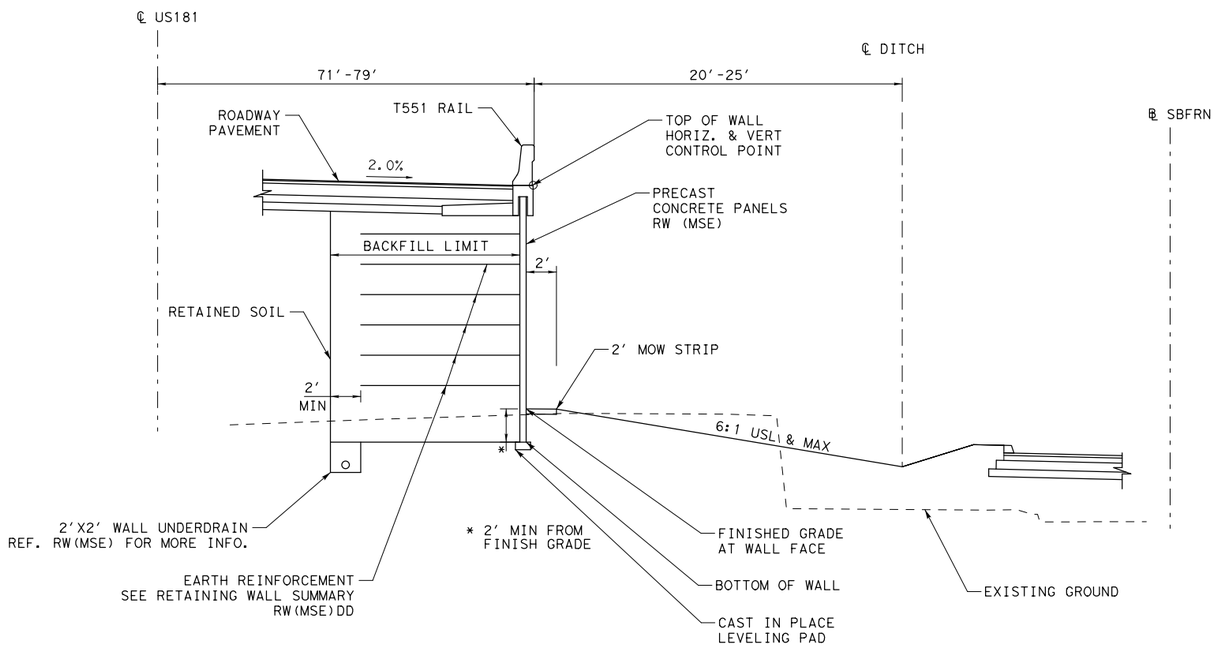

RW104 SECTION

STA 20+00.00 TO STA 22+99.00

RW104 ESTIMATED QUANTITES

ITEM	DESC	DESCRIPTION	QUANT.	UNITS
423	6001	RETAINING WALL (MSE)	2613	SF
432	6045	RIPRAP (MOW STRIP) (4IN)	7	CY
450	6014	RAIL (TY T551)	279	LF

NO.	REVISIONS	BY	DATE

PRELIMINARY
FOR REVIEW ONLY
THESE DOCUMENTS ARE PRELIMINARY AND SUBJECT TO CHANGE. THEY ARE NOT INTENDED FOR CONSTRUCTION OR BIDDING. THEY WERE PREPARED BY, OR UNDER THE SUPERVISION OF:
Engineer: JEFFREY E. WESANEN
P.E. No.: 117522
Date: 4/17/2017

ADVANCED STATUS

NOT FOR CONSTRUCTION

US 181 HARBOR BRIDGE

RETAINING WALL SECTION & DETAILS RW104 (PACKAGE 1.0.02)

SCALE: 1"=10'

FLATIRON/DRAGADOS LLC

Stantec
Engineered by Stantec Consulting Services Inc.
Texas Registered Engineering Firm F-6324

Texas Department of Transportation
© 2017
SHEET 1 OF 1

FED. RD. DIV. NO.	FEDERAL AID PROJECT NO.		SHEET NO.
6	HP X597(1)		RTWL 005
STATE	STATE DIST. NO.	COUNTY	
TEXAS	CRP	NUECES	
CONT.	SECT	JOB	HIGHWAY NO.
0101	06	095	US181

PROJECT: US 181 HARBOR BRIDGE

Checked by: Date: | Back-Checked by: Date: | Corrected by: Date: | Verified by: Date:

REVIEW PHASE: ☐ Detail Check ☐ Internal Review ☐ Design Review ☐ TxDOT ☐ Drawing ☐ Report ☐ Other: ____

Prepared By: ____ Date: ____

☐ Drawing Checked Against Calculations ☐ Calculations Check Confirmed

Plotted: 4/17/2017 5:50:18 PM
Pen Table: HBR_RTWL.tbl
Design File: pw:\\stantec-sc-pw.bentley.com:stantec-sc-pw\Documents\01 Projects\HBR\Build Work\Design\07-Walls\07.01-Sheets\HBR_RET_RW104_DT01.dgn

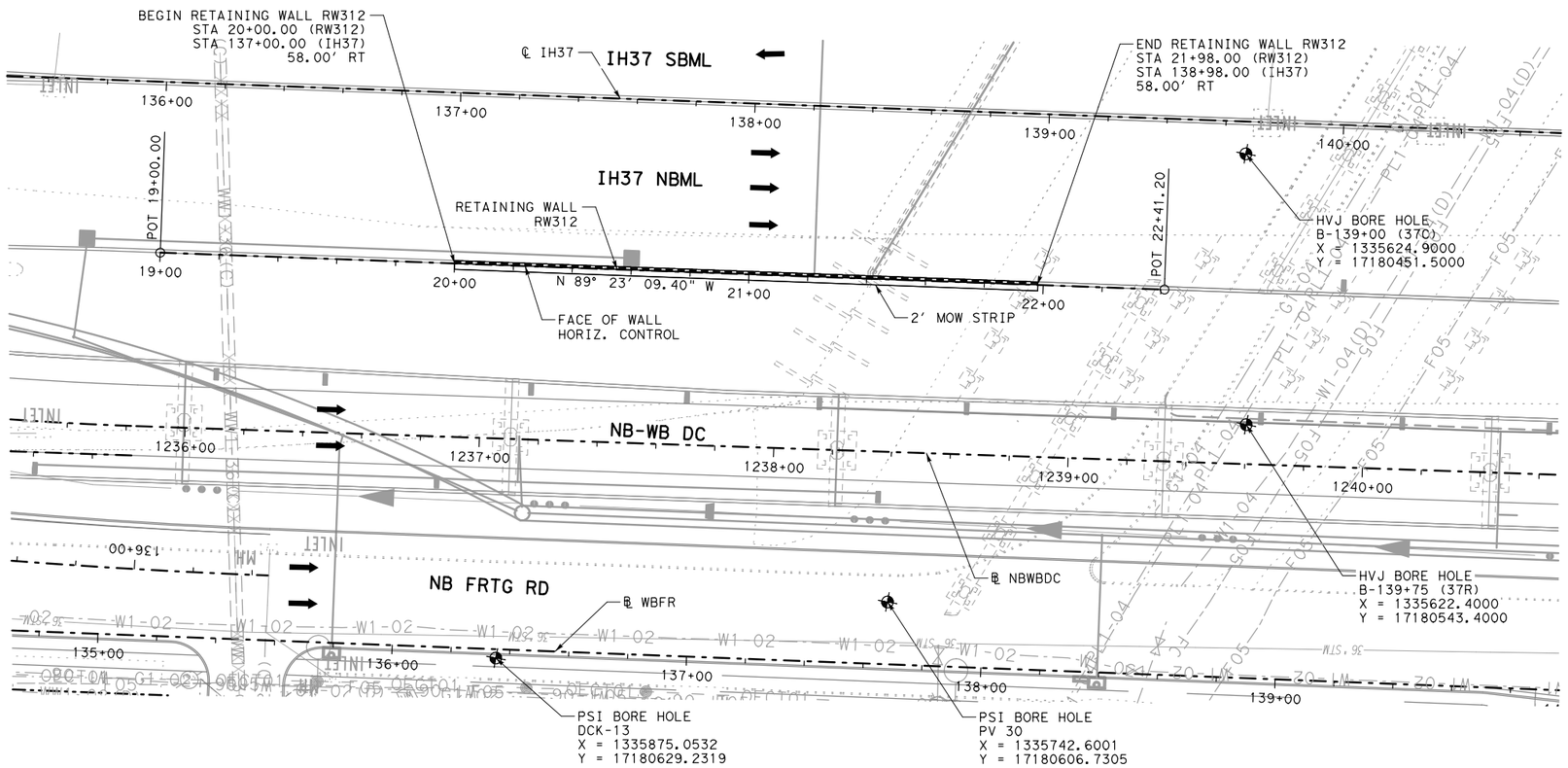

LEGEND

- PROPOSED TRAFFIC
- PROPOSED RETAINING WALL
- RWXXX-1 HORIZONTAL CURVE
- BORE LOCATION
- TEMPORARY SPL SHORING

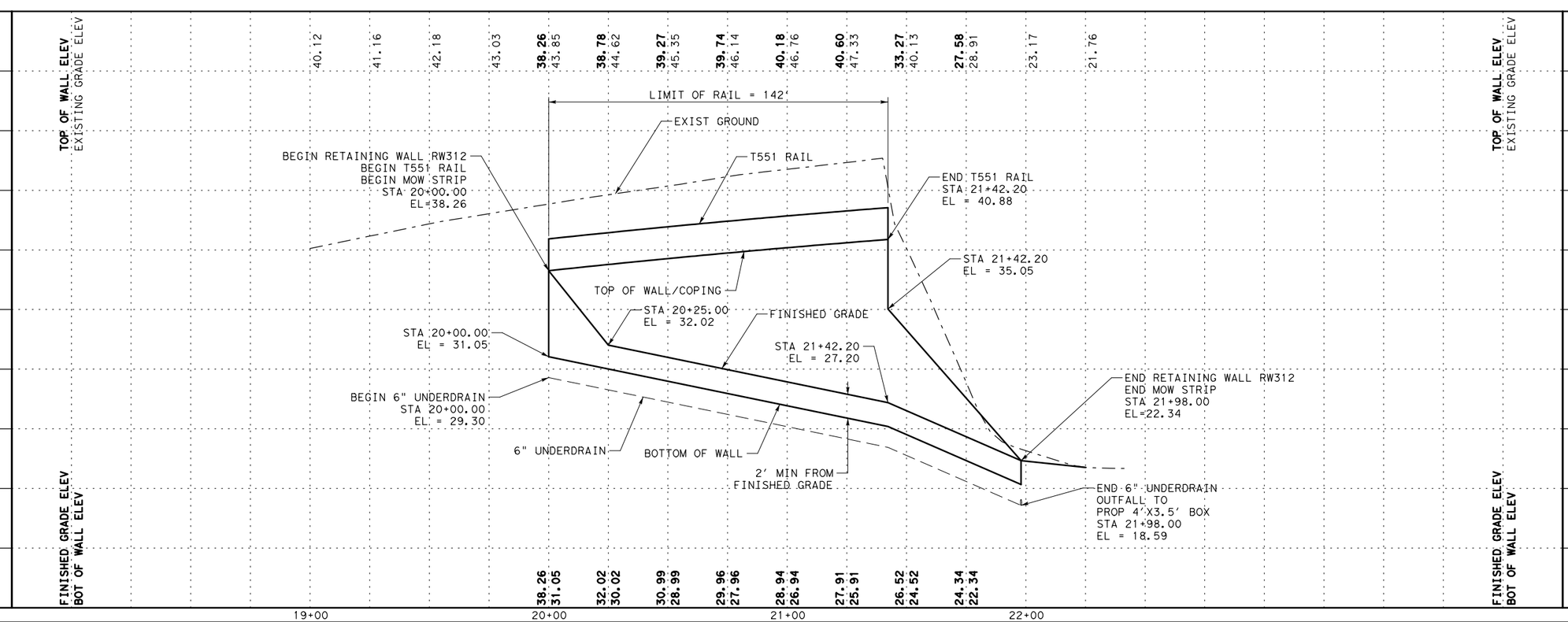

PROJECT
US 181 HARBOR BRIDGE

Checked by: Date:
Back-Checked by: Date:
Corrected by: Date:
Verified by: Date:

☐ Detail Check ☐ Internal Review ☐ Design Review ☐ TxDOT
☐ Drawing ☐ Report ☐ Other:
Prepared By: Date:
☐ Drawing Checked Against Calculations ☐ Calculations Check Confirmed
REVIEW PHASE

Plotted: 4/6/2017 8:59:17 AM
Pen Table: HBR_RTWL.tbl
Design File: pw:\\stantec-sc-pw.bentley.com:stantec-sc-pw\Documents\01 Projects\HBR\Build Work\Design\07-Walls\07.01-Sheets\HBR_RET_RW312_PP01.dgn

NO.	REVISIONS	BY	DATE

PRELIMINARY
FOR REVIEW ONLY
THESE DOCUMENTS ARE PRELIMINARY AND SUBJECT TO CHANGE. THEY ARE NOT INTENDED FOR CONSTRUCTION OR BIDDING. THEY WERE PREPARED BY, OR UNDER THE SUPERVISION OF:
Engineer: JEFFREY E. WESANEN
P.E. No.: 117522
Date: 4/6/2017

ADVANCED STATUS

NOT FOR CONSTRUCTION

US 181 HARBOR BRIDGE

RETAINING WALL LAYOUT RW312 (PACKAGE 3.0.01)

SCALE: 1"=50' H
1"=10' V

FLATIRON/DRAGADOS LLC

Stantec
Engineered by Stantec Consulting Services Inc.
Texas Registered Engineering Firm F-6324

Texas Department of Transportation
© 2017
SHEET 1 OF 1

FED. RD. DIV. NO.	FEDERAL AID PROJECT NO.		SHEET NO.
6	HP X597(1)		RTWL 001
STATE	STATE DIST. NO.	COUNTY	
TEXAS	CRP	NUECES	
CONT.	SECT	JOB	HIGHWAY NO.
0101	06	095	US181

RW312 ESTIMATED QUANTITES				
ITEM	DESC	DESCRIPTION	QUANT.	UNITS
423	6001	RETAINING WALL (MSE)	1968	SF
432	6045	RIPRAP (MOW STRIP) (4IN)	5	CY
450	6014	RAIL (TY T551)	142	LF

NOTES:

1. SEE ROADWAY, BRIDGE, DRAINAGE, LIGHTING, AND BORING LOG SHEETS FOR ADDITIONAL INFORMATION.
2. REFER TO APPROVED AESTHETICS PLAN FOR AESTHETIC TREATMENT, LAYOUT, AND SURFACE FINISHES FOR WALL PANELS, COPING, RAIL, AND RIPRAP.
3. REFER TO TXDOT STANDARD RW(MSE), RW(TRF), AND RW(MSE)DD FOR ADDITIONAL INFORMATION. EMBANKMENT EARTH REINFORCEMENTS SHALL HAVE A MINIMUM LENGTH EQUAL TO OR GREATER THAN THE REQUIREMENTS SHOWN IN RW(MSE)DD.
4. WALL MANUFACTURER MAY ADJUST AND SHALL ACCOMMODATE ANY INLETS POSITIONED WITHIN THE REINFORCING ZONE OF THE MSE WALL. ADJUSTMENTS SHALL BE SHOWN IN THE SHOP DRAWINGS.
5. PROVIDE POSITIVE DRAINAGE DURING CONSTRUCTION AND POST CONSTRUCTION PERIOD.
6. SQUARE FOOT SURFACE AREA OF RETAINING WALL IS MEASURED FROM TOP OF WALL TO BOTTOM OF WALL UNLESS NOTED OTHERWISE.
7. THE UTILITY INFORMATION SHOWN IS NOT GUARANTEED TO BE ACCURATE OR ALL INCLUSIVE. CONTRACTOR SHALL VERIFY THE LOCATIONS OF ALL UTILITIES PRIOR TO CONSTRUCTION. THE CONTRACTOR IS RESPONSIBLE FOR ALL DAMAGES TO UTILITIES CAUSED BY CONSTRUCTION OPERATIONS.
8. NO CONSTRUCTION SHALL BEGIN UNTIL ALL REFERENCED SHEETS ARE APPROVED FOR CONSTRUCTION.

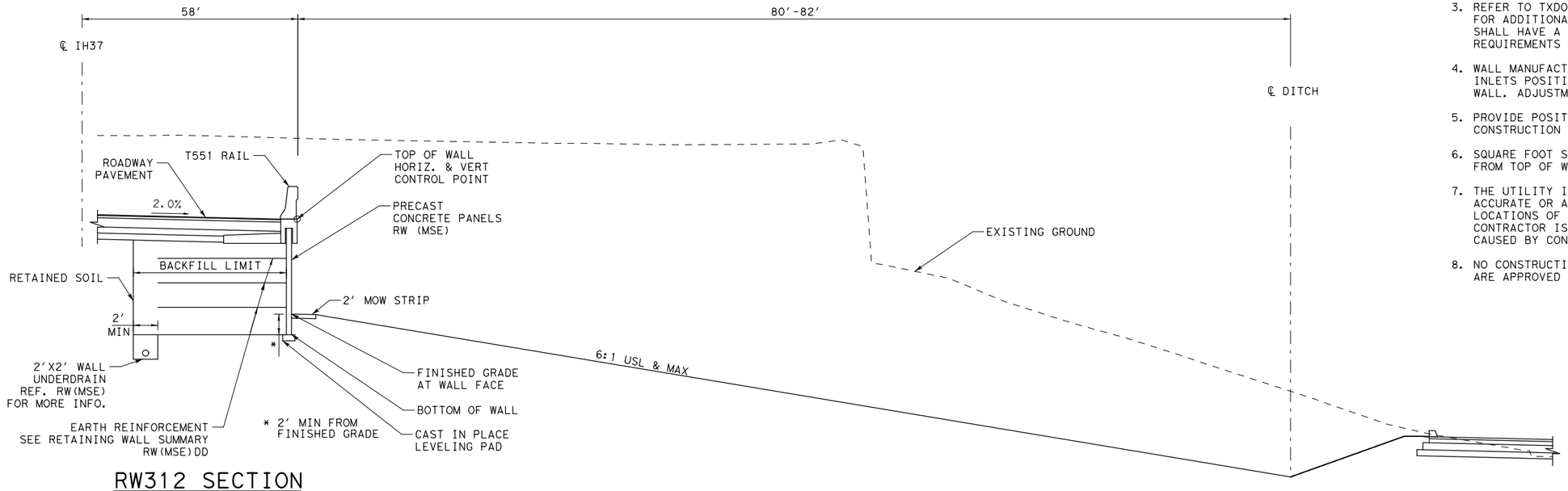

RW312 SECTION

STA 20+00.00 TO STA 21+42.20

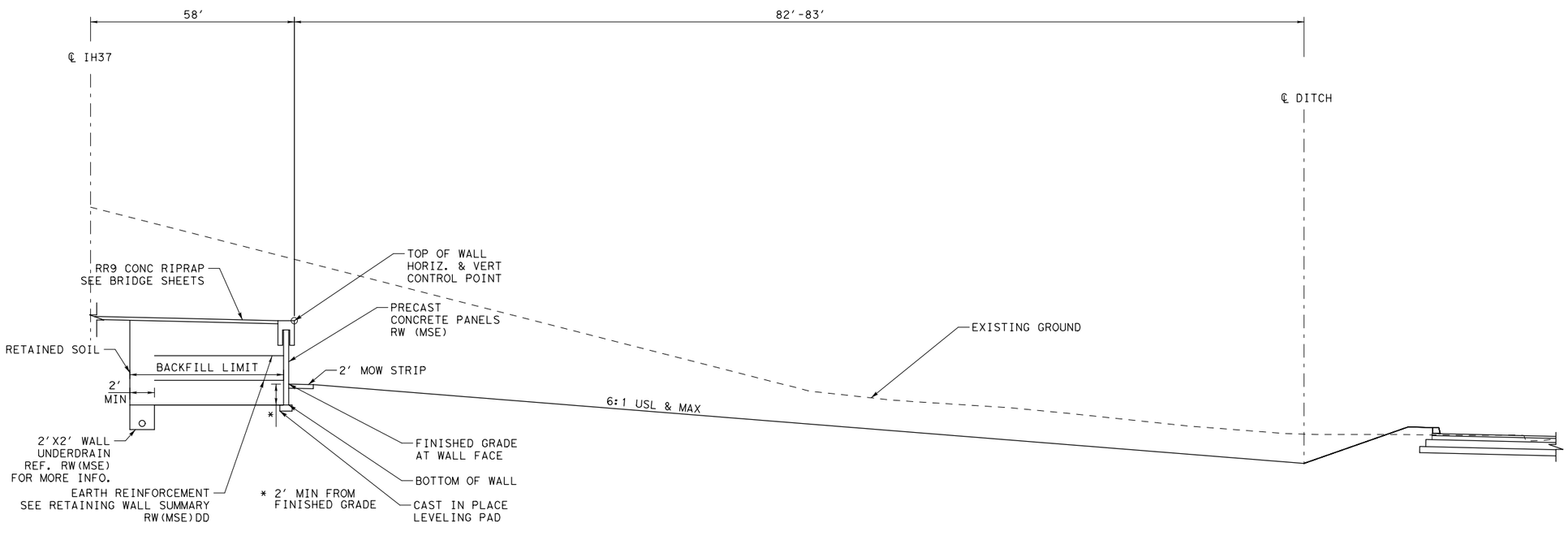

RW312 SECTION

STA 21+42.20 TO STA 21+98.00

NO.	REVISIONS	BY	DATE

PRELIMINARY
FOR REVIEW ONLY
THESE DOCUMENTS ARE PRELIMINARY AND SUBJECT TO CHANGE. THEY ARE NOT INTENDED FOR CONSTRUCTION OR BIDDING. THEY WERE PREPARED BY, OR UNDER THE SUPERVISION OF:
Engineer: JEFFREY E. WESANEN
P.E. No.: 117522
Date: 4/6/2017

ADVANCED STATUS

NOT FOR CONSTRUCTION

US 181 HARBOR BRIDGE

RETAINING WALL SECTION & DETAILS RW312 (PACKAGE 3.0.01)

SCALE: 1"=10'

FLATIRON/DRAGADOS LLC

Stantec
Engineered by Stantec Consulting Services Inc.
Texas Registered Engineering Firm F-6324

Texas Department of Transportation
© 2017

SHEET 1 OF 1

FED. RD. DIV. NO.	FEDERAL AID PROJECT NO.		SHEET NO.
6	HP X597(1)		RTWL 002
STATE	STATE DIST. NO.	COUNTY	
TEXAS	CRP	NUECES	
CONT.	SECT	JOB	HIGHWAY NO.
0101	06	095	US181

PROJECT: US 181 HARBOR BRIDGE

Checked by: Date:
Back-Checked by: Date:
Corrected by: Date:
Verified by: Date:

☐ Detail Check ☐ Internal Review ☐ Design Review ☐ TxDOT
☐ Drawing ☐ Report ☐ Other:
Prepared By: Date:
☐ Drawing Checked Against Calculations ☐ Calculations Check Confirmed
REVIEW PHASE

Plotted: 4/6/2017 8:59:22 AM
Pen Table: HBR_RTWL.tbl
Design File: pw:\\stantec-sc-pw.bentley.com:stantec-sc-pw\Documents\01 Projects\HBR\Build Work\Design\07-Walls\07.01-Sheets\HBR_RET_RW312_DT01.dgn

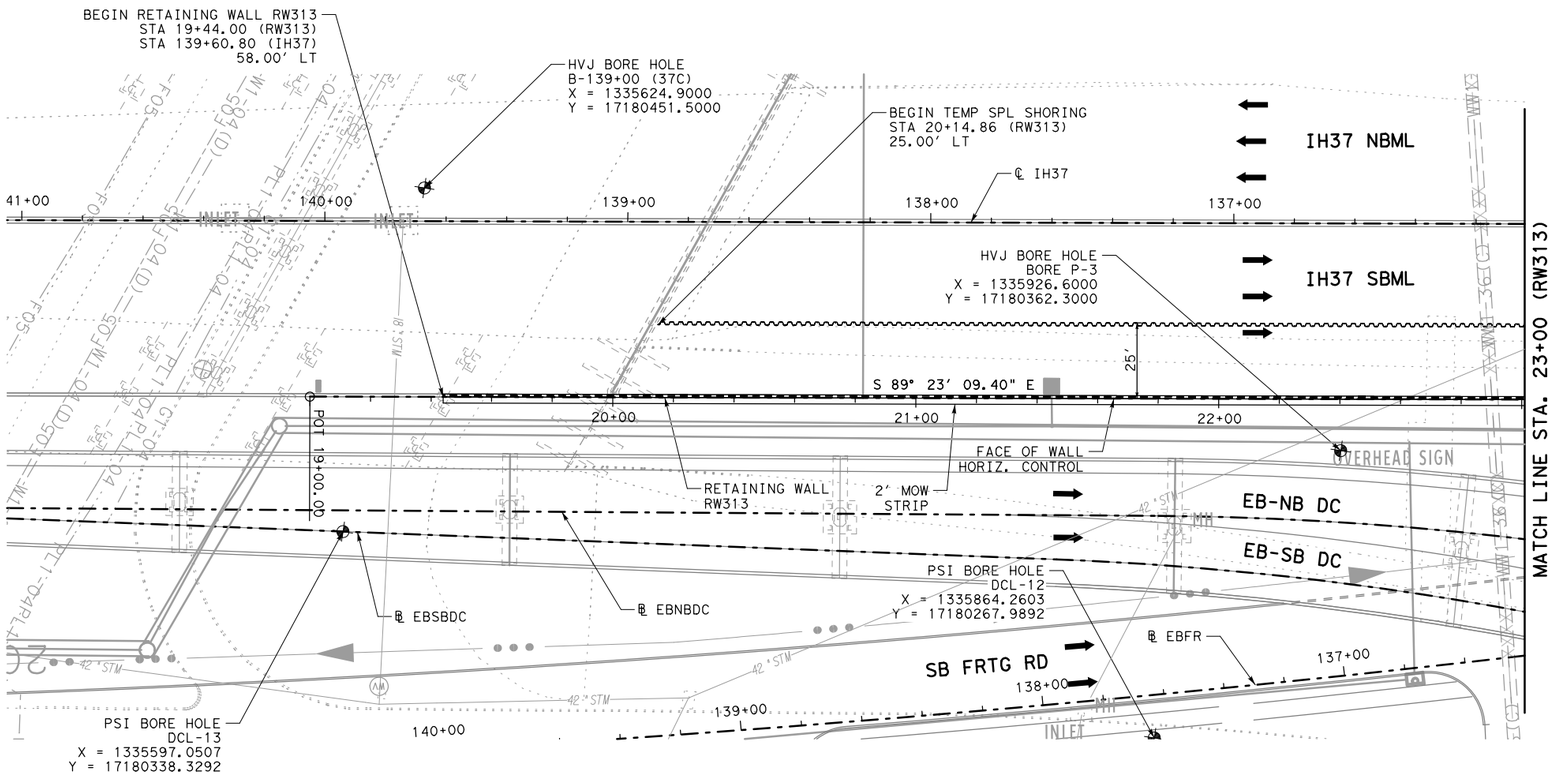

LEGEND

- PROPOSED TRAFFIC
- PROPOSED RETAINING WALL
- RWXXX-1 HORIZONTAL CURVE
- BORE LOCATION
- TEMPORARY SPL SHORING

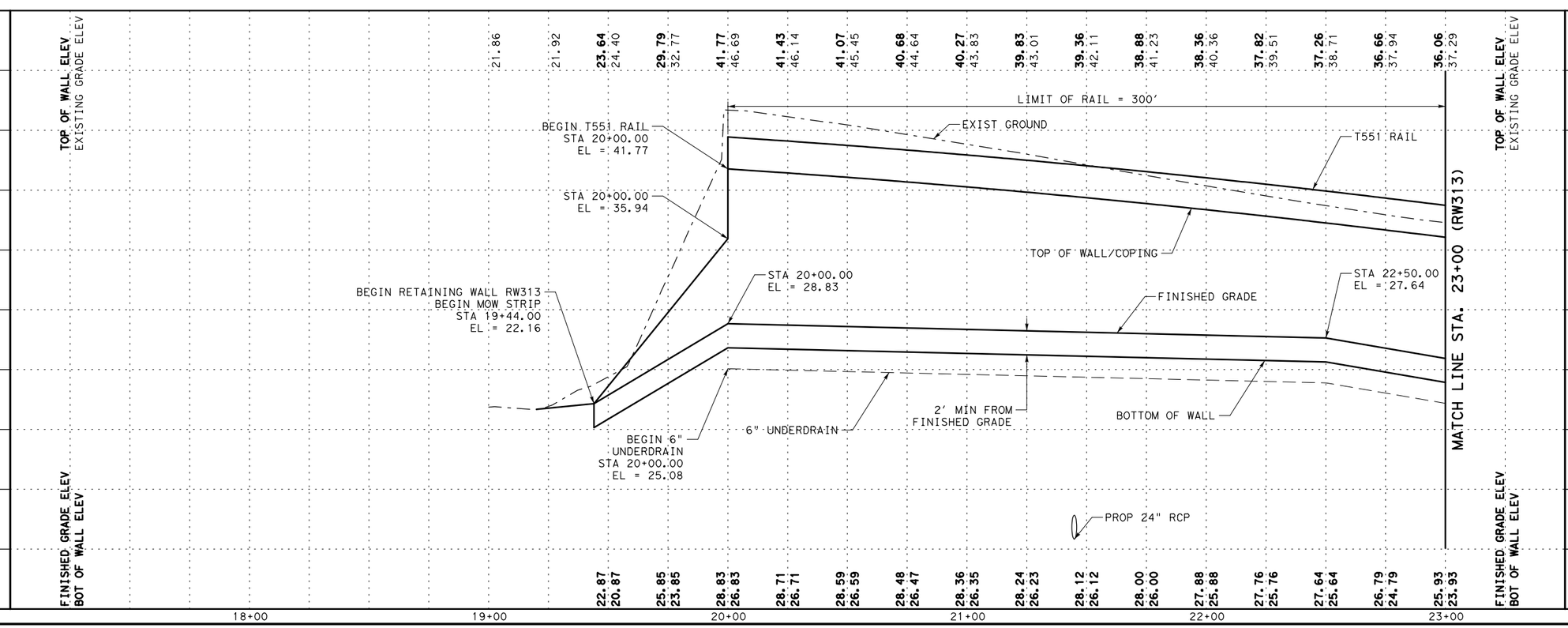

PROJECT
US 181 HARBOR BRIDGE

Checked by: Date:
Back-Checked by: Date:
Corrected by: Date:
Verified by: Date:

☐ TxDOT

☐ Detail Check ☐ Internal Review ☐ Design Review
☐ Drawing ☐ Report ☐ Other:

Prepared By: Date:

☐ Drawing Checked Against Calculations ☐ Calculations Check Confirmed

REVIEW PHASE

Plotted: 4/6/2017 8:59:29 AM
Pen Table: HBR_RTWL.tbl
Design File: pw:\\stantec-sc-pw.bentley.com:stantec-sc-pw\Documents\01 Projects\HBR\Build Work\Design\07-Walls\07.01-Sheets\HBR_RET_RW313_PP01

NO.	REVISIONS	BY	DATE

PRELIMINARY
FOR REVIEW ONLY
THESE DOCUMENTS ARE PRELIMINARY AND SUBJECT TO CHANGE. THEY ARE NOT INTENDED FOR CONSTRUCTION OR BIDDING. THEY WERE PREPARED BY, OR UNDER THE SUPERVISION OF:
Engineer: JEFFREY E. WESANEN
P.E. No.: 117522
Date: 4/6/2017

ADVANCED STATUS

NOT FOR CONSTRUCTION

US 181 HARBOR BRIDGE

RETAINING WALL LAYOUT RW313 (PACKAGE 3.0.01)

SCALE: 1"=50' H
1"=10' V

FLATIRON/DRAGADOS LLC

Stantec
Engineered by Stantec Consulting Services Inc.
Texas Registered Engineering Firm F-6324

Texas Department of Transportation
© 2017
SHEET 1 OF 3

FED. RD. DIV. NO.	FEDERAL AID PROJECT NO.		SHEET NO.
6	HP X597(1)		RTWL 003
STATE	STATE DIST. NO.	COUNTY	
TEXAS	CRP	NUECES	
CONT.	SECT	JOB	HIGHWAY NO.
0101	06	095	US181

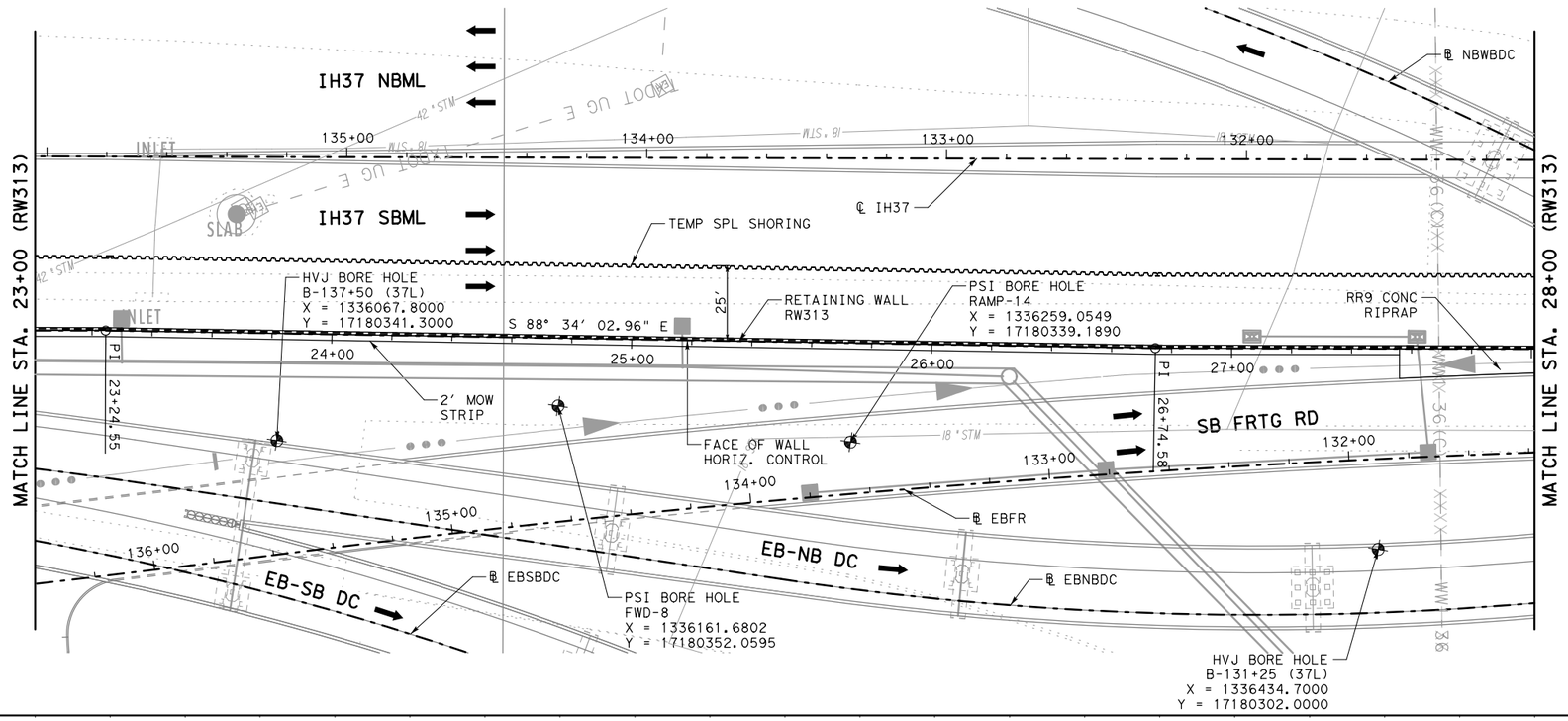

LEGEND

- PROPOSED TRAFFIC
- PROPOSED RETAINING WALL
- RWXXX-1 HORIZONTAL CURVE
- BORE LOCATION
- TEMPORARY SPL SHORING

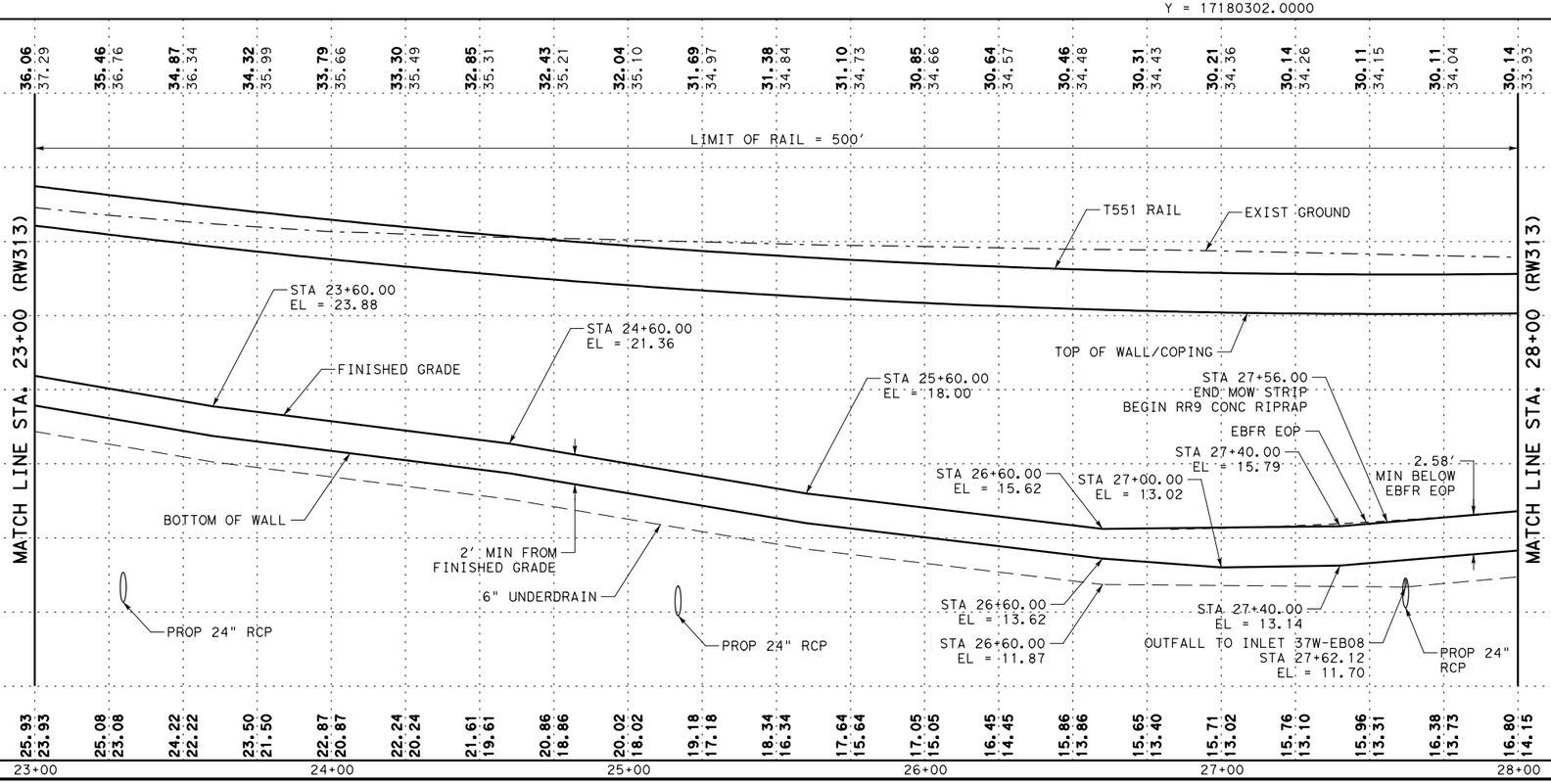

NO.	REVISIONS	BY	DATE

PRELIMINARY
FOR REVIEW ONLY
THESE DOCUMENTS ARE PRELIMINARY AND SUBJECT TO CHANGE. THEY ARE NOT INTENDED FOR CONSTRUCTION OR BIDDING. THEY WERE PREPARED BY, OR UNDER THE SUPERVISION OF:
Engineer: JEFFREY E. WESANEN
P.E. No.: 117522
Date: 4/6/2017

ADVANCED STATUS

NOT FOR CONSTRUCTION

US 181 HARBOR BRIDGE

RETAINING WALL LAYOUT RW313 (PACKAGE 3.0.01)

SCALE: 1"=50' H
1"=10' V

FLATIRON/DRAGADOS LLC

Stantec
Engineered by Stantec Consulting Services Inc.
Texas Registered Engineering Firm F-6324

Texas Department of Transportation
© 2017

SHEET 2 OF 3

FED. RD. DIV. NO.	FEDERAL AID PROJECT NO.	SHEET NO.
6	HP X597(1)	RTWL 004

STATE	STATE DIST. NO.	COUNTY
TEXAS	CRP	NUECES

CONT.	SECT	JOB	HIGHWAY NO.
0101	06	095	US181

PROJECT
US 181 HARBOR BRIDGE

Checked by: Date:
Back-Checked by: Date:
Corrected by: Date:
Verified by: Date:

REVIEW PHASE
☐ Detail Check ☐ Internal Review ☐ Design Review ☐ TxDOT
☐ Drawing ☐ Report ☐ Other: ____

Prepared By: Date:
☐ Drawing Checked Against Calculations ☐ Calculations Check Confirmed

Plotted: 4/6/2017 8:59:35 AM
Pen Table: HBR_RTWL.tbl
Design File: pw:\\stantec-sc-pw.bentley.com:stantec-sc-pw\Documents\01 Projects\HBR\Build Work\Design\07-Walls\07.01-Sheets\HBR_RET_RW313_PP02

LEGEND

- PROPOSED TRAFFIC
- PROPOSED RETAINING WALL
- RWXXX-1 HORIZONTAL CURVE
- BORE LOCATION
- TEMPORARY SPL SHORING

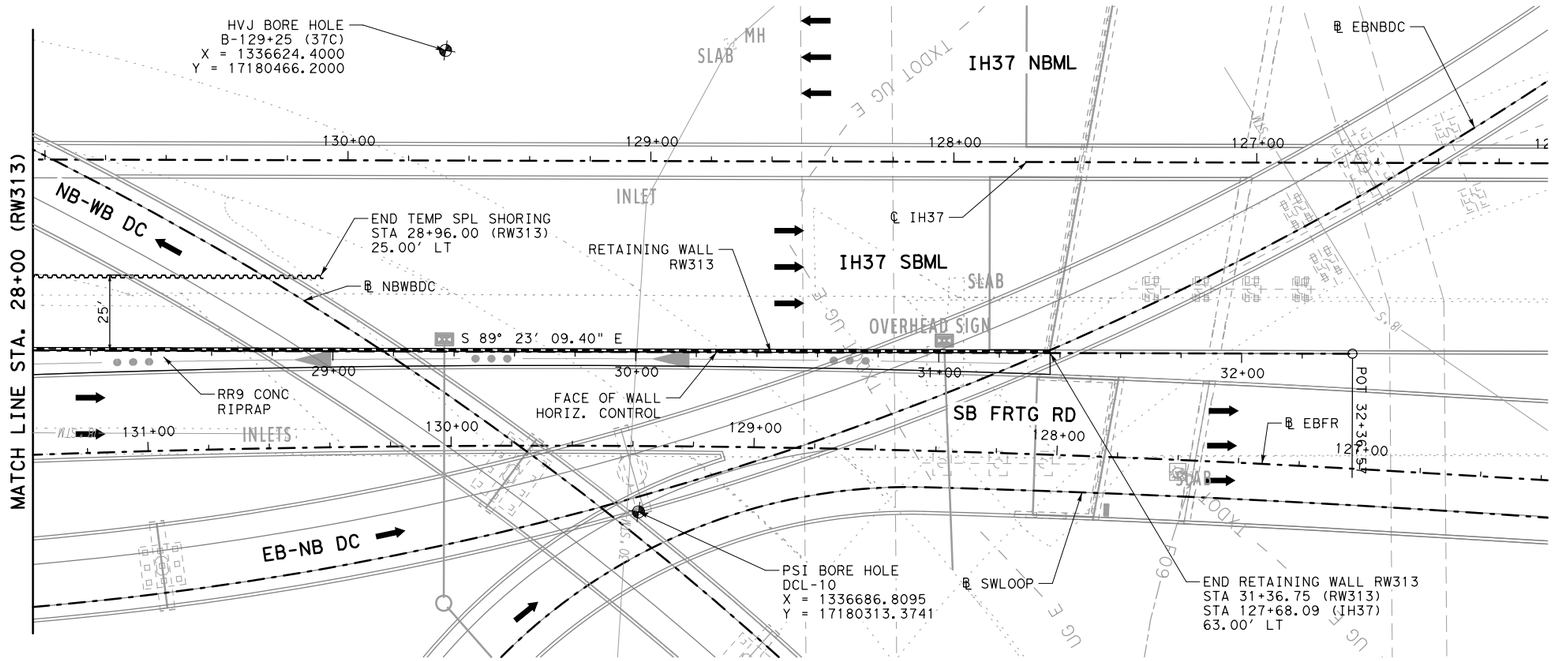

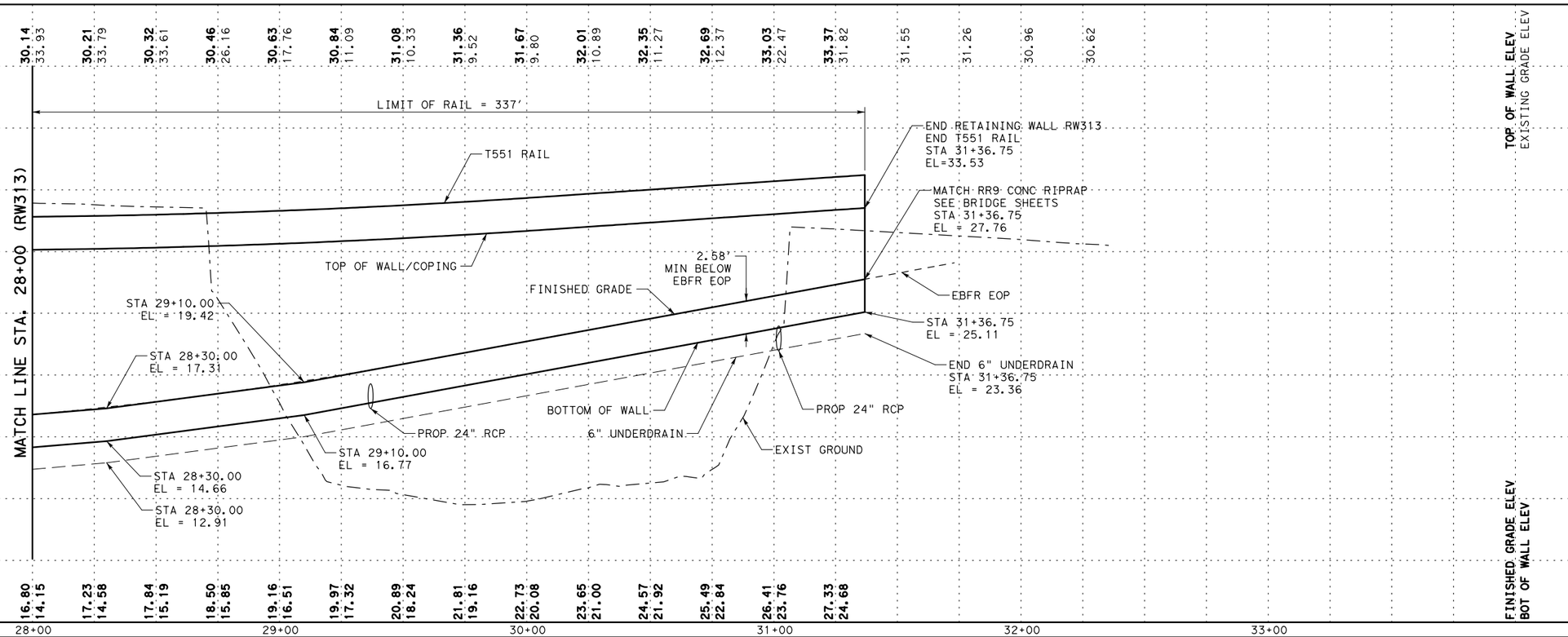

NO.	REVISIONS	BY	DATE

PRELIMINARY
FOR REVIEW ONLY
THESE DOCUMENTS ARE PRELIMINARY AND SUBJECT TO CHANGE. THEY ARE NOT INTENDED FOR CONSTRUCTION OR BIDDING. THEY WERE PREPARED BY, OR UNDER THE SUPERVISION OF:
Engineer: JEFFREY E. WESANEN
P.E. No.: 117522
Date: 4/6/2017

ADVANCED STATUS

NOT FOR CONSTRUCTION

US 181 HARBOR BRIDGE

RETAINING WALL LAYOUT RW313 (PACKAGE 3.0.01)

SCALE: 1"=50' H
1"=10' V

FLATIRON/DRAGADOS LLC

Stantec
Engineered by Stantec Consulting Services Inc.
Texas Registered Engineering Firm F-6324

Texas Department of Transportation
© 2017

SHEET 3 OF 3

FED. RD. DIV. NO.	FEDERAL AID PROJECT NO.		SHEET NO.
6	HP X597(1)		RTWL 005
STATE	STATE DIST. NO.	COUNTY	
TEXAS	CRP	NUECES	
CONT.	SECT	JOB	HIGHWAY NO.
0101	06	095	US181

PROJECT
US 181 HARBOR BRIDGE

Checked by: Date:
Back-Checked by: Date:
Corrected by: Date:
Verified by: Date:

☐ TxDOT
☐ Detail Check ☐ Internal Review ☐ Design Review
☐ Drawing ☐ Report ☐ Other:
Prepared By: Date:
☐ Drawing Checked Against Calculations ☐ Calculations Check Confirmed

REVIEW PHASE

Plotted: 4/6/2017 8:59:41 AM
Pen Table: HBR_RTWL.tbl
Design File: pw:\\stantec-sc-pw.bentley.com:stantec-sc-pw\Documents\01 Projects\HBR\Build Work\Design\07-Walls\07.01-Sheets\HBR_RET_RW313_PP03

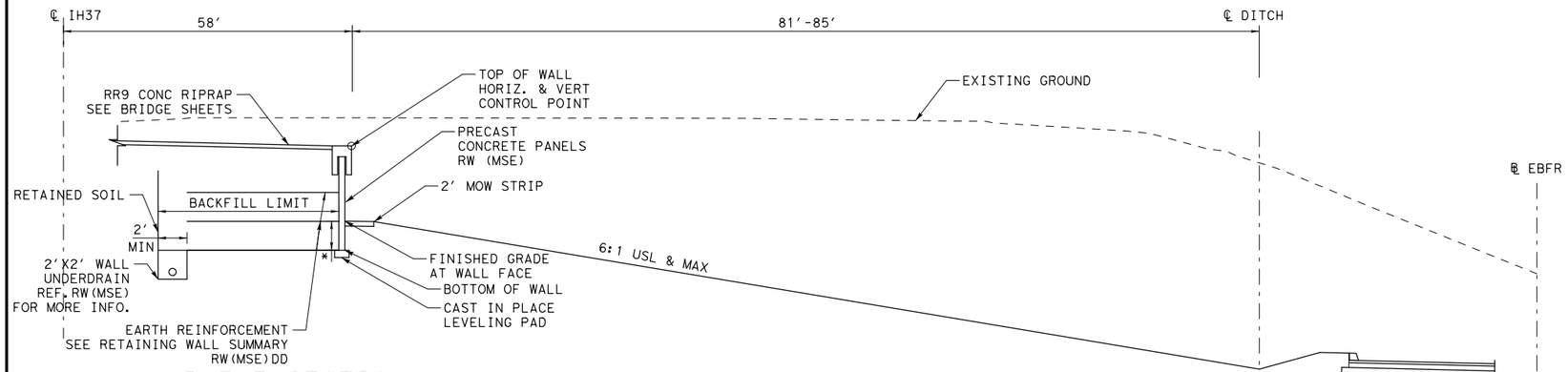

RW313 SECTION

STA 19+44.00 TO STA 20+00.00

* 2′ MIN FROM FINISHED GRADE

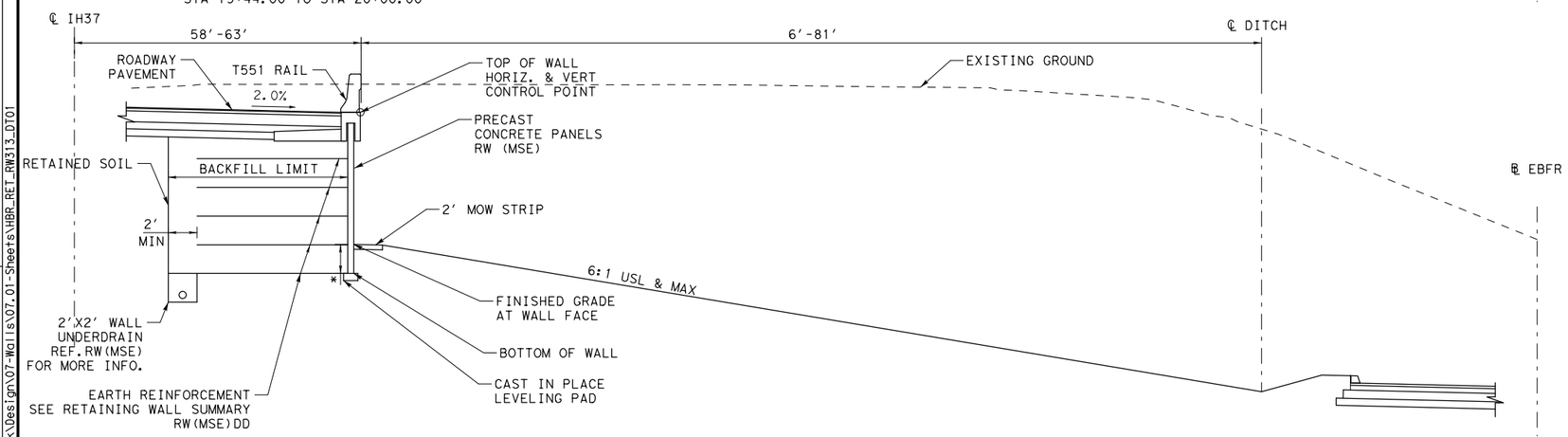

RW313 SECTION

STA 20+00.00 TO STA 27+56.00

* 2′ MIN FROM FINISHED GRADE

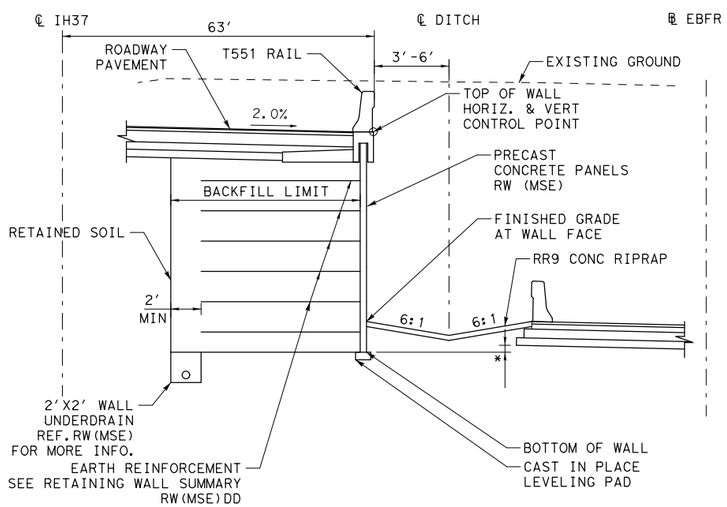

RW313 SECTION

STA 27+56.00 TO STA 28+95.00

* 1′ MIN FROM BOTTOM OF STABILIZED SUBGRADE

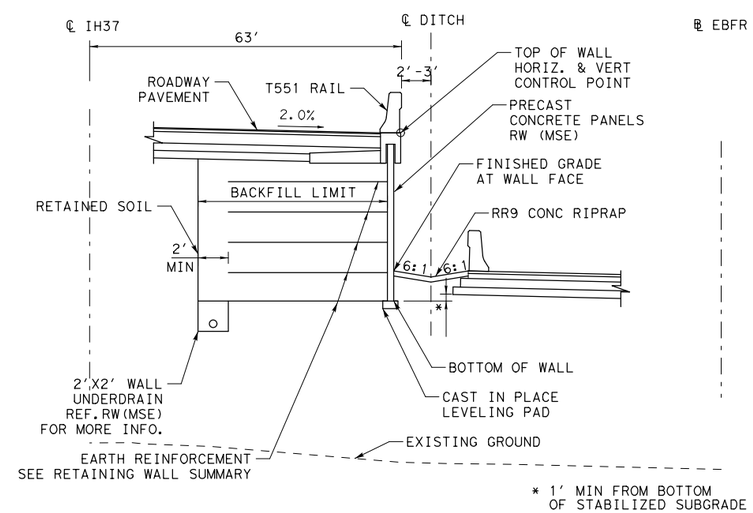

* 1′ MIN FROM BOTTOM OF STABILIZED SUBGRADE

RW313 SECTION

STA 28+95.00 TO STA 31+36.75

NOTES:

1. SEE ROADWAY, BRIDGE, DRAINAGE, LIGHTING, AND BORING LOG SHEETS FOR ADDITIONAL INFORMATION.
2. REFER TO APPROVED AESTHETICS PLAN FOR AESTHETIC TREATMENT, LAYOUT, AND SURFACE FINISHES FOR WALL PANELS, COPING, RAIL, AND RIPRAP.
3. REFER TO TXDOT STANDARD RW(MSE), RW(TRF), AND RW(MSE)DD FOR ADDITIONAL INFORMATION. EMBANKMENT EARTH REINFORCEMENTS SHALL HAVE A MINIMUM LENGTH EQUAL TO OR GREATER THAN THE REQUIREMENTS SHOWN IN RW(MSE)DD.
4. WALL MANUFACTURER MAY ADJUST AND SHALL ACCOMMODATE ANY INLETS POSITIONED WITHIN THE REINFORCING ZONE OF THE MSE WALL. ADJUSTMENTS SHALL BE SHOWN IN THE SHOP DRAWINGS.
5. PROVIDE POSITIVE DRAINAGE DURING CONSTRUCTION AND POST CONSTRUCTION PERIOD.
6. SQUARE FOOT SURFACE AREA OF RETAINING WALL IS MEASURED FROM TOP OF WALL TO BOTTOM OF WALL UNLESS NOTED OTHERWISE.
7. THE UTILITY INFORMATION SHOWN IS NOT GUARANTEED TO BE ACCURATE OR ALL INCLUSIVE. CONTRACTOR SHALL VERIFY THE LOCATIONS OF ALL UTILITIES PRIOR TO CONSTRUCTION. THE CONTRACTOR IS RESPONSIBLE FOR ALL DAMAGES TO UTILITIES CAUSED BY CONSTRUCTION OPERATIONS.
8. NO CONSTRUCTION SHALL BEGIN UNTIL ALL REFERENCED SHEETS ARE APPROVED FOR CONSTRUCTION.

RW313 ESTIMATED QUANTITES

ITEM	DESC	DESCRIPTION	QUANT.	UNITS
423	6001	RETAINING WALL (MSE)	15859	SF
432	6008	RIPRAP (CONC)(CL B)(RR8&RR9)	28	CY
432	6045	RIPRAP (MOW STRIP) (4IN)	20	CY
450	6014	RAIL (TY T551)	1137	LF

NO.	REVISIONS	BY	DATE

PRELIMINARY
FOR REVIEW ONLY
THESE DOCUMENTS ARE PRELIMINARY AND SUBJECT TO CHANGE. THEY ARE NOT INTENDED FOR CONSTRUCTION OR BIDDING. THEY WERE PREPARED BY, OR UNDER THE SUPERVISION OF:
Engineer: JEFFREY E. WESANEN
P.E. No.: 117522
Date: 4/6/2017

ADVANCED STATUS

NOT FOR CONSTRUCTION

US 181 HARBOR BRIDGE

RETAINING WALL SECTION & DETAILS RW313 (PACKAGE 3.0.01)

SCALE: 1"=10′

FLATIRON/DRAGADOS LLC

Stantec
Engineered by Stantec Consulting Services Inc.
Texas Registered Engineering Firm F-6324

Texas Department of Transportation
© 2017

SHEET 1 OF 1

FED. RD. DIV. NO.	FEDERAL AID PROJECT NO.		SHEET NO.
6	HP X597(1)		RTWL 006
STATE	STATE DIST. NO.	COUNTY	
TEXAS	CRP	NUECES	
CONT.	SECT	JOB	HIGHWAY NO.
0101	06	095	US181

PROJECT
US 181 HARBOR BRIDGE

Checked by: Date:
Back-Checked by: Date:
Corrected by: Date:
Verified by: Date:

☐ TxDOT
☐ Design Review
☐ Internal Review
☐ Detail Check
☐ Other:
☐ Report
☐ Drawing
Date:
Prepared By:
☐ Calculations Check Confirmed
☐ Drawing Checked Against Calculations

REVIEW PHASE

Plotted: 4/6/2017 8:59:47 AM
Pen Table: HBR_RTWL.tbl
Design File: pw:\\stantec-sc-pw.bentley.com:stantec-sc-pw\Documents\01 Projects\HBR\Build Work\Design\07-Walls\07.01-Sheets\HBR_RET_RW313_DT01

RW114-1

P.I. STA 20+79.63
Δ = 5° 18′ 06.19" (RT)
T = 179.63
L = 359.00
R = 3879.72
P.C. STA 19+00.00
P.T. STA 22+59.00
TANGENT BRG @ PC = N 1° 25′ 15.85" E
TANGENT BRG @ PT = N 6° 43′ 22.05" E

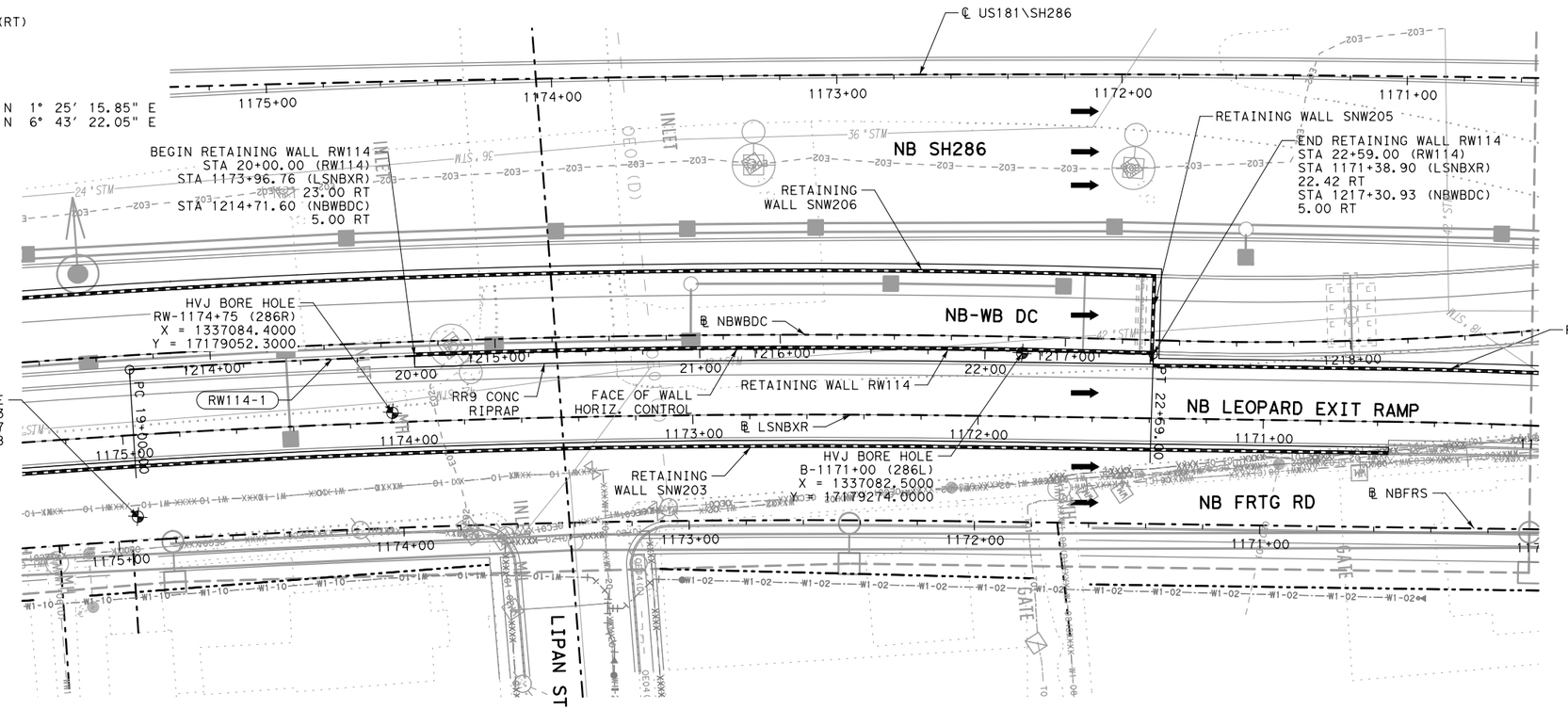

LEGEND

- PROPOSED TRAFFIC
- PROPOSED RETAINING WALL
- RWXXX-1 HORIZONTAL CURVE
- BORE LOCATION
- TEMPORARY SPL SHORING

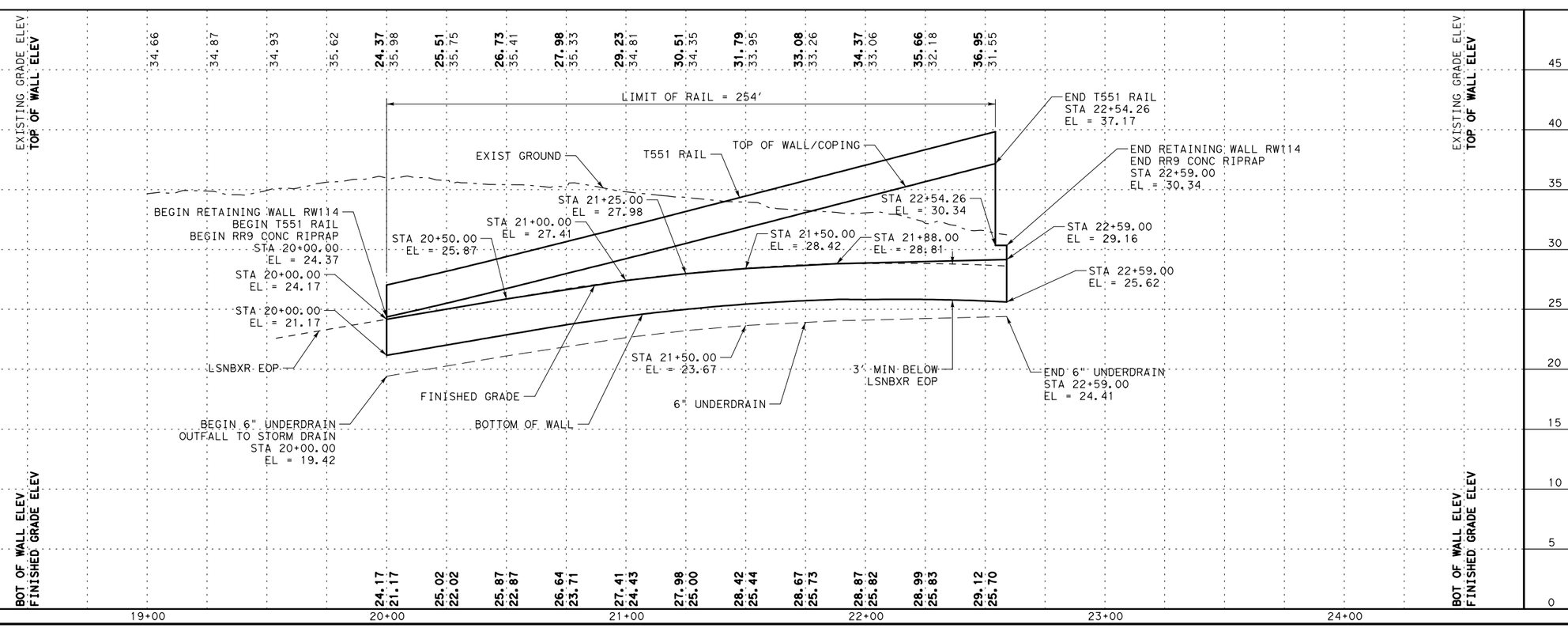

NO.	REVISIONS	BY	DATE

PRELIMINARY
FOR REVIEW ONLY
THESE DOCUMENTS ARE PRELIMINARY AND SUBJECT TO CHANGE. THEY ARE NOT INTENDED FOR CONSTRUCTION OR BIDDING. THEY WERE PREPARED BY, OR UNDER THE SUPERVISION OF:
Engineer: JEFFREY E. WESANEN
P.E. No.: 117522
Date: 4/17/2017

ADVANCED STATUS

NOT FOR CONSTRUCTION

US 181 HARBOR BRIDGE

RETAINING WALL LAYOUT RW114 (PACKAGE 5.0.01)

SCALE: 1"=50′ H
1"=10′ V

FLATIRON/DRAGADOS LLC

Stantec
Engineered by Stantec Consulting Services Inc.
Texas Registered Engineering Firm F-6324

Texas Department of Transportation
© 2017

SHEET 1 OF 1

FED. RD. DIV. NO.	FEDERAL AID PROJECT NO.		SHEET NO.
6	HP X597(1)		RTWL 001
STATE	STATE DIST. NO.	COUNTY	
TEXAS	CRP	NUECES	
CONT.	SECT	JOB	HIGHWAY NO.
0101	06	095	US181

PROJECT
US 181 HARBOR BRIDGE

Checked by: Date:
Back-Checked by: Date:
Corrected by: Date:
Verified by: Date:

☐ Detail Check ☐ Internal Review ☐ Design Review ☐ TxDOT
☐ Drawing ☐ Report ☐ Other:
Prepared By: Date:
☐ Drawing Checked Against Calculations ☐ Calculations Check Confirmed
REVIEW PHASE

Plotted: 4/17/2017 6:17:55 PM
Pen Table: HBR_RTWL.tbl
Design File: pw:\\stantec-sc-pw.bentley.com:stantec-sc-pw\Documents\01 Projects\HBR\Build Work\Design\07-Walls\07.01-Sheets\HBR_RET_RW114_PP01.dgn

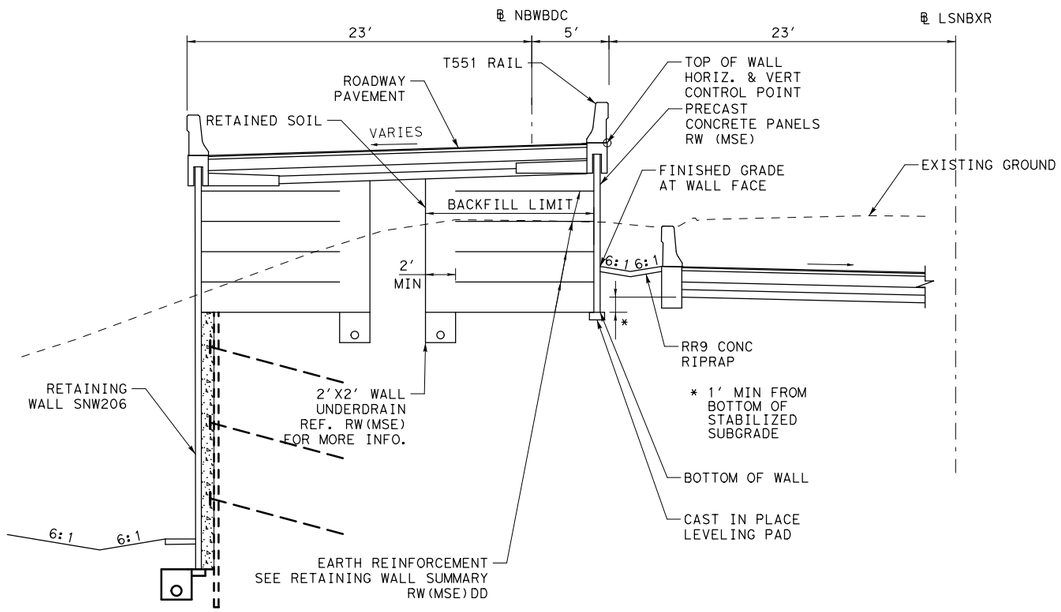

RW114 SECTION

STA 20+00.00 TO STA 22+59.00

NOTES:

1. SEE ROADWAY, BRIDGE, DRAINAGE, LIGHTING, AND BORING LOG SHEETS FOR ADDITIONAL INFORMATION.
2. REFER TO APPROVED AESTHETICS PLAN FOR AESTHETIC TREATMENT, LAYOUT, AND SURFACE FINISHES FOR WALL PANELS, COPING, RAIL, AND RIPRAP.
3. REFER TO TXDOT STANDARD RW(MSE), RW(TRF), AND RW(MSE)DD FOR ADDITIONAL INFORMATION. EMBANKMENT EARTH REINFORCEMENTS SHALL HAVE A MINIMUM LENGTH EQUAL TO OR GREATER THAN THE REQUIREMENTS SHOWN IN RW(MSE)DD.
4. WALL MANUFACTURER MAY ADJUST AND SHALL ACCOMMODATE ANY INLETS POSITIONED WITHIN THE REINFORCING ZONE OF THE MSE WALL. ADJUSTMENTS SHALL BE SHOWN IN THE SHOP DRAWINGS.
5. PROVIDE POSITIVE DRAINAGE DURING CONSTRUCTION AND POST CONSTRUCTION PERIOD.
6. SQUARE FOOT SURFACE AREA OF RETAINING WALL IS MEASURED FROM TOP OF WALL TO BOTTOM OF WALL UNLESS NOTED OTHERWISE.
7. THE UTILITY INFORMATION SHOWN IS NOT GUARANTEED TO BE ACCURATE OR ALL INCLUSIVE. CONTRACTOR SHALL VERIFY THE LOCATIONS OF ALL UTILITIES PRIOR TO CONSTRUCTION. THE CONTRACTOR IS RESPONSIBLE FOR ALL DAMAGES TO UTILITIES CAUSED BY CONSTRUCTION OPERATIONS.
8. NO CONSTRUCTION SHALL BEGIN UNTIL ALL REFERENCED SHEETS ARE APPROVED FOR CONSTRUCTION.

RW114 ESTIMATED QUANTITES

ITEM	DESC	DESCRIPTION	QUANT.	UNITS
423	6001	RETAINING WALL (MSE)	1599	SF
432	6008	RIPRAP (CONC)(CL B)(RR8&RR9)	13	CY
450	6014	RAIL (TY T551)	254	LF

NO.	REVISIONS	BY	DATE

PRELIMINARY
FOR REVIEW ONLY
THESE DOCUMENTS ARE PRELIMINARY AND SUBJECT TO CHANGE. THEY ARE NOT INTENDED FOR CONSTRUCTION OR BIDDING. THEY WERE PREPARED BY, OR UNDER THE SUPERVISION OF:
Engineer: JEFFREY E. WESANEN
P.E. No.: 117522
Date: 4/17/2017

ADVANCED STATUS

NOT FOR CONSTRUCTION

US 181 HARBOR BRIDGE

RETAINING WALL SECTION & DETAILS RW114 (PACKAGE 5.0.01)

SCALE: 1"=10′

FLATIRON/DRAGADOS LLC

Stantec
Engineered by Stantec Consulting Services Inc.
Texas Registered Engineering Firm F-6324

Texas Department of Transportation
© 2017
SHEET 1 OF 1

FED. RD. DIV. NO.	FEDERAL AID PROJECT NO.		SHEET NO.
6	HP X597(1)		RTWL 002
STATE	STATE DIST. NO.	COUNTY	
TEXAS	CRP	NUECES	
CONT.	SECT	JOB	HIGHWAY NO.
0101	06	095	US181

PROJECT: US 181 HARBOR BRIDGE

Checked by: Date:
Back-Checked by: Date:
Corrected by: Date:
Verified by: Date:

REVIEW PHASE: ☐ Detail Check ☐ Internal Review ☐ Design Review ☐ TxDOT ☐ Drawing ☐ Report ☐ Other:
Prepared By: Date:
☐ Drawing Checked Against Calculations ☐ Calculations Check Confirmed

Plotted: 4/17/2017 6:18:02 PM
Pen Table: HBR_RTWL.tbl
Design File: pw:\\stantec-sc-pw.bentley.com:stantec-sc-pw\Documents\01 Projects\HBR\Build Work\Design\07-Walls\07.01-Sheets\HBR_RET_RW114_DT01.dgn

SNW204-1

P.I. STA 22+23.79
Δ = 3° 31′ 52.13" (LT)
T = 59.46
L = 118.88
R = 1928.86
P.C. STA 21+64.34
P.T. STA 22+83.21
TANGENT BRG @ PC = S 9° 15′ 44.19" W
TANGENT BRG @ PT = S 5° 43′ 52.06" W

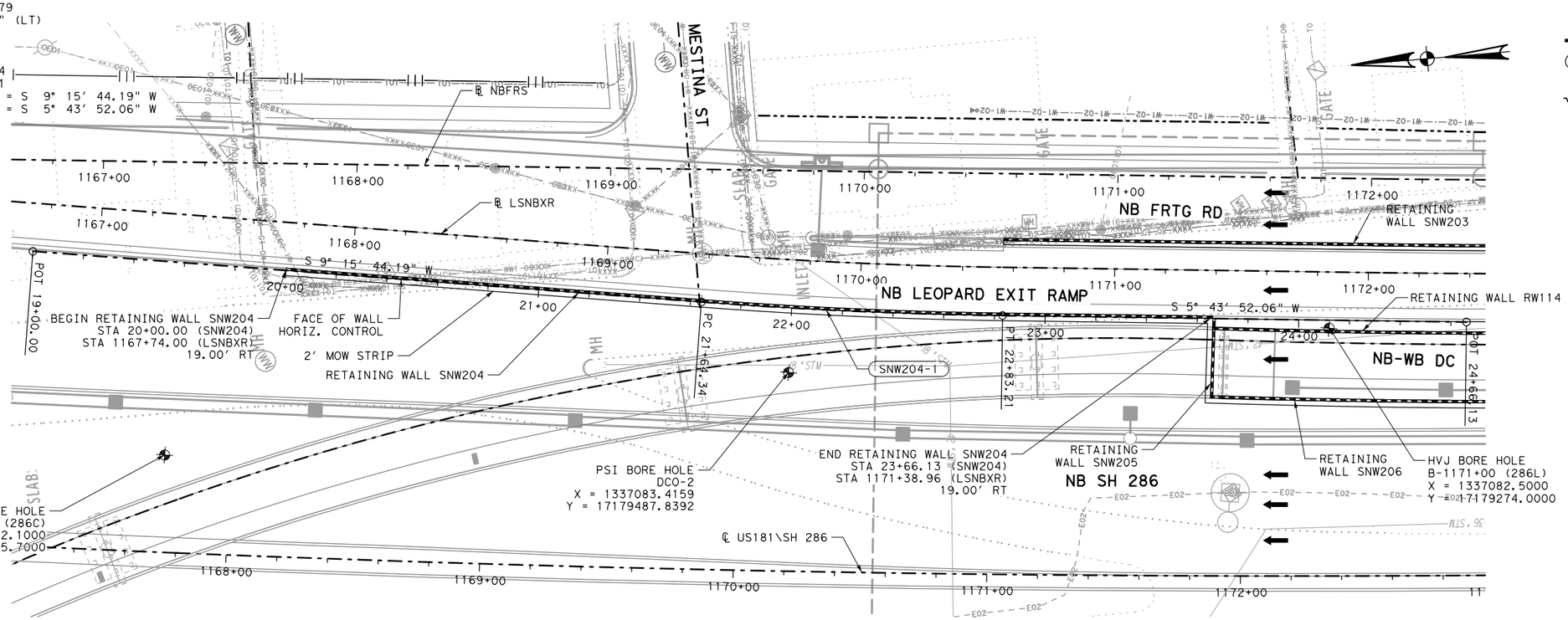

LEGEND

- PROPOSED TRAFFIC
- PROPOSED RETAINING WALL
- RWXXX-1 HORIZONTAL CURVE
- BORE LOCATION
- TEMPORARY SPL SHORING

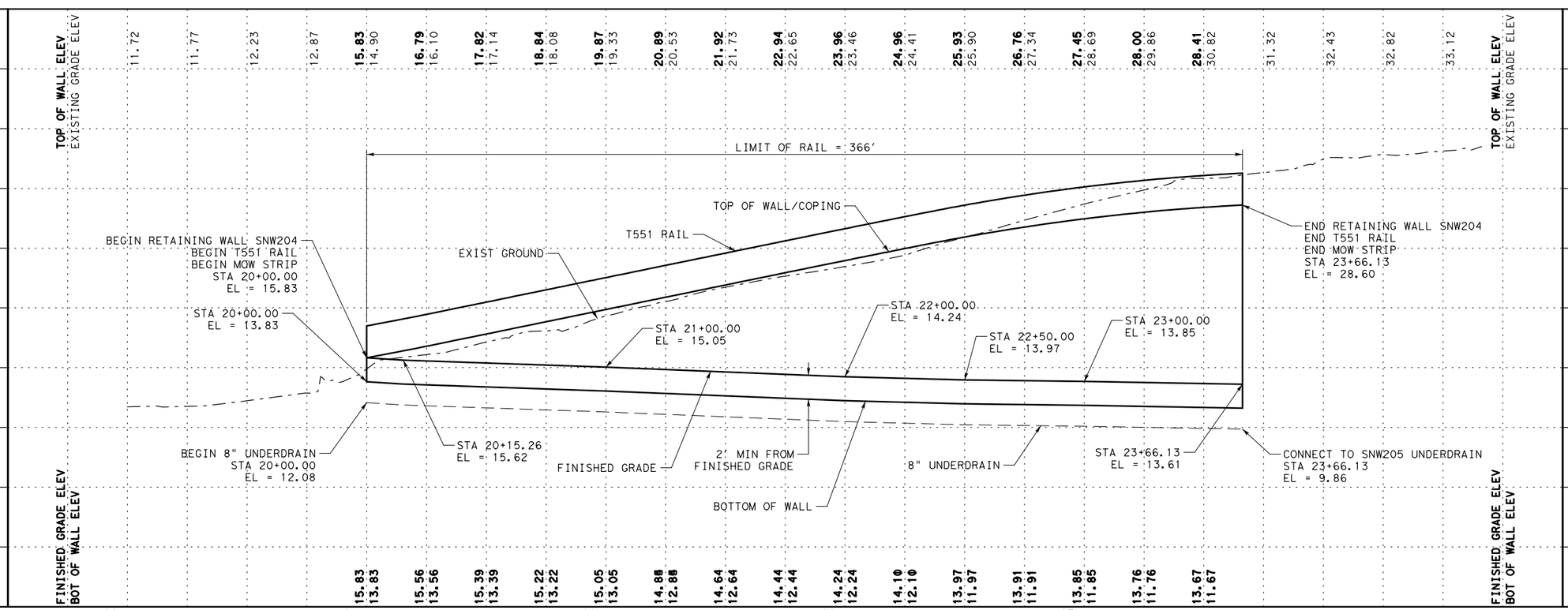

PROJECT
US 181 HARBOR BRIDGE

Checked by: Date:
Back-Checked by: Date:
Corrected by: Date:
Verified by: Date:

☐ Detail Check ☐ Internal Review ☐ Design Review ☐ TxDOT
☐ Drawing ☐ Report ☐ Other:
Prepared By: Date:
☐ Drawing Checked Against Calculations ☐ Calculations Check Confirmed
REVIEW PHASE

Plotted: 4/17/2017 6:18:16 PM
Pen Table: HBR_RTWL.tbl
Design File: pw:\\stantec-sc-pw.bentley.com:stantec-sc-pw\Documents\01 Projects\HBR\Build Work\Design\07-Walls\07.01-Sheets\HBR_RET_SNW204_PP01.dgn

NO.	REVISIONS	BY	DATE

PRELIMINARY
FOR REVIEW ONLY
THESE DOCUMENTS ARE PRELIMINARY AND SUBJECT TO CHANGE. THEY ARE NOT INTENDED FOR CONSTRUCTION OR BIDDING. THEY WERE PREPARED BY, OR UNDER THE SUPERVISION OF:
Engineer: JEFFREY E. WESANEN
P.E. No.: 117522
Date: 4/17/2017

ADVANCED STATUS

NOT FOR CONSTRUCTION

US 181 HARBOR BRIDGE

RETAINING WALL LAYOUT SNW204 (PACKAGE 5.0.01)

SCALE: 1"=50′ H
1"=10′ V

FLATIRON/DRAGADOS LLC

Stantec
Engineered by Stantec Consulting Services Inc.
Texas Registered Engineering Firm F-6324

Texas Department of Transportation
© 2017

SHEET 1 OF 1

FED. RD. DIV. NO.	FEDERAL AID PROJECT NO.		SHEET NO.
6	HP X597(1)		RTWL 003
STATE	STATE DIST. NO.	COUNTY	
TEXAS	CRP	NUECES	
CONT.	SECT	JOB	HIGHWAY NO.
0101	06	095	US181

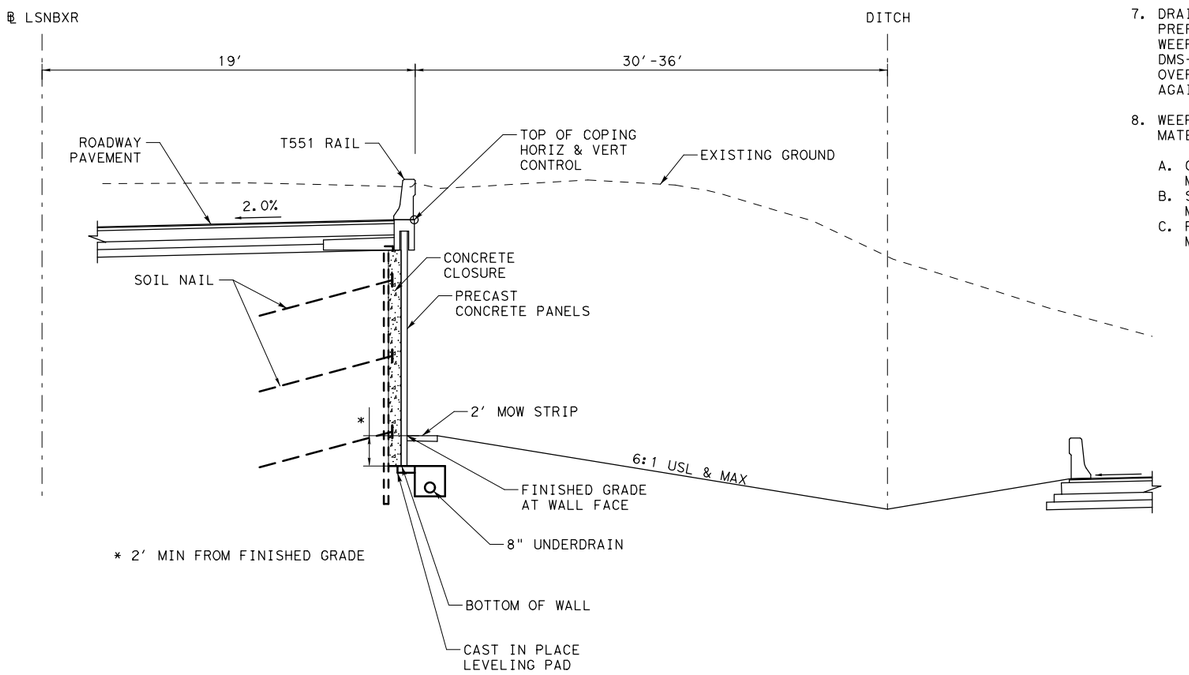

SNW204 SECTION

STA 20+00.00 TO STA 23+66.13

NOTES:

1. SEE ROADWAY, BRIDGE, DRAINAGE, LIGHTING, AND BORING LOG SHEETS FOR ADDITIONAL INFORMATION.
2. REFER TO APPROVED AESTHETICS PLAN FOR AESTHETIC TREATMENT, LAYOUT, AND SURFACE FINISHES FOR WALL PANELS, COPING, RAIL, AND RIPRAP.
3. REFER TO NAIL LAYOUTS AND DETAILS FOR ADDITIONAL INFORMATION AND NOTES REGARDING MATERIALS, MINIMUM NAIL SPACING AND LENGTHS, AND NAIL TESTING REQUIREMENTS.
4. ALL CONCRETE SHALL BE CLASS C UNLESS OTHERWISE NOTED.
5. ALL REINFORCING STEEL SHALL BE GRADE 60.
6. PNEUMATICALLY PLACED CONCRETE SHALL COMPLY WITH REQUIREMENTS ITEM 431 PNEUMATICALLY PLACED CONCRETE, CLASS II.
7. DRAINAGE SYSTEM SHALL CONSIST OF 2'-0" PANELS OF PREFABRICATED SOIL DRAINAGE MATS EMPTYING INTO 2" WEEPHOLES. FILTER FABRIC SHALL MEET THE REQUIREMENTS OF DMS-6200. PNEUMATICALLY PLACED CONCRETE SHALL BE PLACED OVER THE DRAINAGE MATS, WITH THE DRAINAGE MATS PLACED AGAINST THE SOIL.
8. WEEPHOLE COVERING SHALL BE ONE OF THE FOLLOWING MATERIAL TYPES:
   A. GALVANIZED STEEL WIRE CLOTH WITH 1/2" TO 1/4" MESH, MINIMUM WIRE DIAMETER OF 0.047".
   B. STAINLESS STEEL TYPE 304 OR 316 WITH 1/2" TO 1/4" MESH, MINIMUM WIRE DIAMETER OF 0.047".
   C. POLYETHYLENE OR POLYPROPYLENE GEONET WITH 0.15", MINIMUM THICKNESS, SUCH AS TENSAR DN-4 OR EQUAL.
9. THE SLOPE IN FRONT OF THE RETAINING WALL SHALL BE REMOVED IN LIFTS. THE DEPTH OF EACH LIFT SHALL BE LIMITED TO THE AMOUNT NECESSARY TO INSTALL A SINGLE HORIZONTAL ROW OF SOIL NAILS. AT NO TIME SHALL MORE THAN 5'-0" OF UNNAILED VERTICAL CUT BE EXPOSED. THE LENGTH OF EACH LIFT REMOVED SHALL BE LIMITED TO THE AMOUNT THAT CAN BE NAILED IN ONE DAY. AT NO TIME SHALL ANY UNNAILED CUT FACE BE EXPOSED FOR OVER 48 HOURS.
10. UPON COMPLETION OF EACH DAY'S INSTALLATION OF NAILS, PNEUMATICALLY PLACED CONCRETE SHALL BE APPLIED TO THE CUT FACE. THE CONCRETE SHALL BE REINFORCED WITH A SINGLE LAYER OF WELDED WIRE REINFORCING FABRIC, 4" X 4" W2.9.
11. THE PERMANENT CONCRETE FACIA WALL SHALL BE COMPLETED WITHIN 45 WORKING DAYS OF THE COMPLETION OF NAIL PLACEMENT.
12. PROVIDE POSITIVE DRAINAGE DURING CONSTRUCTION AND POST CONSTRUCTION PERIOD.
13. SQUARE FOOT SURFACE AREA OF RETAINING WALL IS MEASURED FROM TOP OF WALL TO BOTTOM OF WALL UNLESS NOTED OTHERWISE.
14. THE UTILITY INFORMATION SHOWN IS NOT GUARANTEED TO BE ACCURATE OR ALL INCLUSIVE. CONTRACTOR SHALL VERIFY THE LOCATIONS OF ALL UTILITIES PRIOR TO CONSTRUCTION. THE CONTRACTOR IS RESPONSIBLE FOR ALL DAMAGES TO UTILITIES CAUSED BY CONSTRUCTION OPERATIONS.
15. NO CONSTRUCTION SHALL BEGIN UNTIL ALL REFERENCED SHEETS ARE APPROVED FOR CONSTRUCTION.

SNW204 ESTIMATED QUANTITES

ITEM	DESC	DESCRIPTION	QUANT.	UNITS
410	6001	SOIL NAIL ANCHORS		LF
423	6017	RET WALL (SOIL NAILED)(FASCIA)(HOR SCH)	3837	SF
432	6045	RIPRAP (MOW STRIP)(4 IN)	9	CY
450	6014	RAIL (TY T551)	366	LF

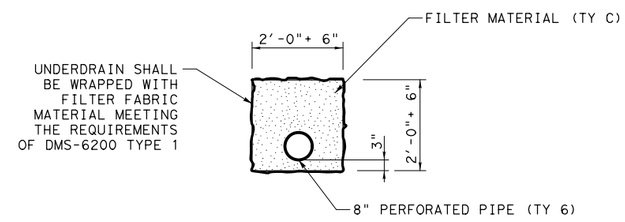

UNDERDRAIN DETAIL

NO.	REVISIONS	BY	DATE

PRELIMINARY
FOR REVIEW ONLY
THESE DOCUMENTS ARE PRELIMINARY AND SUBJECT TO CHANGE. THEY ARE NOT INTENDED FOR CONSTRUCTION OR BIDDING. THEY WERE PREPARED BY, OR UNDER THE SUPERVISION OF:
Engineer: JEFFREY E. WESANEN
P.E. No.: 117522
Date: 4/17/2017

ADVANCED STATUS

NOT FOR CONSTRUCTION

US 181 HARBOR BRIDGE

RETAINING WALL SECTION & DETAILS SNW204 (PACKAGE 5.0.01)

SCALE: 1"=10'

FLATIRON/DRAGADOS LLC

Stantec
Engineered by Stantec Consulting Services Inc.
Texas Registered Engineering Firm F-6324

Texas Department of Transportation
© 2017
SHEET 1 OF 1

FED. RD. DIV. NO.	FEDERAL AID PROJECT NO.		SHEET NO.
6	HP X597(1)		RTWL 004
STATE	STATE DIST. NO.	COUNTY	
TEXAS	CRP	NUECES	
CONT.	SECT	JOB	HIGHWAY NO.
0101	06	095	US181

PROJECT: US 181 HARBOR BRIDGE

Checked by: Date: | Back-Checked by: Date: | Corrected by: Date: | Verified by: Date:

☐ Detail Check ☐ Internal Review ☐ Design Review ☐ TxDOT
☐ Drawing ☐ Report ☐ Other:
Prepared By: Date:
☐ Drawing Checked Against Calculations ☐ Calculations Check Confirmed
REVIEW PHASE

Plotted: 4/17/2017 6:18:24 PM
Pen Table: HBR_RTWL.tbl
Design File: pw:\\stantec-sc-pw.bentley.com:stantec-sc-pw\Documents\01 Projects\HBR\Build Work\Design\07-Walls\07.01-Sheets\HBR_RET_SNW204_DT01.dgn

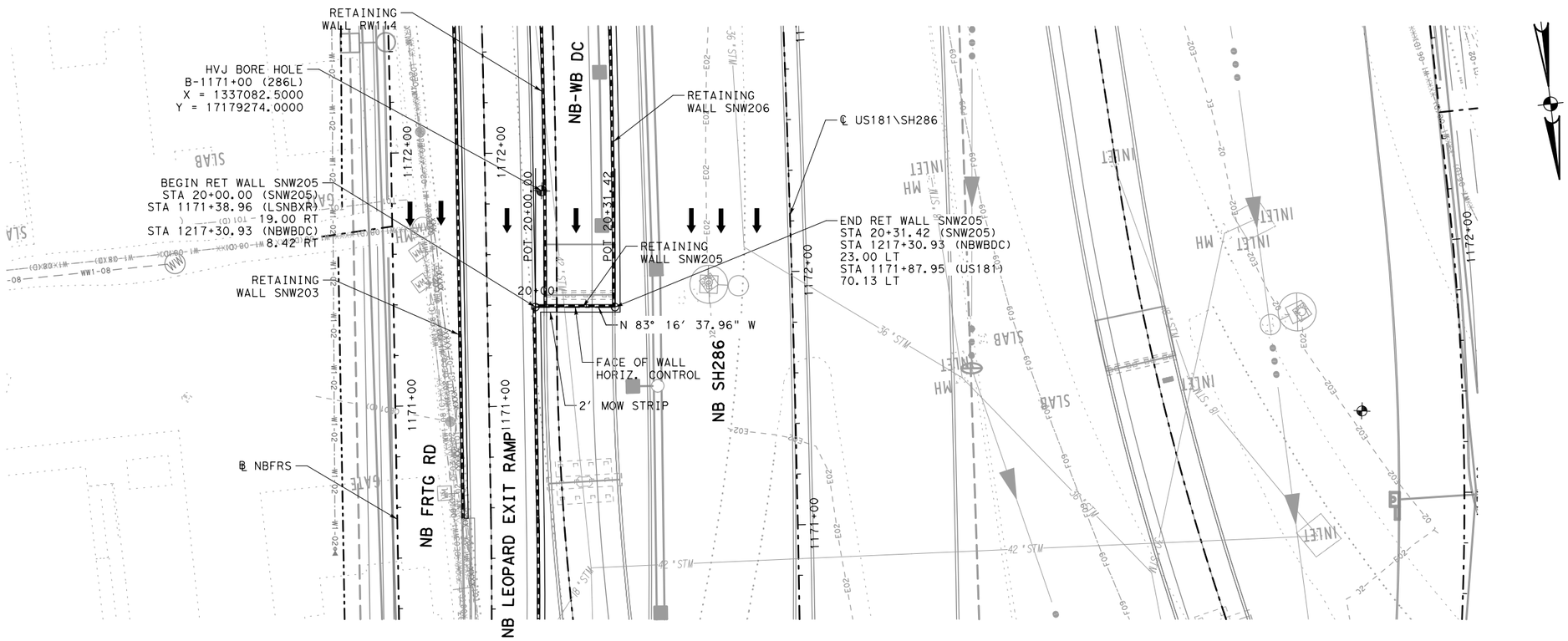

LEGEND

- PROPOSED TRAFFIC
- PROPOSED RETAINING WALL
- RWXXX-1 HORIZONTAL CURVE
- BORE LOCATION
- TEMPORARY SPL SHORING

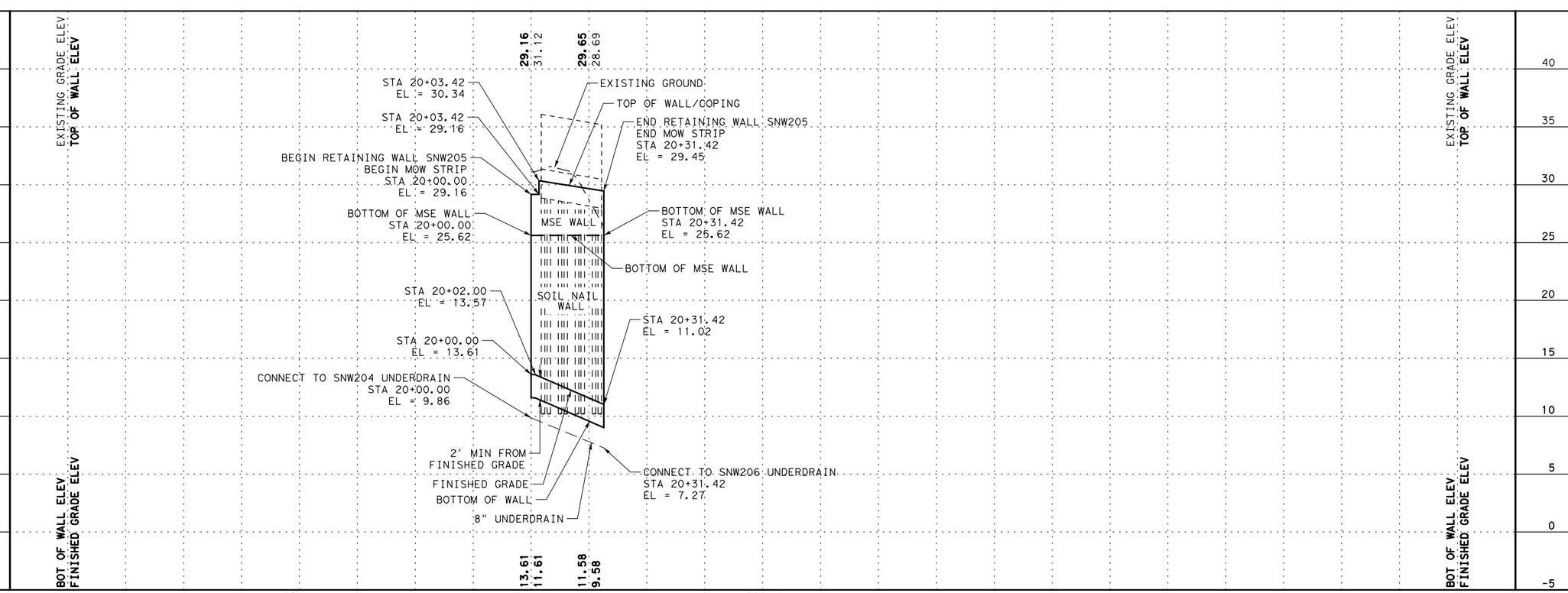

PROJECT
US 181 HARBOR BRIDGE

Checked by:	Date:		
Back-Checked by:	Date:		
Corrected by:	Date:		
Verified by:	Date:		

☐ Detail Check ☐ Internal Review ☐ Design Review ☐ TxDOT
☐ Drawing ☐ Report ☐ Other:
Prepared By: Date:
☐ Drawing Checked Against Calculations ☐ Calculations Check Confirmed
REVIEW PHASE

Plotted: 4/17/2017 6:18:37 PM
Pen Table: HBR_RTWL.tbl
Design File: pw:\\stantec-sc-pw.bentley.com:stantec-sc-pw\Documents\01 Projects\HBR\Build Work\Design\07-Walls\07.01-Sheets\HBR_RET_SNW205_PP01.dgn

NO.	REVISIONS	BY	DATE

PRELIMINARY
FOR REVIEW ONLY
THESE DOCUMENTS ARE PRELIMINARY AND SUBJECT TO CHANGE. THEY ARE NOT INTENDED FOR CONSTRUCTION OR BIDDING. THEY WERE PREPARED BY, OR UNDER THE SUPERVISION OF:
Engineer: JEFFREY E. WESANEN
P.E. No.: 117522
Date: 4/17/2017

ADVANCED STATUS

NOT FOR CONSTRUCTION

US 181 HARBOR BRIDGE

RETAINING WALL LAYOUT SNW205 (PACKAGE 5.0.01)

SCALE: 1"=50' H
1"=10' V

FLATIRON/DRAGADOS LLC

Stantec
Engineered by Stantec Consulting Services Inc.
Texas Registered Engineering Firm F-6324

Texas Department of Transportation
© 2017

SHEET 1 OF 1

FED. RD. DIV. NO.	FEDERAL AID PROJECT NO.		SHEET NO.
6	HP X597(1)		RTWL 005
STATE	STATE DIST. NO.	COUNTY	
TEXAS	CRP	NUECES	
CONT.	SECT	JOB	HIGHWAY NO.
0101	06	095	US181

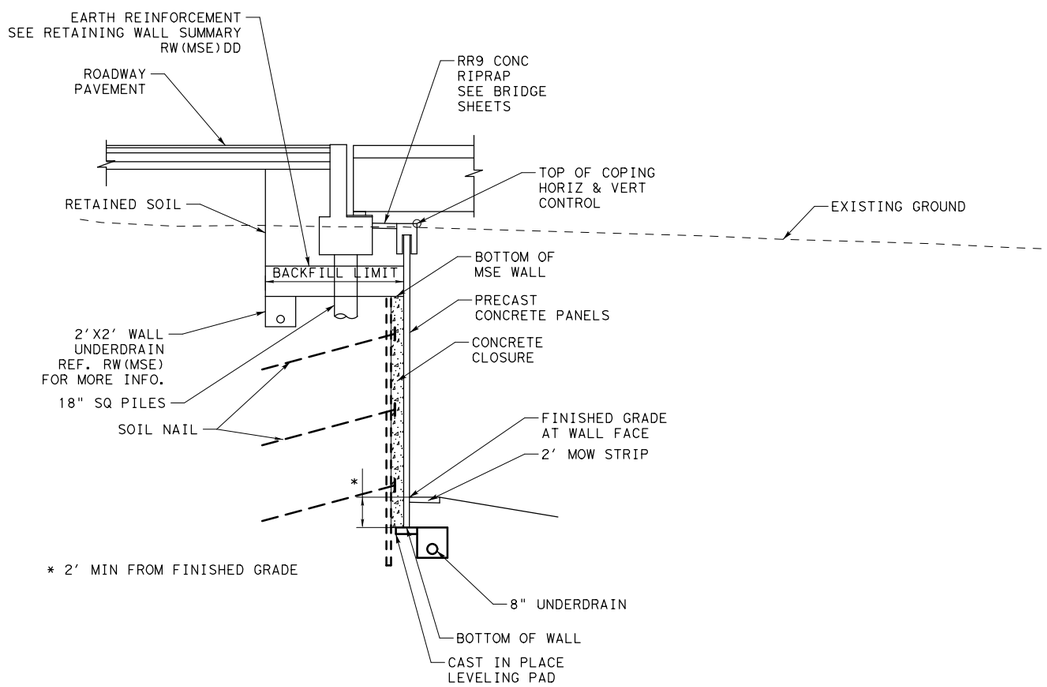

SNW205 SECTION

STA 20+00.00 TO STA 20+31.42

SOIL NAIL WALL NOTES:

1. SEE ROADWAY, BRIDGE, DRAINAGE, LIGHTING, AND BORING LOG SHEETS FOR ADDITIONAL INFORMATION.
2. REFER TO APPROVED AESTHETICS PLAN FOR AESTHETIC TREATMENT, LAYOUT, AND SURFACE FINISHES FOR WALL PANELS, COPING, RAIL, AND RIPRAP.
3. REFER TO NAIL LAYOUTS AND DETAILS FOR ADDITIONAL INFORMATION AND NOTES REGARDING MATERIALS, MINIMUM NAIL SPACING AND LENGTHS, AND NAIL TESTING REQUIREMENTS.
4. ALL CONCRETE SHALL BE CLASS C UNLESS OTHERWISE NOTED.
5. ALL REINFORCING STEEL SHALL BE GRADE 60.
6. PNEUMATICALLY PLACED CONCRETE SHALL COMPLY WITH REQUIREMENTS ITEM 431 PNEUMATICALLY PLACED CONCRETE, CLASS II.
7. DRAINAGE SYSTEM SHALL CONSIST OF 2'-0" PANELS OF PREFABRICATED SOIL DRAINAGE MATS EMPTYING INTO 2" WEEPHOLES. FILTER FABRIC SHALL MEET THE REQUIREMENTS OF DMS-6200. PNEUMATICALLY PLACED CONCRETE SHALL BE PLACED OVER THE DRAINAGE MATS, WITH THE DRAINAGE MATS PLACED AGAINST THE SOIL.
8. WEEPHOLE COVERING SHALL BE ONE OF THE FOLLOWING MATERIAL TYPES:
   A. GALVANIZED STEEL WIRE CLOTH WITH 1/2" TO 1/4" MESH, MINIMUM WIRE DIAMETER OF 0.047".
   B. STAINLESS STEEL TYPE 304 OR 316 WITH 1/2" TO 1/4" MESH, MINIMUM WIRE DIAMETER OF 0.047".
   C. POLYETHYLENE OR POLYPROPYLENE GEONET WITH 0.15", MINIMUM THICKNESS, SUCH AS TENSAR DN-4 OR EQUAL.
9. THE SLOPE IN FRONT OF THE RETAINING WALL SHALL BE REMOVED IN LIFTS. THE DEPTH OF EACH LIFT SHALL BE LIMITED TO THE AMOUNT NECESSARY TO INSTALL A SINGLE HORIZONTAL ROW OF SOIL NAILS. AT NO TIME SHALL MORE THAN 5'-0" OF UNNAILED VERTICAL CUT BE EXPOSED. THE LENGTH OF EACH LIFT REMOVED SHALL BE LIMITED TO THE AMOUNT THAT CAN BE NAILED IN ONE DAY. AT NO TIME SHALL ANY UNNAILED CUT FACE BE EXPOSED FOR OVER 48 HOURS.
10. UPON COMPLETION OF EACH DAY'S INSTALLATION OF NAILS, PNEUMATICALLY PLACED CONCRETE SHALL BE APPLIED TO THE CUT FACE. THE CONCRETE SHALL BE REINFORCED WITH A SINGLE LAYER OF WELDED WIRE REINFORCING FABRIC, 4" X 4" W2.9.
11. THE PERMANENT CONCRETE FACIA WALL SHALL BE COMPLETED WITHIN 45 WORKING DAYS OF THE COMPLETION OF NAIL PLACEMENT.
12. PROVIDE POSITIVE DRAINAGE DURING CONSTRUCTION AND POST CONSTRUCTION PERIOD.
13. SQUARE FOOT SURFACE AREA OF RETAINING WALL IS MEASURED FROM TOP OF WALL TO BOTTOM OF WALL UNLESS NOTED OTHERWISE.
14. THE UTILITY INFORMATION SHOWN IS NOT GUARANTEED TO BE ACCURATE OR ALL INCLUSIVE. CONTRACTOR SHALL VERIFY THE LOCATIONS OF ALL UTILITIES PRIOR TO CONSTRUCTION. THE CONTRACTOR IS RESPONSIBLE FOR ALL DAMAGES TO UTILITIES CAUSED BY CONSTRUCTION OPERATIONS.
15. NO CONSTRUCTION SHALL BEGIN UNTIL ALL REFERENCED SHEETS ARE APPROVED FOR CONSTRUCTION.

SNW205 ESTIMATED QUANTITES

ITEM	DESC	DESCRIPTION	QUANT.	UNITS
410	6001	SOIL NAIL ANCHORS		LF
423	6001	RETAINING WALL (MSE)	132	SF
423	6017	RET WALL (SOIL NAILED)(FASCIA)(HOR SCH)	479	SF
432	6045	RIPRAP (MOW STRIP)(4 IN)	8	CY

MSE WALL NOTES:

1. SEE ROADWAY, BRIDGE, DRAINAGE, LIGHTING, AND BORING LOG SHEETS FOR ADDITIONAL INFORMATION.
2. REFER TO APPROVED AESTHETICS PLAN FOR AESTHETIC TREATMENT, LAYOUT, AND SURFACE FINISHES FOR WALL PANELS, COPING, RAIL, AND RIPRAP.
3. REFER TO TXDOT STANDARD RW(MSE), RW(TRF), AND RW(MSE)DD FOR ADDITIONAL INFORMATION. EMBANKMENT EARTH REINFORCEMENTS SHALL HAVE A MINIMUM LENGTH EQUAL TO OR GREATER THAN THE REQUIREMENTS SHOWN IN RW(MSE)DD.
4. WALL MANUFACTURER MAY ADJUST AND SHALL ACCOMMODATE ANY INLETS POSITIONED WITHIN THE REINFORCING ZONE OF THE MSE WALL. ADJUSTMENTS SHALL BE SHOWN IN THE SHOP DRAWINGS.
5. PROVIDE POSITIVE DRAINAGE DURING CONSTRUCTION AND POST CONSTRUCTION PERIOD.
6. SQUARE FOOT SURFACE AREA OF RETAINING WALL IS MEASURED FROM TOP OF WALL TO BOTTOM OF WALL UNLESS NOTED OTHERWISE.
7. THE UTILITY INFORMATION SHOWN IS NOT GUARANTEED TO BE ACCURATE OR ALL INCLUSIVE. CONTRACTOR SHALL VERIFY THE LOCATIONS OF ALL UTILITIES PRIOR TO CONSTRUCTION. THE CONTRACTOR IS RESPONSIBLE FOR ALL DAMAGES TO UTILITIES CAUSED BY CONSTRUCTION OPERATIONS.
8. NO CONSTRUCTION SHALL BEGIN UNTIL ALL REFERENCED SHEETS ARE APPROVED FOR CONSTRUCTION.

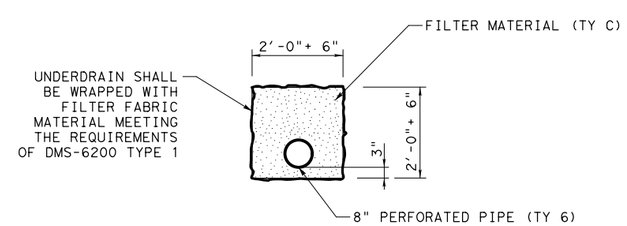

UNDERDRAIN DETAIL

NO.	REVISIONS	BY	DATE

PRELIMINARY
FOR REVIEW ONLY
THESE DOCUMENTS ARE PRELIMINARY AND SUBJECT TO CHANGE. THEY ARE NOT INTENDED FOR CONSTRUCTION OR BIDDING. THEY WERE PREPARED BY, OR UNDER THE SUPERVISION OF:
Engineer: JEFFREY E. WESANEN
P.E. No.: 117522
Date: 4/17/2017

ADVANCED STATUS

NOT FOR CONSTRUCTION

US 181 HARBOR BRIDGE

RETAINING WALL SECTION & DETAILS SNW205 (PACKAGE 5.0.01)

SCALE: 1"=10'

FLATIRON/DRAGADOS LLC

Stantec
Engineered by Stantec Consulting Services Inc.
Texas Registered Engineering Firm F-6324

Texas Department of Transportation
© 2017
SHEET 1 OF 1

FED. RD. DIV. NO.	FEDERAL AID PROJECT NO.		SHEET NO.
6	HP X597(1)		RTWL 006
STATE	STATE DIST. NO.	COUNTY	
TEXAS	CRP	NUECES	
CONT.	SECT	JOB	HIGHWAY NO.
0101	06	095	US181

PROJECT
US 181 HARBOR BRIDGE

Checked by: Date:
Back-Checked by: Date:
Corrected by: Date:
Verified by: Date:

☐ Detail Check ☐ Internal Review ☐ Design Review ☐ TxDOT
☐ Drawing ☐ Report ☐ Other:
Prepared By: Date:
☐ Drawing Checked Against Calculations ☐ Calculations Check Confirmed

REVIEW PHASE

Plotted: 4/17/2017 6:18:44 PM
Pen Table: HBR_RTWL.tbl
Design File: pw:\\stantec-sc-pw.bentley.com:stantec-sc-pw\Documents\01 Projects\HBR\Build Work\Design\07-Walls\07.01-Sheets\HBR_RET_SNW205_DT01.dgn

SNW206-1

P.I. STA 21+77.34
Δ = 8° 07′ 08.76" (LT)
T = 277.34
L = 553.74
R = 3907.72
P.C. STA 19+00.00
P.T. STA 24+53.74
TANGENT BRG @ PC = S 8° 11′ 20.44" W
TANGENT BRG @ PT = S 0° 04′ 11.68" W

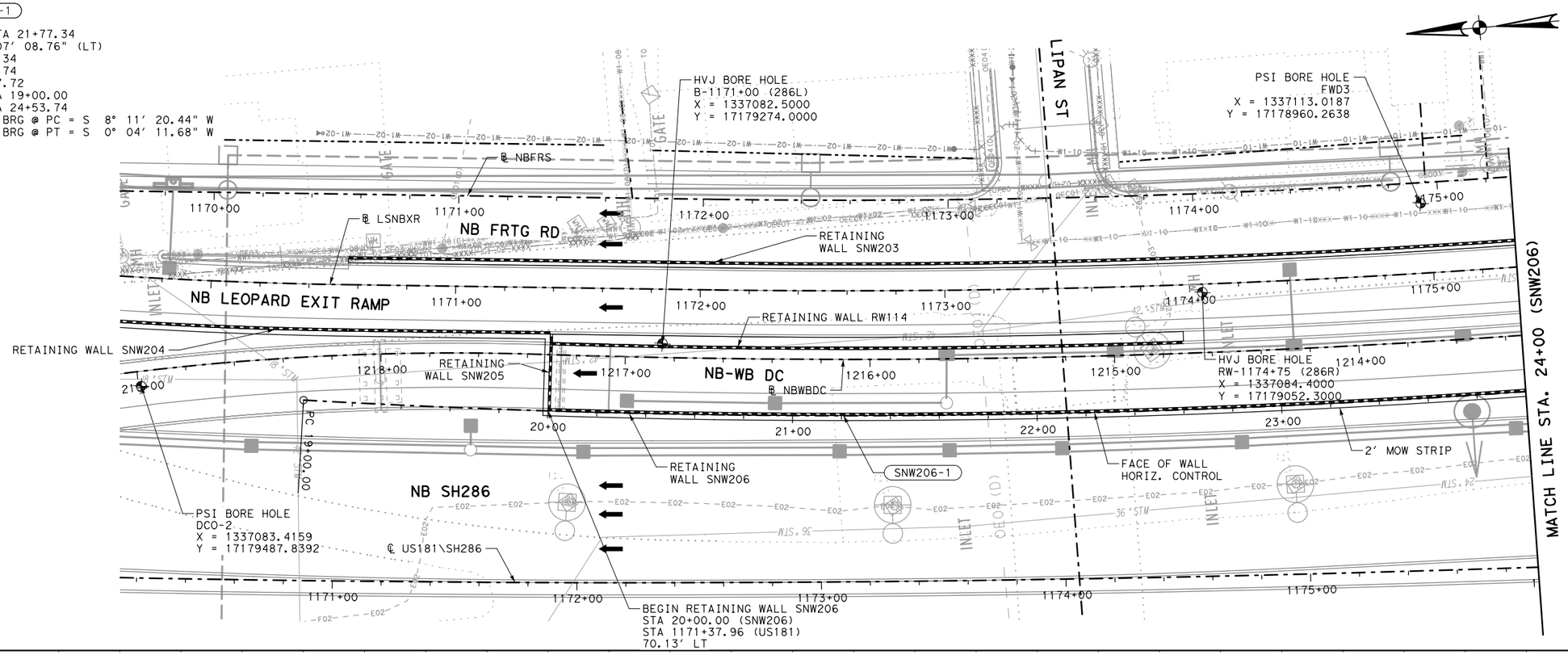

LEGEND

- PROPOSED TRAFFIC
- PROPOSED RETAINING WALL
- RWXXX-1 HORIZONTAL CURVE
- BORE LOCATION
- TEMPORARY SPL SHORING

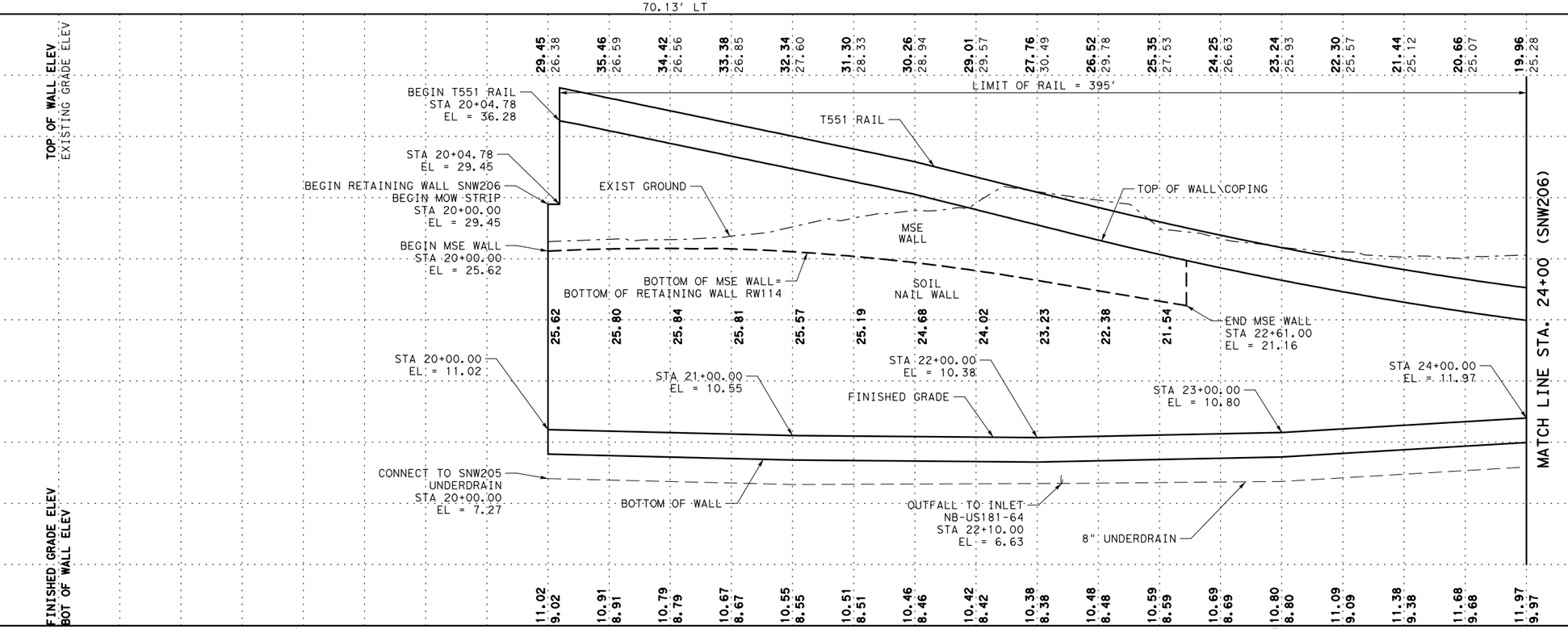

PROJECT
US 181 HARBOR BRIDGE

Checked by: Date:
Back-Checked by: Date:
Corrected by: Date:
Verified by: Date:

☐ Detail Check ☐ Internal Review ☐ Design Review ☐ TxDOT
☐ Drawing ☐ Report ☐ Other:
Prepared By: Date:
☐ Drawing Checked Against Calculations ☐ Calculations Check Confirmed
REVIEW PHASE

Plotted: 4/17/2017 6:18:59 PM
Pen Table: HBR_RTWL.tbl
Design File: pw:\\stantec-sc-pw.bentley.com:stantec-sc-pw\Documents\01 Projects\HBR\Build Work\Design\07-Walls\07.01-Sheets\HBR_RET_SNW206_PP01.dgn

NO.	REVISIONS	BY	DATE

PRELIMINARY
FOR REVIEW ONLY
THESE DOCUMENTS ARE PRELIMINARY AND SUBJECT TO CHANGE. THEY ARE NOT INTENDED FOR CONSTRUCTION OR BIDDING. THEY WERE PREPARED BY, OR UNDER THE SUPERVISION OF:
Engineer: JEFFREY E. WESANEN
P.E. No.: 117522
Date: 4/17/2017

ADVANCED STATUS

NOT FOR CONSTRUCTION

US 181 HARBOR BRIDGE

RETAINING WALL LAYOUT SNW206 (PACKAGE 5.0.01)

SCALE: 1"=50′ H
1"=10′ V

FLATIRON/DRAGADOS LLC

Stantec
Engineered by Stantec Consulting Services Inc.
Texas Registered Engineering Firm F-6324

Texas Department of Transportation
© 2017

SHEET 1 OF 2

FED. RD. DIV. NO.	FEDERAL AID PROJECT NO.	SHEET NO.
6	HP X597(1)	RTWL 007

STATE	STATE DIST. NO.	COUNTY
TEXAS	CRP	NUECES

CONT.	SECT	JOB	HIGHWAY NO.
0101	06	095	US181

SNW206-1

P.I. STA 21+77.34
Δ = 8° 07′ 08.76" (LT)
T = 277.34
L = 553.74
R = 3907.72
P.C. STA 19+00.00
P.T. STA 24+53.74
TANGENT BRG @ PC = S 8° 11′ 20.44" W
TANGENT BRG @ PT = S 0° 04′ 11.68" W

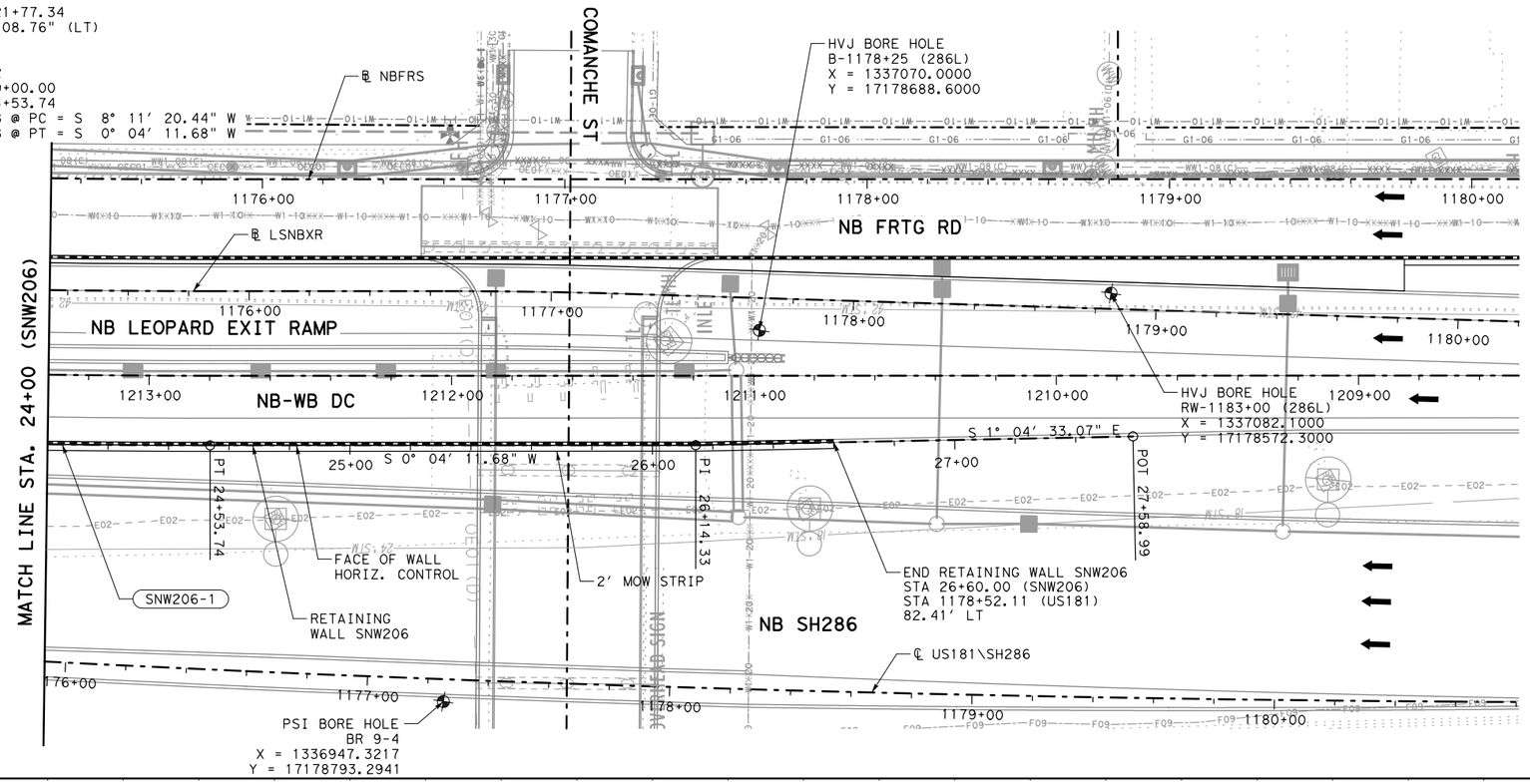

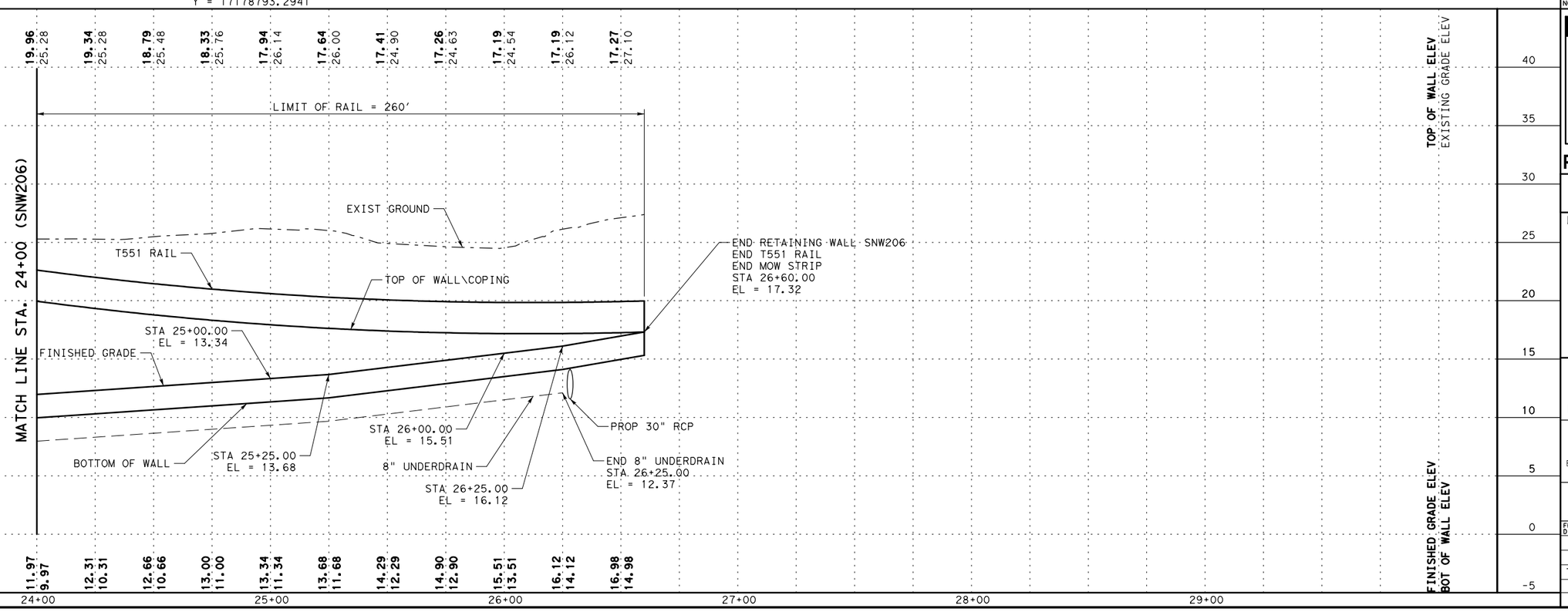

LEGEND

- PROPOSED TRAFFIC
- PROPOSED RETAINING WALL
- RWXXX-1 HORIZONTAL CURVE
- BORE LOCATION
- TEMPORARY SPL SHORING

NO.	REVISIONS	BY	DATE

PRELIMINARY
FOR REVIEW ONLY
THESE DOCUMENTS ARE PRELIMINARY AND SUBJECT TO CHANGE. THEY ARE NOT INTENDED FOR CONSTRUCTION OR BIDDING. THEY WERE PREPARED BY, OR UNDER THE SUPERVISION OF:
Engineer: JEFFREY E. WESANEN
P.E. No.: 117522
Date: 4/17/2017

PREFINAL SUBMITTAL

NOT FOR CONSTRUCTION

US 181 HARBOR BRIDGE

RETAINING WALL LAYOUT SNW206 (PACKAGE 5.0.01)

SCALE: 1"=50′ H
1"=10′ V

FLATIRON/DRAGADOS LLC

Stantec
Engineered by Stantec Consulting Services Inc.
Texas Registered Engineering Firm F-6324

Texas Department of Transportation
© 2017
SHEET 2 OF 2

FED. RD. DIV. NO.	FEDERAL AID PROJECT NO.		SHEET NO.
6	HP X597(1)		RTWL 008
STATE	STATE DIST. NO.	COUNTY	
TEXAS	CRP	NUECES	
CONT.	SECT	JOB	HIGHWAY NO.
0101	06	095	US181

PROJECT
US 181 HARBOR BRIDGE

Checked by: Date:
Back-Checked by: Date:
Corrected by: Date:
Verified by: Date:

☐ Detail Check ☐ Internal Review ☐ Design Review ☐ TxDOT
☐ Drawing ☐ Report ☐ Other:
Prepared By: Date:
☐ Drawing Checked Against Calculations ☐ Calculations Check Confirmed
REVIEW PHASE

Plotted: 4/17/2017 6:19:11 PM
Pen Table: HBR_RTWL.tbl
Design File: pw:\\stantec-sc-pw.bentley.com:stantec-sc-pw\Documents\01 Projects\HBR\Build Work\Design\07-Walls\07.01-Sheets\HBR_RET_SNW206_PP02.dgn

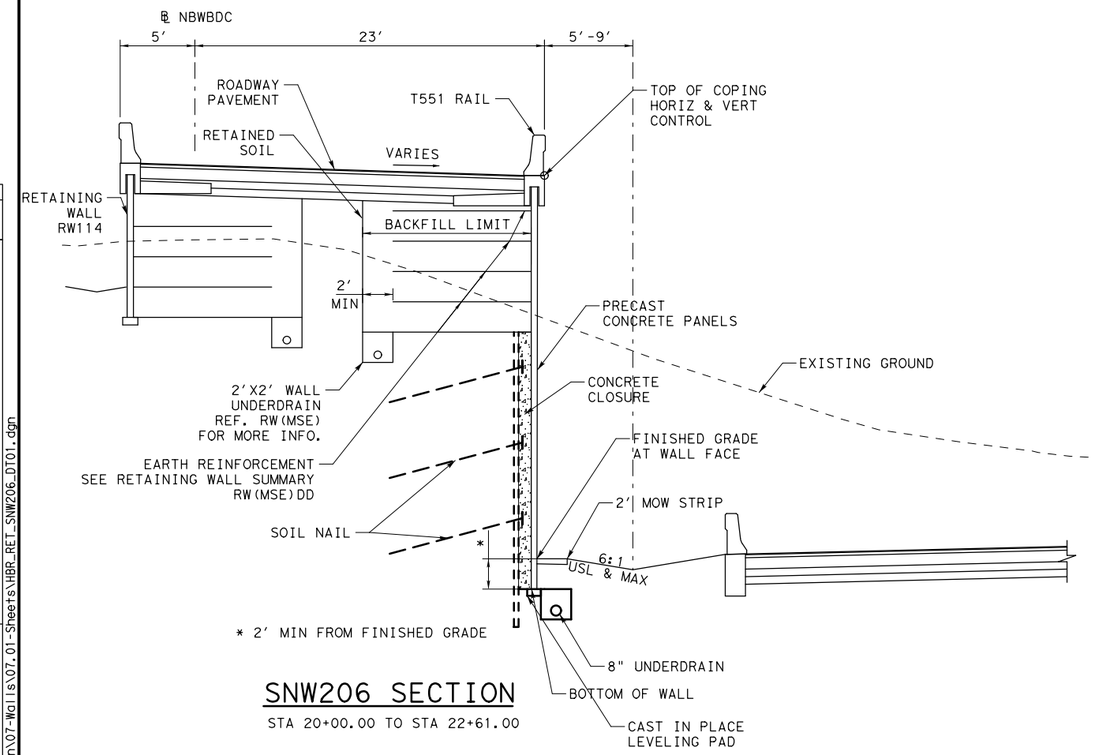

SNW206 SECTION

STA 20+00.00 TO STA 22+61.00

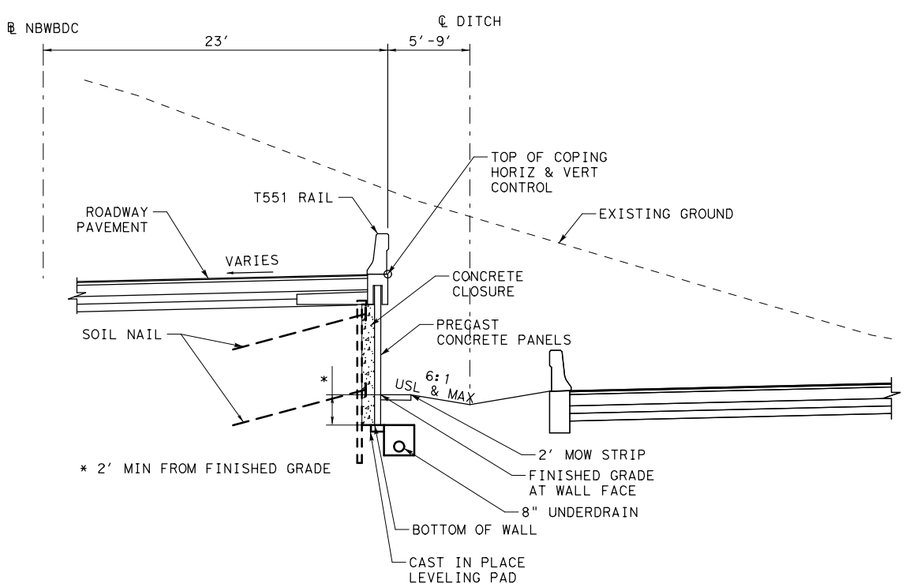

SNW206 SECTION

STA 22+61.00 TO STA 26+60.00

SOIL NAIL WALL NOTES:

1. SEE ROADWAY, BRIDGE, DRAINAGE, LIGHTING, AND BORING LOG SHEETS FOR ADDITIONAL INFORMATION.
2. REFER TO APPROVED AESTHETICS PLAN FOR AESTHETIC TREATMENT, LAYOUT, AND SURFACE FINISHES FOR WALL PANELS, COPING, RAIL, AND RIPRAP.
3. REFER TO NAIL LAYOUTS AND DETAILS FOR ADDITIONAL INFORMATION AND NOTES REGARDING MATERIALS, MINIMUM NAIL SPACING AND LENGTHS, AND NAIL TESTING REQUIREMENTS.
4. ALL CONCRETE SHALL BE CLASS C UNLESS OTHERWISE NOTED.
5. ALL REINFORCING STEEL SHALL BE GRADE 60.
6. PNEUMATICALLY PLACED CONCRETE SHALL COMPLY WITH REQUIREMENTS ITEM 431 PNEUMATICALLY PLACED CONCRETE, CLASS II.
7. DRAINAGE SYSTEM SHALL CONSIST OF 2'-0" PANELS OF PREFABRICATED SOIL DRAINAGE MATS EMPTYING INTO 2" WEEPHOLES. FILTER FABRIC SHALL MEET THE REQUIREMENTS OF DMS-6200. PNEUMATICALLY PLACED CONCRETE SHALL BE PLACED OVER THE DRAINAGE MATS, WITH THE DRAINAGE MATS PLACED AGAINST THE SOIL.
8. WEEPHOLE COVERING SHALL BE ONE OF THE FOLLOWING MATERIAL TYPES:
   A. GALVANIZED STEEL WIRE CLOTH WITH 1/2" TO 1/4" MESH, MINIMUM WIRE DIAMETER OF 0.047".
   B. STAINLESS STEEL TYPE 304 OR 316 WITH 1/2" TO 1/4" MESH, MINIMUM WIRE DIAMETER OF 0.047".
   C. POLYETHYLENE OR POLYPROPYLENE GEONET WITH 0.15", MINIMUM THICKNESS, SUCH AS TENSAR DN-4 OR EQUAL.
9. THE SLOPE IN FRONT OF THE RETAINING WALL SHALL BE REMOVED IN LIFTS. THE DEPTH OF EACH LIFT SHALL BE LIMITED TO THE AMOUNT NECESSARY TO INSTALL A SINGLE HORIZONTAL ROW OF SOIL NAILS. AT NO TIME SHALL MORE THAN 5'-0" OF UNNAILED VERTICAL CUT BE EXPOSED. THE LENGTH OF EACH LIFT REMOVED SHALL BE LIMITED TO THE AMOUNT THAT CAN BE NAILED IN ONE DAY. AT NO TIME SHALL ANY UNNAILED CUT FACE BE EXPOSED FOR OVER 48 HOURS.
10. UPON COMPLETION OF EACH DAY'S INSTALLATION OF NAILS, PNEUMATICALLY PLACED CONCRETE SHALL BE APPLIED TO THE CUT FACE. THE CONCRETE SHALL BE REINFORCED WITH A SINGLE LAYER OF WELDED WIRE REINFORCING FABRIC, 4" X 4" W2.9.
11. THE PERMANENT CONCRETE FACIA WALL SHALL BE COMPLETED WITHIN 45 WORKING DAYS OF THE COMPLETION OF NAIL PLACEMENT.
12. PROVIDE POSITIVE DRAINAGE DURING CONSTRUCTION AND POST CONSTRUCTION PERIOD.
13. SQUARE FOOT SURFACE AREA OF RETAINING WALL IS MEASURED FROM TOP OF WALL TO BOTTOM OF WALL UNLESS NOTED OTHERWISE.
14. THE UTILITY INFORMATION SHOWN IS NOT GUARANTEED TO BE ACCURATE OR ALL INCLUSIVE. CONTRACTOR SHALL VERIFY THE LOCATIONS OF ALL UTILITIES PRIOR TO CONSTRUCTION. THE CONTRACTOR IS RESPONSIBLE FOR ALL DAMAGES TO UTILITIES CAUSED BY CONSTRUCTION OPERATIONS.
15. NO CONSTRUCTION SHALL BEGIN UNTIL ALL REFERENCED SHEETS ARE APPROVED FOR CONSTRUCTION.

SNW206 ESTIMATED QUANTITES

ITEM	DESC	DESCRIPTION	QUANT.	UNITS
410	6001	SOIL NAIL ANCHORS		LF
423	6001	RETAINING WALL (MSE)	1639	SF
423	6017	RET WALL (SOIL NAILED)(FASCIA)(HOR SCH)	7459	SF
432	6045	RIPRAP (MOW STRIP)(4 IN)	16	CY
450	6014	RAIL (TY T551)	655	LF

MSE WALL NOTES:

1. SEE ROADWAY, BRIDGE, DRAINAGE, LIGHTING, AND BORING LOG SHEETS FOR ADDITIONAL INFORMATION.
2. REFER TO APPROVED AESTHETICS PLAN FOR AESTHETIC TREATMENT, LAYOUT, AND SURFACE FINISHES FOR WALL PANELS, COPING, RAIL, AND RIPRAP.
3. REFER TO TXDOT STANDARD RW(MSE), RW(TRF), AND RW(MSE)DD FOR ADDITIONAL INFORMATION. EMBANKMENT EARTH REINFORCEMENTS SHALL HAVE A MINIMUM LENGTH EQUAL TO OR GREATER THAN THE REQUIREMENTS SHOWN IN RW(MSE)DD.
4. WALL MANUFACTURER MAY ADJUST AND SHALL ACCOMMODATE ANY INLETS POSITIONED WITHIN THE REINFORCING ZONE OF THE MSE WALL. ADJUSTMENTS SHALL BE SHOWN IN THE SHOP DRAWINGS.
5. PROVIDE POSITIVE DRAINAGE DURING CONSTRUCTION AND POST CONSTRUCTION PERIOD.
6. SQUARE FOOT SURFACE AREA OF RETAINING WALL IS MEASURED FROM TOP OF WALL TO BOTTOM OF WALL UNLESS NOTED OTHERWISE.
7. THE UTILITY INFORMATION SHOWN IS NOT GUARANTEED TO BE ACCURATE OR ALL INCLUSIVE. CONTRACTOR SHALL VERIFY THE LOCATIONS OF ALL UTILITIES PRIOR TO CONSTRUCTION. THE CONTRACTOR IS RESPONSIBLE FOR ALL DAMAGES TO UTILITIES CAUSED BY CONSTRUCTION OPERATIONS.
8. NO CONSTRUCTION SHALL BEGIN UNTIL ALL REFERENCED SHEETS ARE APPROVED FOR CONSTRUCTION.

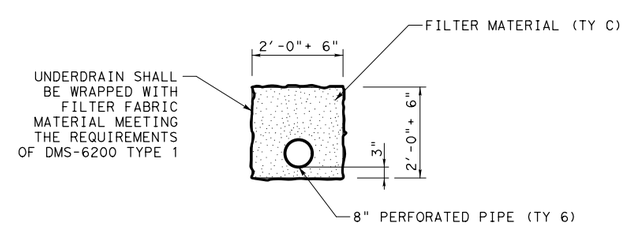

UNDERDRAIN DETAIL

NO.	REVISIONS	BY	DATE

PRELIMINARY
FOR REVIEW ONLY
THESE DOCUMENTS ARE PRELIMINARY AND SUBJECT TO CHANGE. THEY ARE NOT INTENDED FOR CONSTRUCTION OR BIDDING. THEY WERE PREPARED BY, OR UNDER THE SUPERVISION OF:
Engineer: JEFFREY E. WESANEN
P.E. No.: 117522
Date: 4/17/2017

ADVANCED STATUS

NOT FOR CONSTRUCTION

US 181 HARBOR BRIDGE

RETAINING WALL SECTION & DETAILS SNW206 (PACKAGE 5.0.01)

SCALE: 1"=10'

FLATIRON/DRAGADOS LLC

Stantec
Engineered by Stantec Consulting Services Inc.
Texas Registered Engineering Firm F-6324

Texas Department of Transportation
© 2017
SHEET 1 OF 1

FED. RD. DIV. NO.	FEDERAL AID PROJECT NO.		SHEET NO.
6	HP X597(1)		RTWL 009
STATE	STATE DIST. NO.	COUNTY	
TEXAS	CRP	NUECES	
CONT.	SECT	JOB	HIGHWAY NO.
0101	06	095	US181

PROJECT
US 181 HARBOR BRIDGE

Checked by: Date:
Back-Checked by: Date:
Corrected by: Date:
Verified by: Date:

REVIEW PHASE
☐ Detail Check ☐ Internal Review ☐ Design Review ☐ TxDOT
☐ Drawing ☐ Report ☐ Other:
Prepared By: Date:
☐ Drawing Checked Against Calculations ☐ Calculations Check Confirmed

Plotted: 4/17/2017 6:19:18 PM
Pen Table: HBR_RTWL.tbl
Design File: pw:\\stantec-sc-pw.bentley.com:stantec-sc-pw\Documents\01 Projects\HBR\Build Work\Design\07-Walls\07.01-Sheets\HBR_RET_SNW206_DT01.dgn

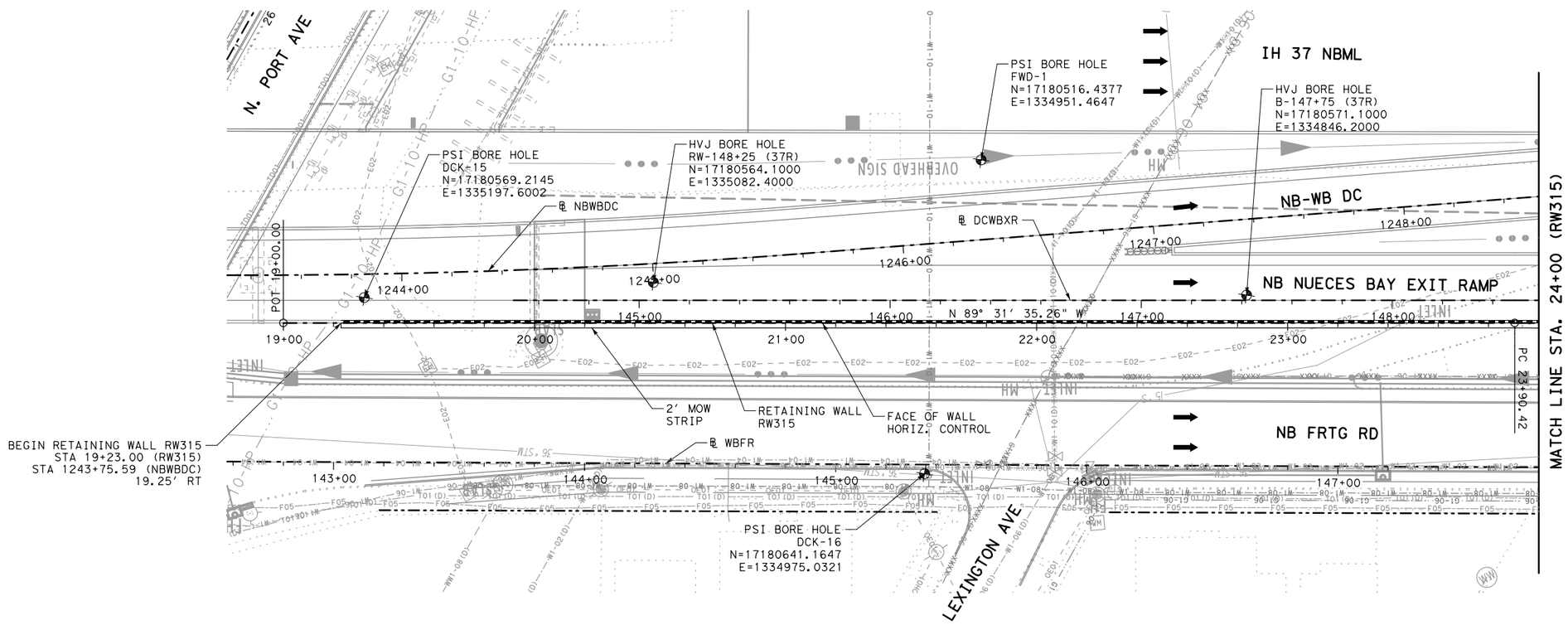

LEGEND

- PROPOSED TRAFFIC
- PROPOSED RETAINING WALL
- RWXXX-1 HORIZONTAL CURVE
- BORE LOCATION
- TEMPORARY SPL SHORING

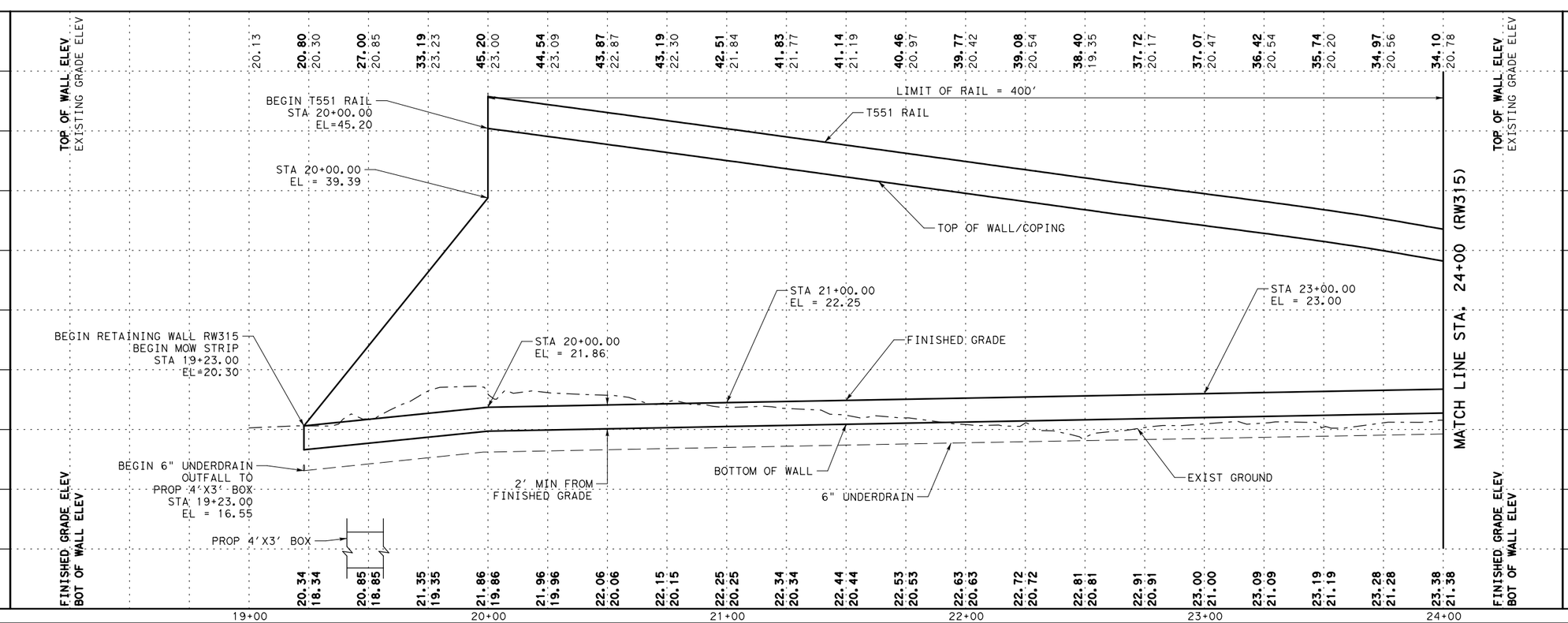

PROJECT
US 181 HARBOR BRIDGE

Checked by: Date:
Back-Checked by: Date:
Corrected by: Date:
Verified by: Date:

☐ Detail Check ☐ Internal Review ☐ Design Review ☐ TxDOT
☐ Drawing ☐ Report ☐ Other:
Prepared By: Date:
☐ Drawing Checked Against Calculations ☐ Calculations Check Confirmed
REVIEW PHASE

Plotted: 4/17/2017 6:19:32 PM
Pen Table: HBR_RTWL.tbl
Design File: pw:\\stantec-sc-pw.bentley.com:stantec-sc-pw\Documents\01 Projects\HBR\Build Work\Design\07-Walls\07.01-Sheets\HBR_RET_RW315.PP01

NO.	REVISIONS	BY	DATE

PRELIMINARY
FOR REVIEW ONLY
THESE DOCUMENTS ARE PRELIMINARY AND SUBJECT TO CHANGE. THEY ARE NOT INTENDED FOR CONSTRUCTION OR BIDDING. THEY WERE PREPARED BY, OR UNDER THE SUPERVISION OF:
Engineer: JEFFREY E. WESANEN
P.E. No.: 117522
Date: 4/17/2017

ADVANCED STATUS

NOT FOR CONSTRUCTION

US 181 HARBOR BRIDGE

RETAINING WALL LAYOUT RW315 (PACKAGE 5.0.01)

SCALE: 1"=50′ H
1"=10′ V

FLATIRON/DRAGADOS LLC

Stantec
Engineered by Stantec Consulting Services Inc.
Texas Registered Engineering Firm F-6324

Texas Department of Transportation
© 2017
SHEET 1 OF 2

FED. RD. DIV. NO.	FEDERAL AID PROJECT NO.		SHEET NO.
6	HP X597(1)		RTWL 010
STATE	STATE DIST. NO.	COUNTY	
TEXAS	CRP	NUECES	
CONT.	SECT	JOB	HIGHWAY NO.
0101	06	095	US181

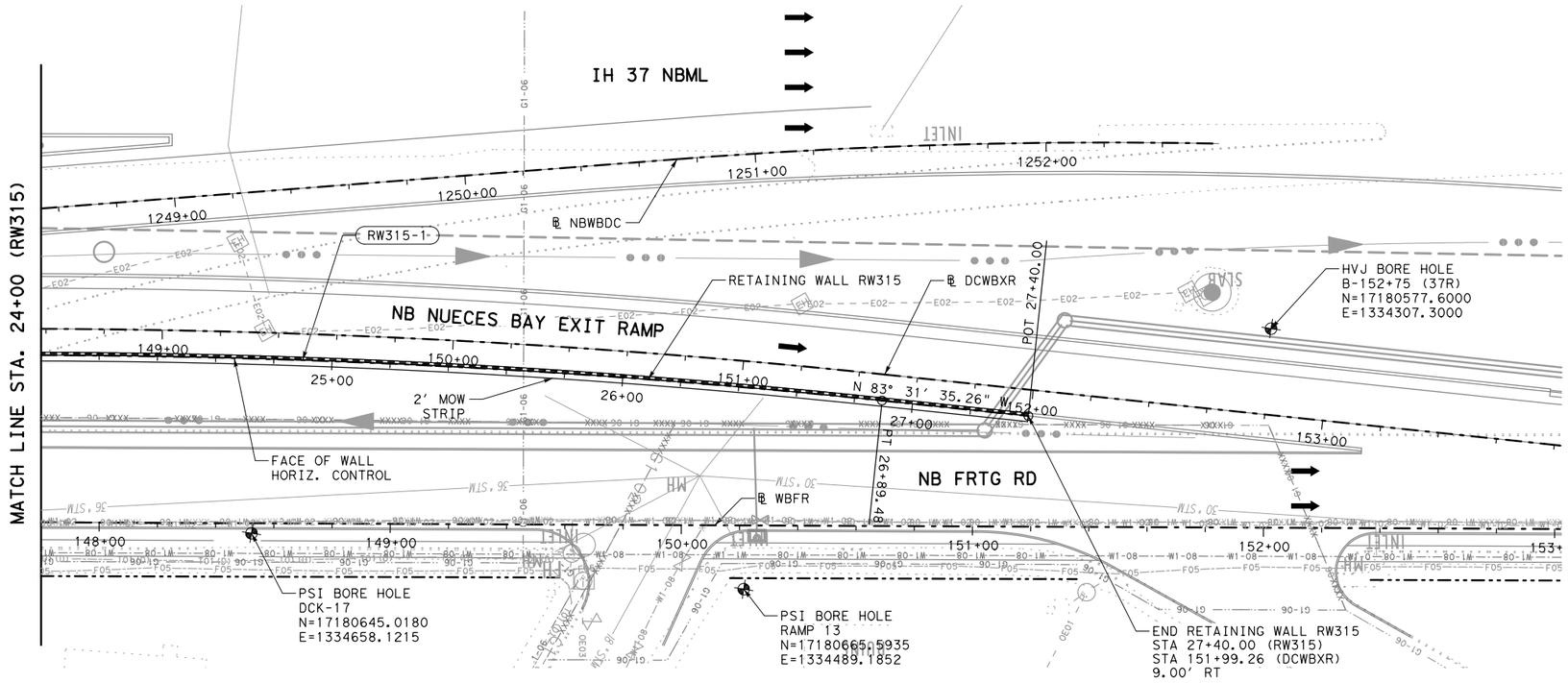

LEGEND

- PROPOSED TRAFFIC
- PROPOSED RETAINING WALL
- (RWXXX-1) HORIZONTAL CURVE
- BORE LOCATION
- TEMPORARY SPL SHORING

(RW315-1)

P.I. STA 25+40.08
Δ = 6° 00' 00.00" (RT)
T = 149.67
L = 299.06
R = 2855.79
P.C. STA 23+90.42
P.T. STA 26+89.48
TANGENT BRG @ PC = N 89° 31' 35.26" W
TANGENT BRG @ PT = N 83° 31' 35.26" W

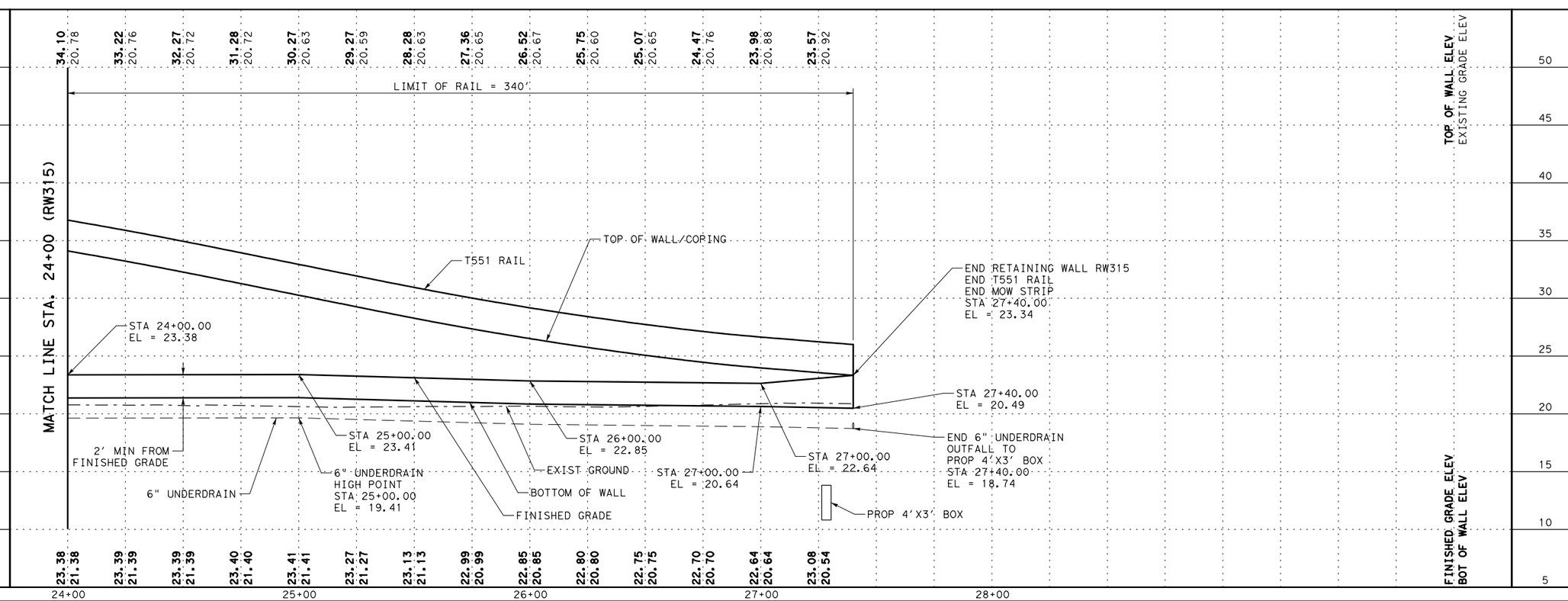

NO.	REVISIONS	BY	DATE

PRELIMINARY
FOR REVIEW ONLY
THESE DOCUMENTS ARE PRELIMINARY AND SUBJECT TO CHANGE. THEY ARE NOT INTENDED FOR CONSTRUCTION OR BIDDING. THEY WERE PREPARED BY, OR UNDER THE SUPERVISION OF:
Engineer: JEFFREY E. WESANEN
P.E. No.: 117522
Date: 4/17/2017

ADVANCED STATUS

NOT FOR CONSTRUCTION

US 181 HARBOR BRIDGE

RETAINING WALL LAYOUT RW315 (PACKAGE 5.0.01)

SCALE: 1"=50' H
1"=10' V

FLATIRON/DRAGADOS LLC

Stantec
Engineered by Stantec Consulting Services Inc.
Texas Registered Engineering Firm F-6324

Texas Department of Transportation
© 2017

SHEET 2 OF 2

FED. RD. DIV. NO.	FEDERAL AID PROJECT NO.		SHEET NO.
6	HP X597(1)		RTWL 011
STATE	STATE DIST. NO.	COUNTY	
TEXAS	CRP	NUECES	
CONT.	SECT	JOB	HIGHWAY NO.
0101	06	095	US181

PROJECT
US 181 HARBOR BRIDGE

Checked by: Date:
Back-Checked by: Date:
Corrected by: Date:
Verified by: Date:

REVIEW PHASE
☐ Detail Check ☐ Internal Review ☐ Design Review ☐ TxDOT
☐ Drawing ☐ Report ☐ Other:
Prepared By: Date:
☐ Drawing Checked Against Calculations ☐ Calculations Check Confirmed

Plotted: 4/17/2017 6:19:44 PM
Pen Table: HBR_RTWL.tbl
Design File: pw:\\stantec-sc-pw.bentley.com:stantec-sc-pw\Documents\01 Projects\HBR\Build Work\Design\07-Walls\07.01-Sheets\HBR_RET_RW315_PP02

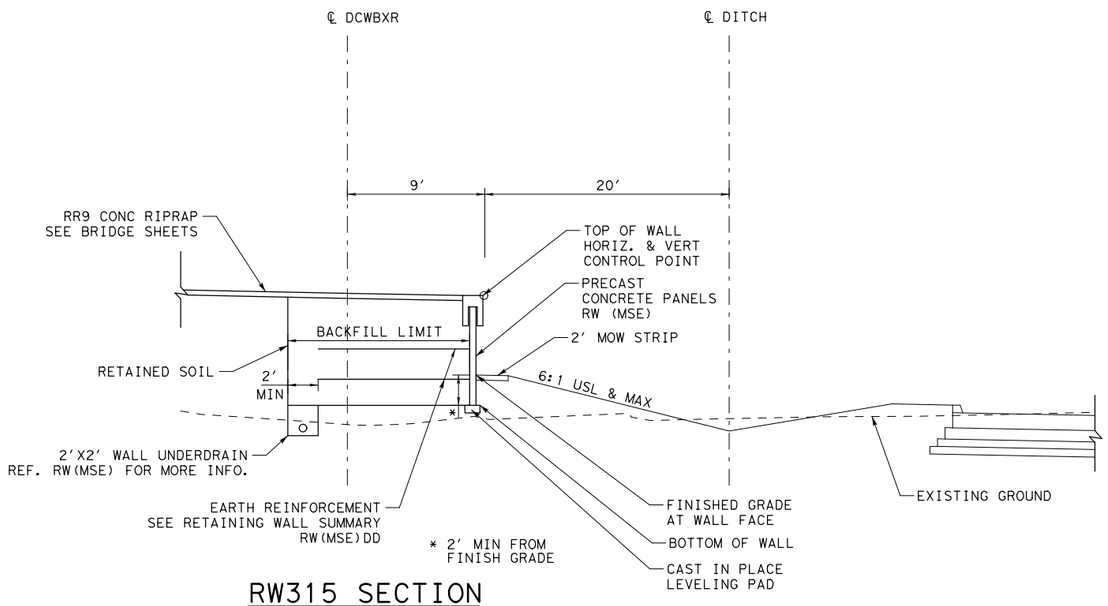

RW315 SECTION

STA 19+23.00 TO STA 20+00.00

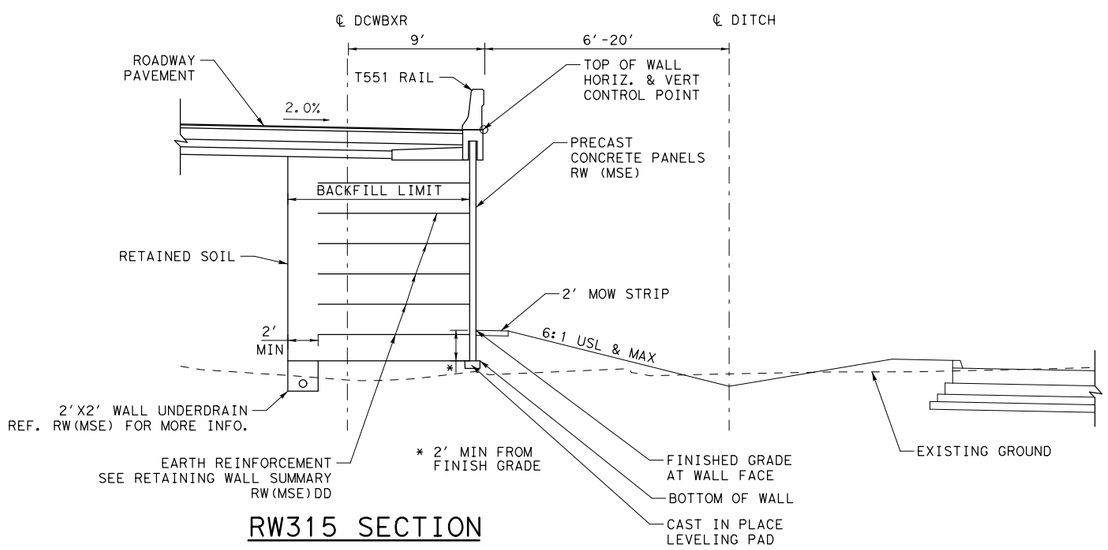

RW315 SECTION

STA 20+00.00 TO STA 27+40.00

NOTES:

1. SEE ROADWAY, BRIDGE, DRAINAGE, LIGHTING, AND BORING LOG SHEETS FOR ADDITIONAL INFORMATION.
2. REFER TO APPROVED AESTHETICS PLAN FOR AESTHETIC TREATMENT, LAYOUT, AND SURFACE FINISHES FOR WALL PANELS, COPING, RAIL, AND RIPRAP.
3. REFER TO TXDOT STANDARD RW(MSE), RW(TRF), AND RW(MSE)DD FOR ADDITIONAL INFORMATION. EMBANKMENT EARTH REINFORCEMENTS SHALL HAVE A MINIMUM LENGTH EQUAL TO OR GREATER THAN THE REQUIREMENTS SHOWN IN RW(MSE)DD.
4. WALL MANUFACTURER MAY ADJUST AND SHALL ACCOMMODATE ANY INLETS POSITIONED WITHIN THE REINFORCING ZONE OF THE MSE WALL. ADJUSTMENTS SHALL BE SHOWN IN THE SHOP DRAWINGS.
5. PROVIDE POSITIVE DRAINAGE DURING CONSTRUCTION AND POST CONSTRUCTION PERIOD.
6. SQUARE FOOT SURFACE AREA OF RETAINING WALL IS MEASURED FROM TOP OF WALL TO BOTTOM OF WALL UNLESS NOTED OTHERWISE.
7. THE UTILITY INFORMATION SHOWN IS NOT GUARANTEED TO BE ACCURATE OR ALL INCLUSIVE. CONTRACTOR SHALL VERIFY THE LOCATIONS OF ALL UTILITIES PRIOR TO CONSTRUCTION. THE CONTRACTOR IS RESPONSIBLE FOR ALL DAMAGES TO UTILITIES CAUSED BY CONSTRUCTION OPERATIONS.
8. NO CONSTRUCTION SHALL BEGIN UNTIL ALL REFERENCED SHEETS ARE APPROVED FOR CONSTRUCTION.

RW315 ESTIMATED QUANTITES

ITEM	DESC	DESCRIPTION	QUANT.	UNITS
423	6001	RETAINING WALL (MSE)	10854	SF
432	6045	RIPRAP (MOW STRIP) (4IN)	20	CY
450	6014	RAIL (TY T551)	740	LF

NO.	REVISIONS	BY	DATE

PRELIMINARY
FOR REVIEW ONLY
THESE DOCUMENTS ARE PRELIMINARY AND SUBJECT TO CHANGE. THEY ARE NOT INTENDED FOR CONSTRUCTION OR BIDDING. THEY WERE PREPARED BY, OR UNDER THE SUPERVISION OF:
Engineer: JEFFREY E. WESANEN
P.E. No.: 117522
Date: 4/17/2017

ADVANCED STATUS

NOT FOR CONSTRUCTION

US 181 HARBOR BRIDGE

RETAINING WALL SECTION & DETAILS RW315 (PACKAGE 5.0.01)

SCALE: 1"=10′

FLATIRON/DRAGADOS LLC

Stantec
Engineered by Stantec Consulting Services Inc.
Texas Registered Engineering Firm F-6324

Texas Department of Transportation
© 2017
SHEET 1 OF 1

FED. RD. DIV. NO.	FEDERAL AID PROJECT NO.		SHEET NO.
6	HP X597(1)		RTWL 012
STATE	STATE DIST. NO.	COUNTY	
TEXAS	CRP	NUECES	
CONT.	SECT	JOB	HIGHWAY NO.
0101	06	095	US181

PROJECT
US 181 HARBOR BRIDGE

Checked by: Date:
Back-Checked by: Date:
Corrected by: Date:
Verified by: Date:

☐ Detail Check ☐ Internal Review ☐ Design Review ☐ TxDOT
☐ Drawing ☐ Report ☐ Other:
Prepared By: Date:
☐ Drawing Checked Against Calculations ☐ Calculations Check Confirmed
REVIEW PHASE

Plotted: 4/17/2017 6:19:51 PM
Pen Table: HBR_RTWL.tbl
Design File: pw:\\stantec-sc-pw.bentley.com:stantec-sc-pw\Documents\01 Projects\HBR\Build Work\Design\07-Walls\07.01-Sheets\HBR_RET_RW315_DT01

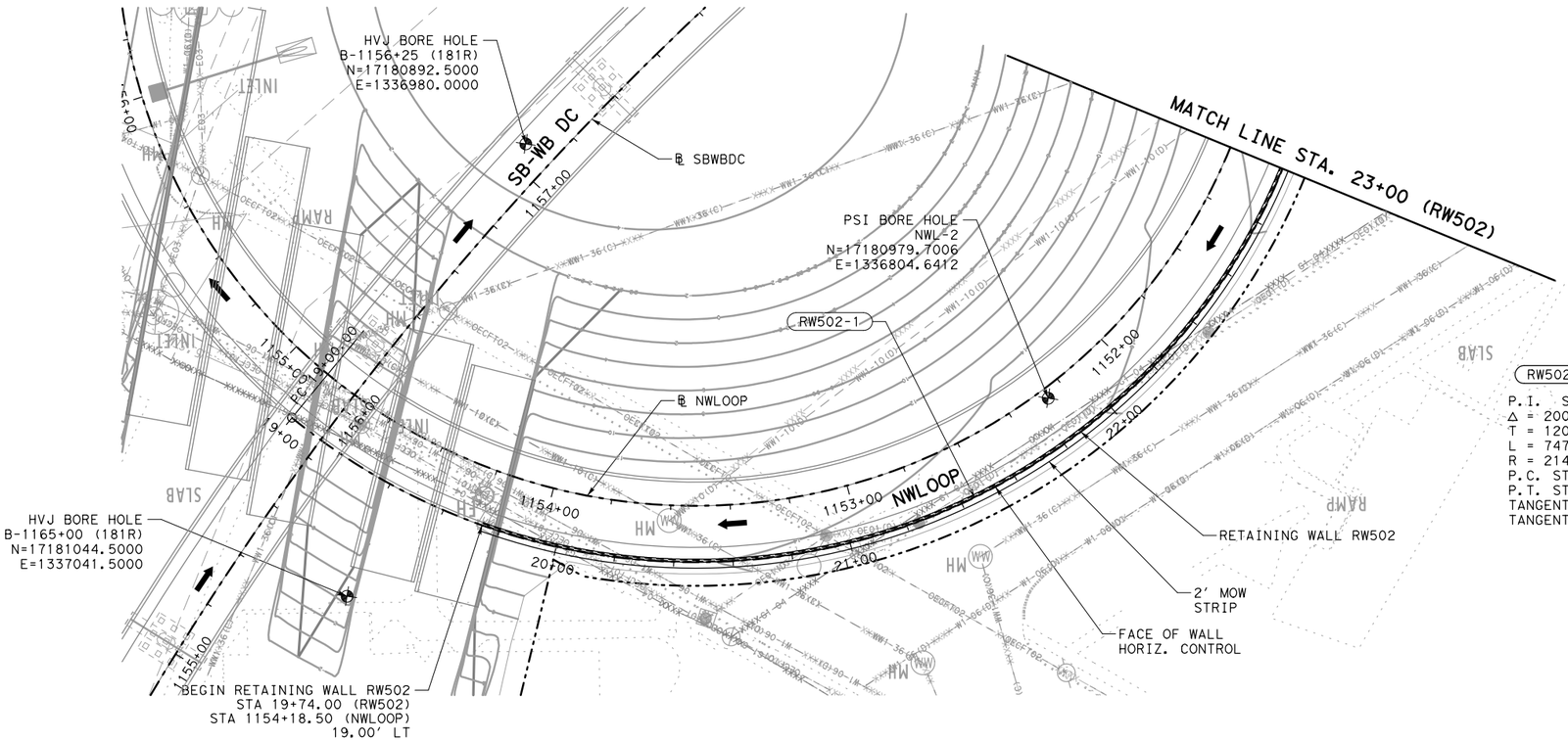

RW502-1

P.I. STA 31+08.84
Δ = 200° 04' 41.01" (LT)
T = 1208.84
L = 747.29
R = 214.00
P.C. STA 19+00.00
P.T. STA 26+47.29
TANGENT BRG @ PC = N 50° 05' 37.40" W
TANGENT BRG @ PT = S 70° 10' 18.42" E

LEGEND

- PROPOSED TRAFFIC
- PROPOSED RETAINING WALL
- RWXXX-1 HORIZONTAL CURVE
- BORE LOCATION
- TEMPORARY SPL SHORING

NOTE:

CONTRACTOR SHALL COORDINATE FINISHED GRADE AT FACE OF WALL WITH ADJACENT GRADING AT PARK.

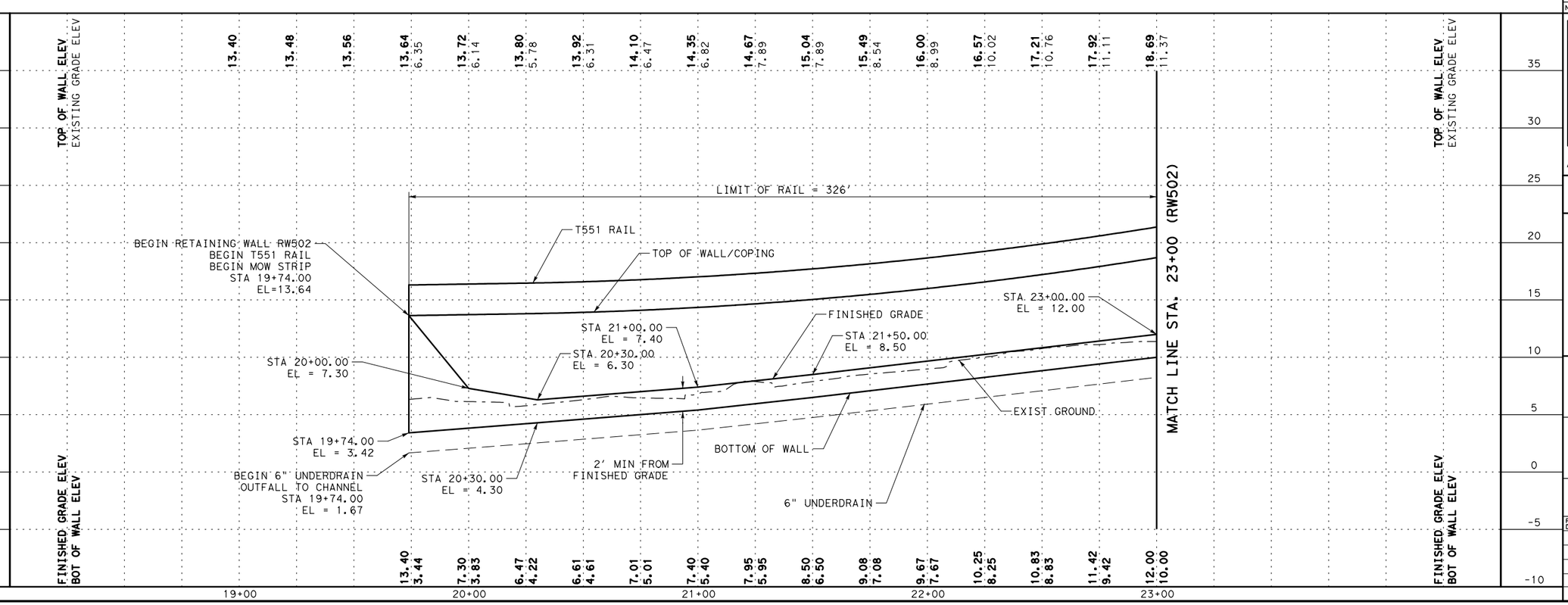

NO.	REVISIONS	BY	DATE

PRELIMINARY
FOR REVIEW ONLY
THESE DOCUMENTS ARE PRELIMINARY AND SUBJECT TO CHANGE. THEY ARE NOT INTENDED FOR CONSTRUCTION OR BIDDING. THEY WERE PREPARED BY, OR UNDER THE SUPERVISION OF:
Engineer: JEFFREY E. WESANEN
P.E. No.: 117522
Date: 4/14/2017

ADVANCED STATUS

NOT FOR CONSTRUCTION

US 181 HARBOR BRIDGE

RETAINING WALL LAYOUT RW502 (PACKAGE 7.0.01)

SCALE: 1"=50' H
1"=10' V

FLATIRON/DRAGADOS LLC

Stantec
Engineered by Stantec Consulting Services Inc.
Texas Registered Engineering Firm F-6324

Texas Department of Transportation
© 2017

SHEET 1 OF 2

FED. RD. DIV. NO.	FEDERAL AID PROJECT NO.		SHEET NO.
6	HP X597(1)		RTWL 001
STATE	STATE DIST. NO.	COUNTY	
TEXAS	CRP	NUECES	
CONT.	SECT	JOB	HIGHWAY NO.
0101	06	095	US181

PROJECT
US 181 HARBOR BRIDGE

Checked by: Date:
Back-Checked by: Date:
Corrected by: Date:
Verified by: Date:

☐ Detail Check ☐ Internal Review ☐ Design Review ☐ TxDOT
☐ Drawing ☐ Report ☐ Other:
Prepared By: Date:
☐ Drawing Checked Against Calculations ☐ Calculations Check Confirmed

REVIEW PHASE
60% SUBMITTAL CHECK PRINT

Plotted: 4/14/2017 9:14:40 AM
Pen Table: HBR_RTWL.tbl
Design File: pw:\\stantec-sc-pw.bentley.com:stantec-sc-pw\Documents\01 Projects\HBR\Build Work\Design\07-Walls\07.01-Sheets\HBR_RET_RW502_PP01

RW502-1

P.I. STA 31+08.84
Δ = 200° 04′ 41.01" (LT)
T = 1208.84
L = 747.29
R = 214.00
P.C. STA 19+00.00
P.T. STA 26+47.29
TANGENT BRG @ PC = N 50° 05′ 37.40" W
TANGENT BRG @ PT = S 70° 10′ 18.42" E

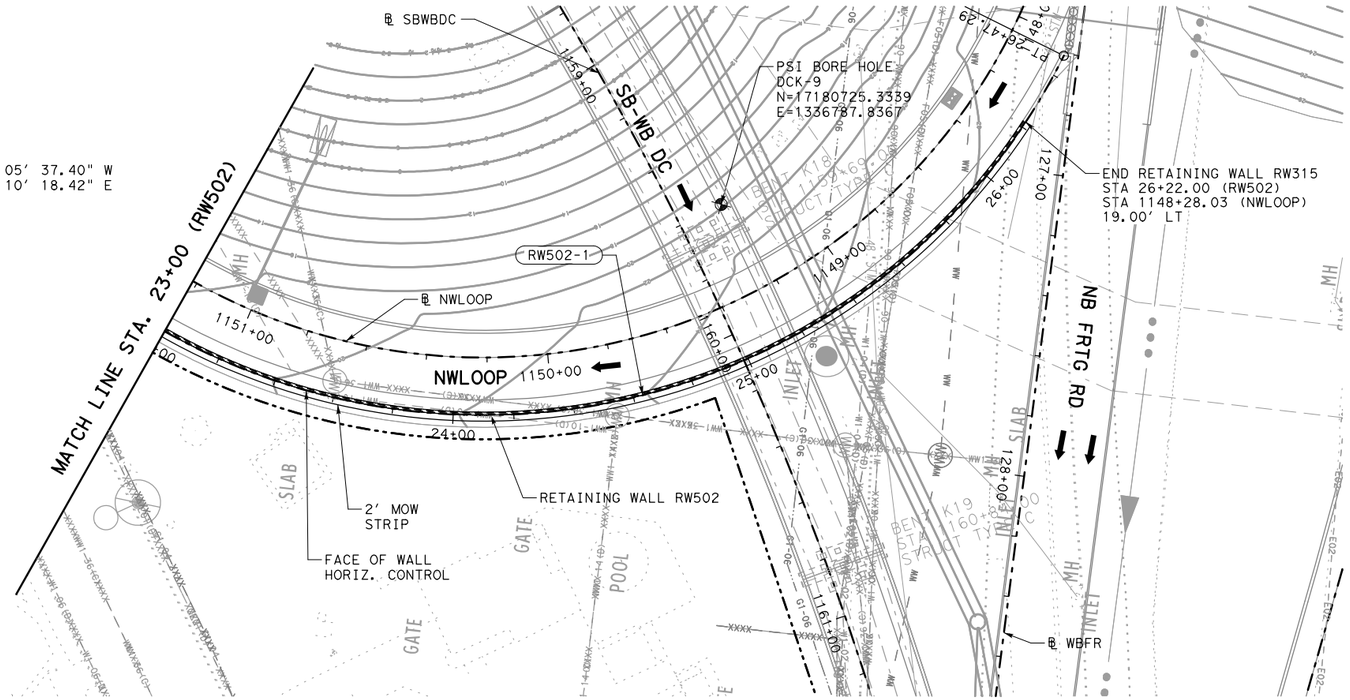

LEGEND

- PROPOSED TRAFFIC
- PROPOSED RETAINING WALL
- RWXXX-1 HORIZONTAL CURVE
- BORE LOCATION
- TEMPORARY SPL SHORING

NOTE:

CONTRACTOR SHALL COORDINATE FINISHED GRADE AT FACE OF WALL WITH ADJACENT GRADING AT PARK.

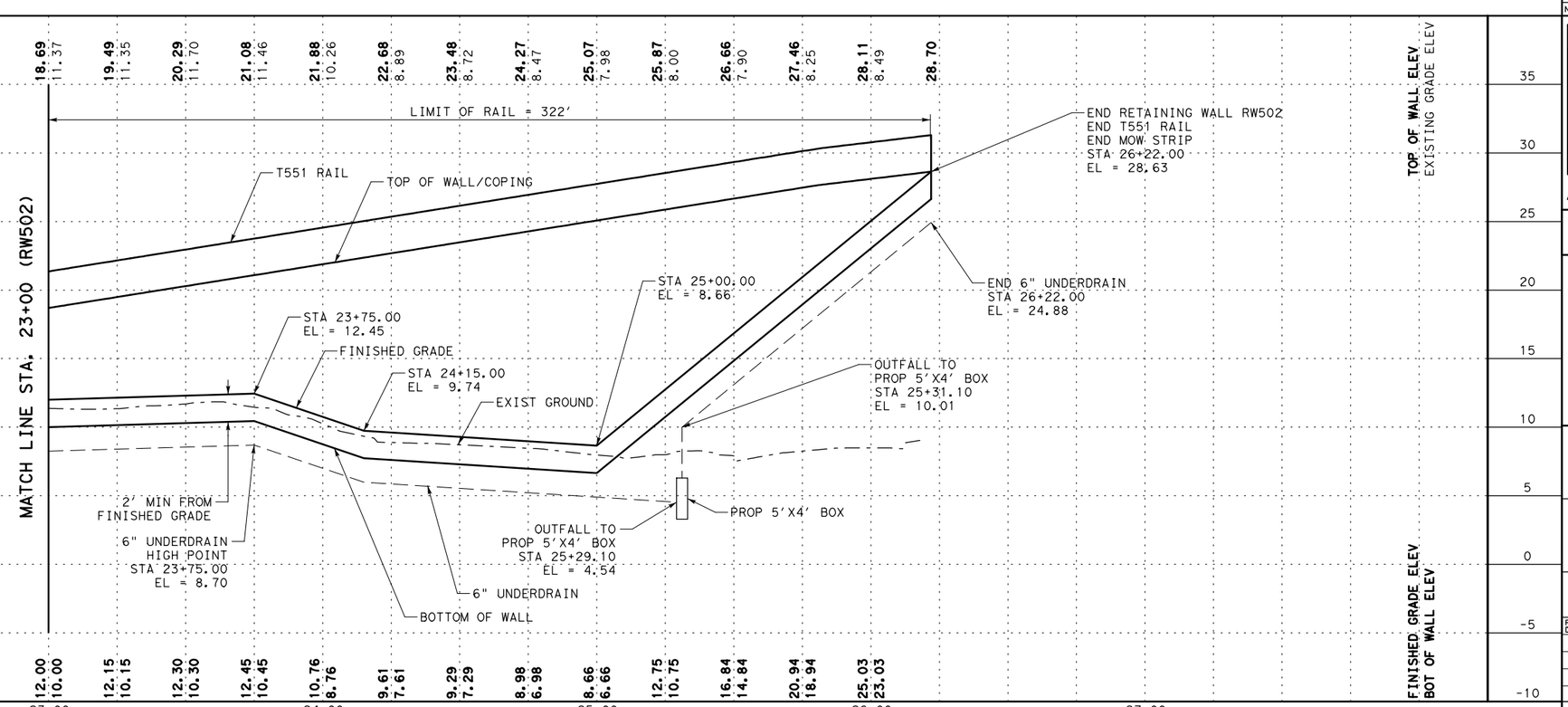

NO.	REVISIONS	BY	DATE

PRELIMINARY
FOR REVIEW ONLY
THESE DOCUMENTS ARE PRELIMINARY AND SUBJECT TO CHANGE. THEY ARE NOT INTENDED FOR CONSTRUCTION OR BIDDING. THEY WERE PREPARED BY, OR UNDER THE SUPERVISION OF:
Engineer: JEFFREY E. WESANEN
P.E. No.: 117522
Date: 4/14/2017

ADVANCED STATUS

NOT FOR CONSTRUCTION

US 181 HARBOR BRIDGE

RETAINING WALL LAYOUT RW502 (PACKAGE 7.0.01)

SCALE: 1"=50′ H
1"=10′ V

FLATIRON/DRAGADOS LLC

Stantec
Engineered by Stantec Consulting Services Inc.
Texas Registered Engineering Firm F-6324

Texas Department of Transportation
© 2017

SHEET 2 OF 2

FED. RD. DIV. NO.	FEDERAL AID PROJECT NO.		SHEET NO.
6	HP X597(1)		RTWL 002
STATE	STATE DIST. NO.	COUNTY	
TEXAS	CRP	NUECES	
CONT.	SECT	JOB	HIGHWAY NO.
0101	06	095	US181

PROJECT
US 181 HARBOR BRIDGE

Checked by: Date:
Back-Checked by: Date:
Corrected by: Date:
Verified by: Date:

☐ Detail Check ☐ Internal Review ☐ Design Review ☐ TxDOT
☐ Drawing ☐ Report ☐ Other:
Prepared By: Date:
☐ Drawing Checked Against Calculations ☐ Calculations Check Confirmed

REVIEW PHASE
60% SUBMITTAL CHECK PRINT

Plotted: 4/14/2017 9:14:46 AM
Pen Table: HBR_RTWL.tbl
Design File: pw:\\stantec-sc-pw.bentley.com:stantec-sc-pw\Documents\01 Projects\HBR\Build Work\Design\07-Walls\07.01-Sheets\HBR_RET_RW502_PP02

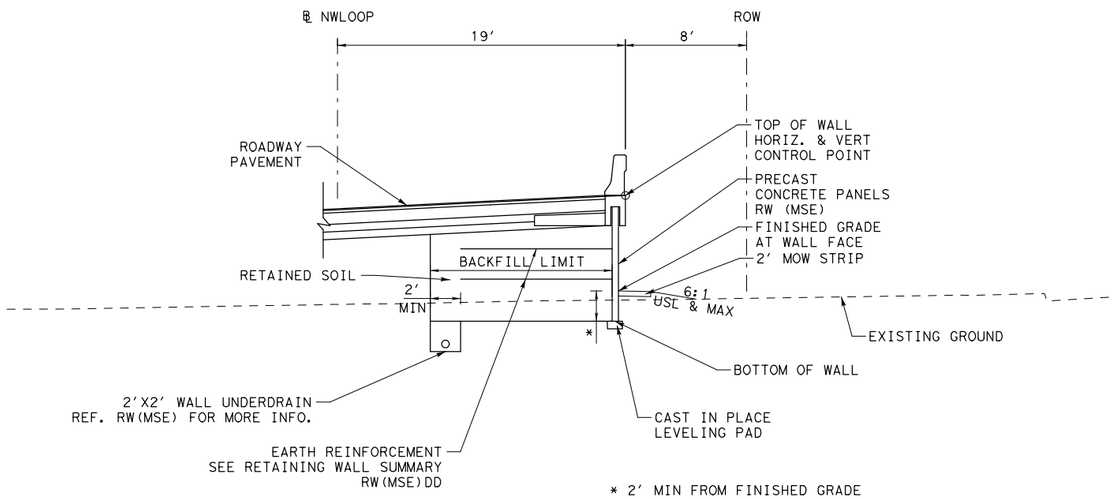

RW502 SECTION

STA 19+74.00 TO STA 24+85.28

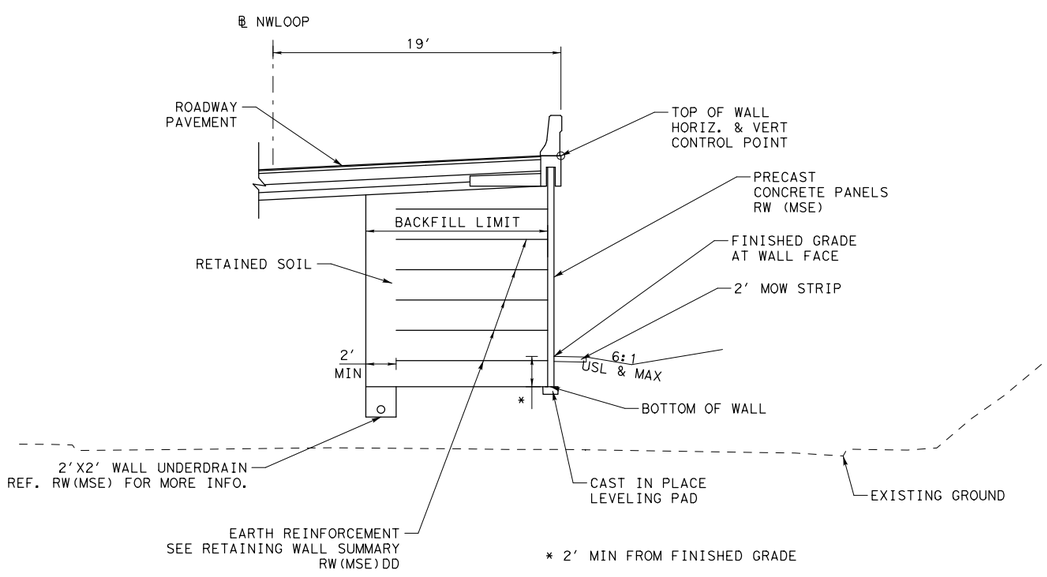

RW502 SECTION

STA 24+85.28 TO STA 26+22.00

NOTES:

1. SEE ROADWAY, BRIDGE, DRAINAGE, LIGHTING, AND BORING LOG SHEETS FOR ADDITIONAL INFORMATION.
2. REFER TO APPROVED AESTHETICS PLAN FOR AESTHETIC TREATMENT, LAYOUT, AND SURFACE FINISHES FOR WALL PANELS, COPING, RAIL, AND RIPRAP.
3. REFER TO TXDOT STANDARD RW(MSE), RW(TRF), AND RW(MSE)DD FOR ADDITIONAL INFORMATION. EMBANKMENT EARTH REINFORCEMENTS SHALL HAVE A MINIMUM LENGTH EQUAL TO OR GREATER THAN THE REQUIREMENTS SHOWN IN RW(MSE)DD.
4. WALL MANUFACTURER MAY ADJUST AND SHALL ACCOMMODATE ANY INLETS POSITIONED WITHIN THE REINFORCING ZONE OF THE MSE WALL. ADJUSTMENTS SHALL BE SHOWN IN THE SHOP DRAWINGS.
5. PROVIDE POSITIVE DRAINAGE DURING CONSTRUCTION AND POST CONSTRUCTION PERIOD.
6. SQUARE FOOT SURFACE AREA OF RETAINING WALL IS MEASURED FROM TOP OF WALL TO BOTTOM OF WALL UNLESS NOTED OTHERWISE.
7. THE UTILITY INFORMATION SHOWN IS NOT GUARANTEED TO BE ACCURATE OR ALL INCLUSIVE. CONTRACTOR SHALL VERIFY THE LOCATIONS OF ALL UTILITIES PRIOR TO CONSTRUCTION. THE CONTRACTOR IS RESPONSIBLE FOR ALL DAMAGES TO UTILITIES CAUSED BY CONSTRUCTION OPERATIONS.
8. NO CONSTRUCTION SHALL BEGIN UNTIL ALL REFERENCED SHEETS ARE APPROVED FOR CONSTRUCTION.

RW502 ESTIMATED QUANTITES

ITEM	DESC	DESCRIPTION	QUANT.	UNITS
423	6001	RETAINING WALL (MSE)	6788	SF
432	6045	RIPRAP (MOW STRIP) (4IN)	16	CY
450	6014	RAIL (TY T551)	648	LF

NO.	REVISIONS	BY	DATE

PRELIMINARY
FOR REVIEW ONLY
THESE DOCUMENTS ARE PRELIMINARY AND SUBJECT TO CHANGE. THEY ARE NOT INTENDED FOR CONSTRUCTION OR BIDDING. THEY WERE PREPARED BY, OR UNDER THE SUPERVISION OF:
Engineer: JEFFREY E. WESANEN
P.E. No.: 117522
Date: 4/14/2017

ADVANCED STATUS

NOT FOR CONSTRUCTION

US 181 HARBOR BRIDGE

RETAINING WALL SECTION & DETAILS RW502 (PACKAGE 7.0.01)

SCALE: 1"=10′

FLATIRON/DRAGADOS LLC

Stantec
Engineered by Stantec Consulting Services Inc.
Texas Registered Engineering Firm F-6324

Texas Department of Transportation
© 2017

SHEET 1 OF 1

FED. RD. DIV. NO.	FEDERAL AID PROJECT NO.		SHEET NO.
6	HP X597(1)		RTWL 003
STATE	STATE DIST. NO.	COUNTY	
TEXAS	CRP	NUECES	
CONT.	SECT	JOB	HIGHWAY NO.
0101	06	095	US181

PROJECT
US 181 HARBOR BRIDGE

Checked by: Date:
Back-Checked by: Date:
Corrected by: Date:
Verified by: Date:

☐ Detail Check ☐ Internal Review ☐ Design Review ☐ TxDOT
☐ Drawing ☐ Report ☐ Other:
Prepared By: Date:
☐ Drawing Checked Against Calculations ☐ Calculations Check Confirmed

REVIEW PHASE
60% SUBMITTAL CHECK PRINT

Plotted: 4/14/2017 9:14:51 AM
Pen Table: HBR_RTWL.tbl
Design File: pw:\\stantec-sc-pw.bentley.com:stantec-sc-pw\Documents\01 Projects\HBR\Build Work\Design\07-Walls\07.01-Sheets\HBR_RET_RW502_DT01

SNW203-1

P.I. STA 23+40.17
Δ = 5° 39′ 40.38" (LT)
T = 190.17
L = 380.03
R = 3846.22
P.C. STA 21+50.00
P.T. STA 25+30.03
TANGENT BRG @ PC = S 5° 43′ 52.06" W
TANGENT BRG @ PT = S 0° 04′ 11.68" W

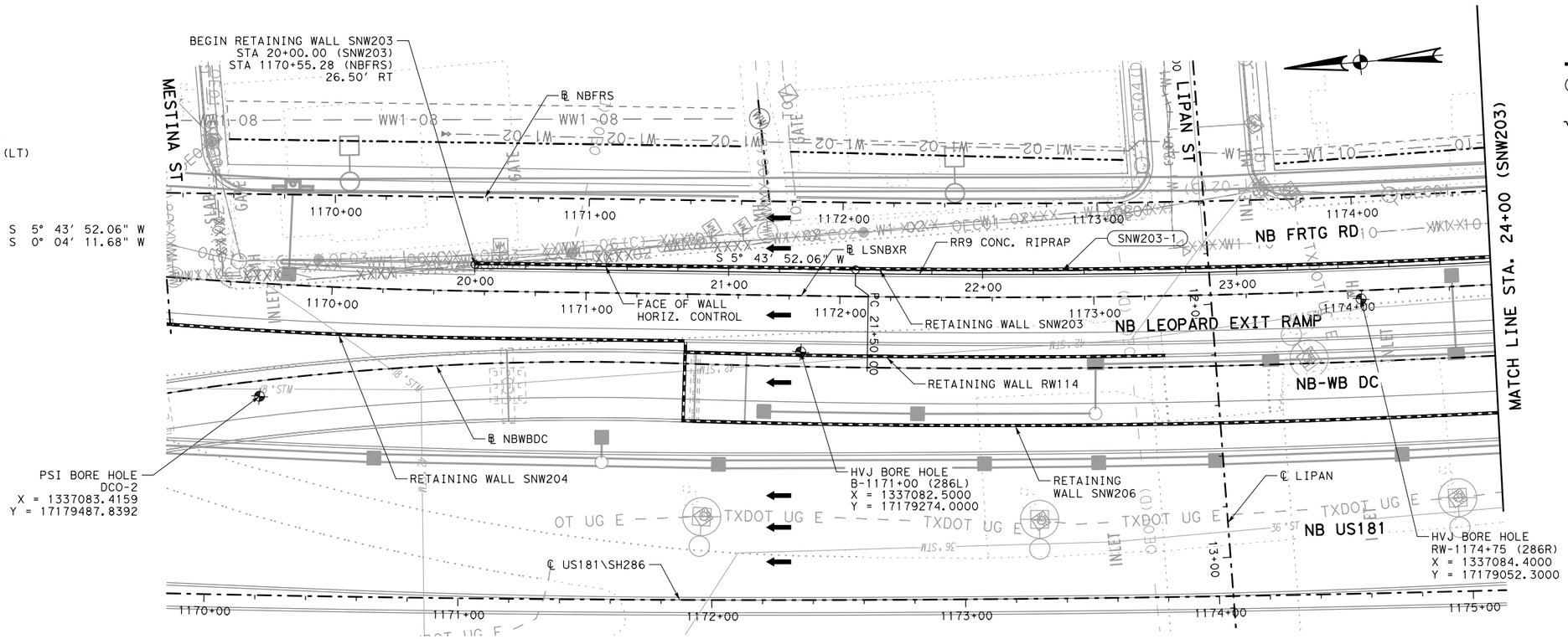

LEGEND

- PROPOSED TRAFFIC
- PROPOSED RETAINING WALL
- RWXXX-1 HORIZONTAL CURVE
- BORE LOCATION
- TEMPORARY SPL SHORING

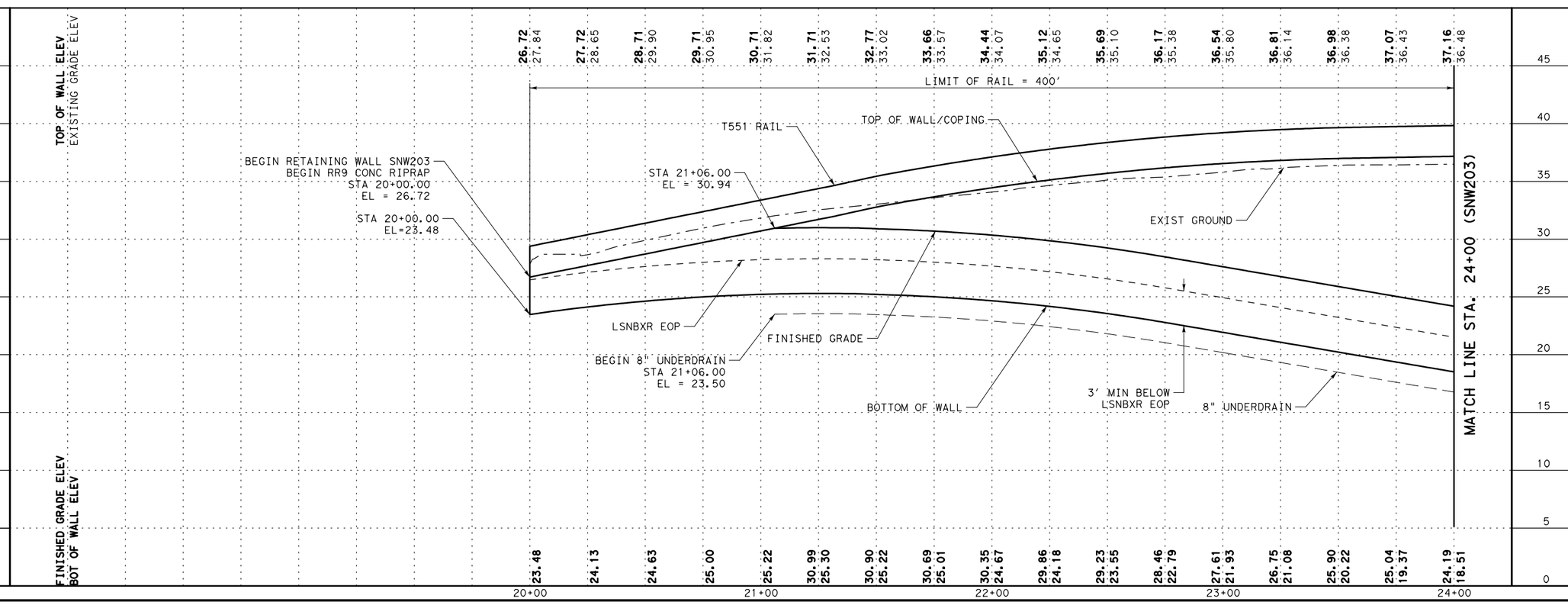

NO.	REVISIONS	BY	DATE

PRELIMINARY
FOR REVIEW ONLY
THESE DOCUMENTS ARE PRELIMINARY AND SUBJECT TO CHANGE. THEY ARE NOT INTENDED FOR CONSTRUCTION OR BIDDING. THEY WERE PREPARED BY, OR UNDER THE SUPERVISION OF:
Engineer: JEFFREY E. WESANEN
P.E. No.: 117522
Date: 3/17/2017

PREFINAL SUBMITTAL

NOT FOR CONSTRUCTION

US 181 HARBOR BRIDGE

RETAINING WALL LAYOUT SNW203 (PACKAGE 12.0.01)

SCALE: 1"=50′ H
1"=10′ V

FLATIRON/DRAGADOS LLC

Stantec
Engineered by Stantec Consulting Services Inc.
Texas Registered Engineering Firm F-6324

Texas Department of Transportation
© 2017
SHEET 1 OF 3

FED. RD. DIV. NO.	FEDERAL AID PROJECT NO.		SHEET NO.
6	HP X597(1)		RTWL 001
STATE	STATE DIST. NO.	COUNTY	
TEXAS	CRP	NUECES	
CONT.	SECT	JOB	HIGHWAY NO.
0101	06	095	US181

PROJECT
US 181 HARBOR BRIDGE

Checked by: Date:
Back-Checked by: Date:
Corrected by: Date:
Verified by: Date:

REVIEW PHASE
☐ Detail Check ☐ Internal Review ☐ Design Review ☐ TxDOT
☐ Drawing ☐ Report ☐ Other:
Prepared By: Date:
☐ Drawing Checked Against Calculations ☐ Calculations Check Confirmed

Plotted: 3/17/2017 5:53:49 PM
Pen Table: HBR_RTWL.tbl
Design File: pw:\\stantec-sc-pw.bentley.com:stantec-sc-pw\Documents\01 Projects\HBR\Build Work\Design\07-Walls\07.01-Sheets\HBR_RET_SNW203_PP01.dgn

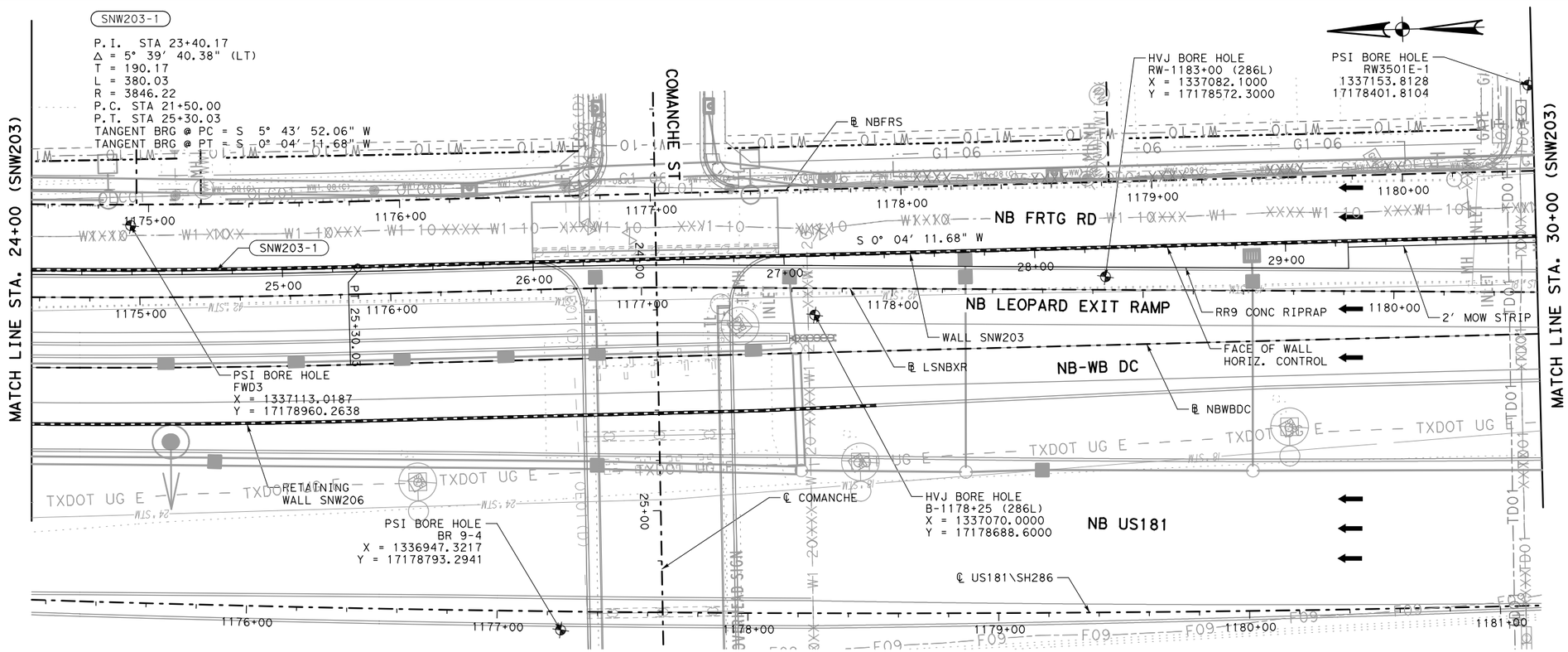

LEGEND

- PROPOSED TRAFFIC
- PROPOSED RETAINING WALL
- RWXXX-1 HORIZONTAL CURVE
- BORE LOCATION
- TEMPORARY SPL SHORING

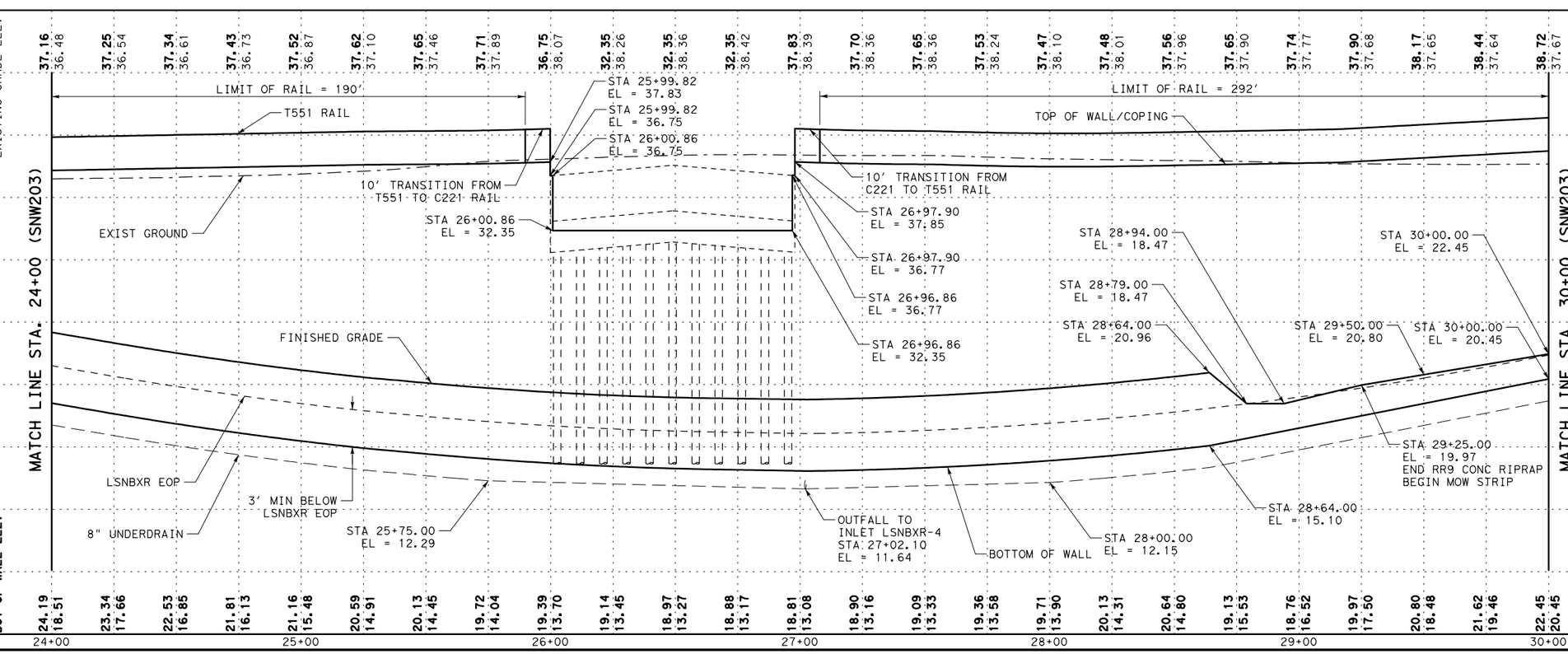

PROJECT
US 181 HARBOR BRIDGE

Checked by: Date:
Back-Checked by: Date:
Corrected by: Date:
Verified by: Date:

☐ Detail Check ☐ Internal Review ☐ Design Review ☐ TxDOT
☐ Drawing ☐ Report ☐ Other:
Prepared By: Date:
☐ Drawing Checked Against Calculations ☐ Calculations Check Confirmed

REVIEW PHASE

Plotted: 3/17/2017 5:53:57 PM
Pen Table: HBR_RTWL.tbl
Design File: pw:\\stantec-sc-pw.bentley.com:stantec-sc-pw\Documents\01 Projects\HBR\Build Work\Design\07-Walls\07.01-Sheets\HBR_RET_SNW203_PP02.dgn

NO.	REVISIONS	BY	DATE

PRELIMINARY
FOR REVIEW ONLY
THESE DOCUMENTS ARE PRELIMINARY AND SUBJECT TO CHANGE. THEY ARE NOT INTENDED FOR CONSTRUCTION OR BIDDING. THEY WERE PREPARED BY, OR UNDER THE SUPERVISION OF:
Engineer: JEFFREY E. WESANEN
P.E. No.: 117522
Date: 3/17/2017

PREFINAL SUBMITTAL

NOT FOR CONSTRUCTION

US 181 HARBOR BRIDGE

RETAINING WALL LAYOUT SNW203 (PACKAGE 12.0.01)

SCALE: 1"=50′ H
1"=10′ V

FLATIRON/DRAGADOS LLC

Stantec
Engineered by Stantec Consulting Services Inc.
Texas Registered Engineering Firm F-6324

Texas Department of Transportation
© 2017

SHEET 2 OF 3

FED. RD. DIV. NO.	FEDERAL AID PROJECT NO.		SHEET NO.
6	HP X597(1)		RTWL 002
STATE	STATE DIST. NO.	COUNTY	
TEXAS	CRP	NUECES	
CONT.	SECT	JOB	HIGHWAY NO.
0101	06	095	US181

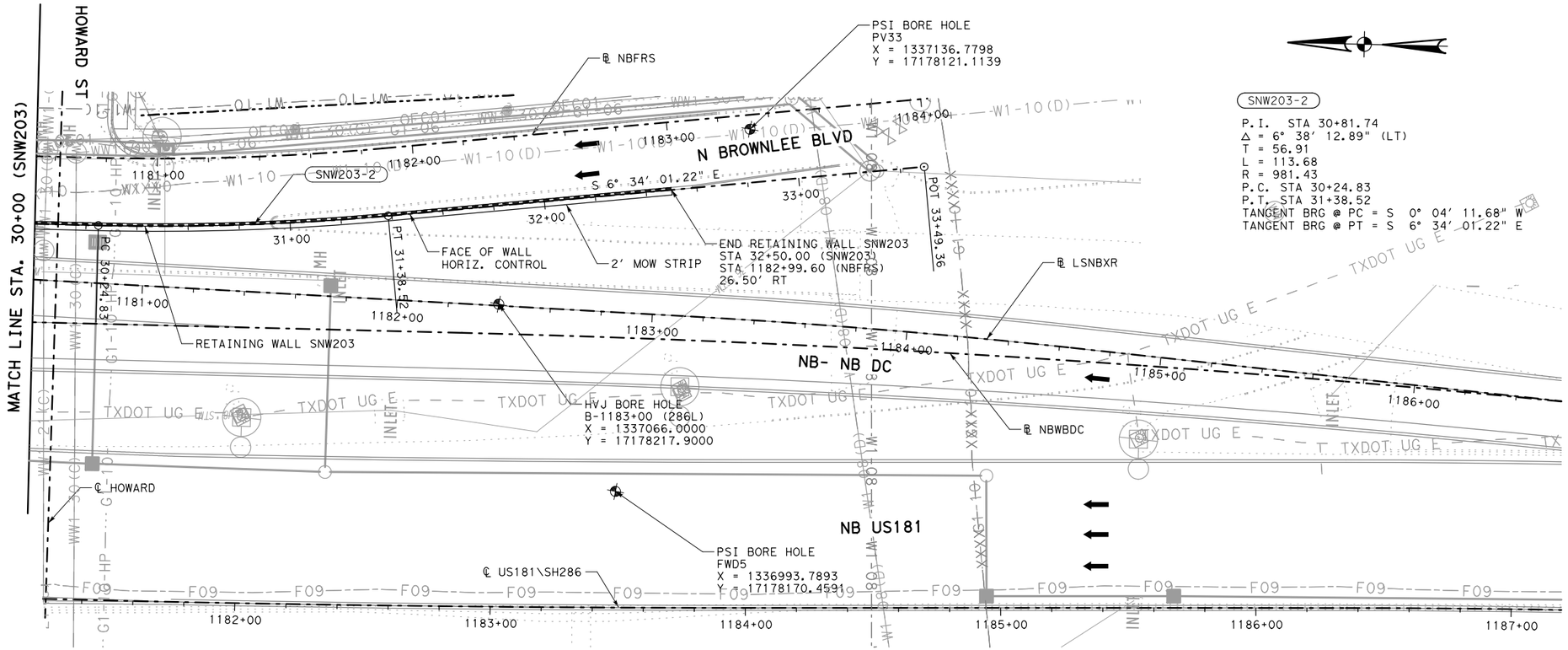

SNW203-2

P.I. STA 30+81.74
Δ = 6° 38' 12.89" (LT)
T = 56.91
L = 113.68
R = 981.43
P.C. STA 30+24.83
P.T. STA 31+38.52
TANGENT BRG @ PC = S 0° 04' 11.68" W
TANGENT BRG @ PT = S 6° 34' 01.22" E

LEGEND

- PROPOSED TRAFFIC
- PROPOSED RETAINING WALL
- RWXXX-1 HORIZONTAL CURVE
- BORE LOCATION
- TEMPORARY SPL SHORING

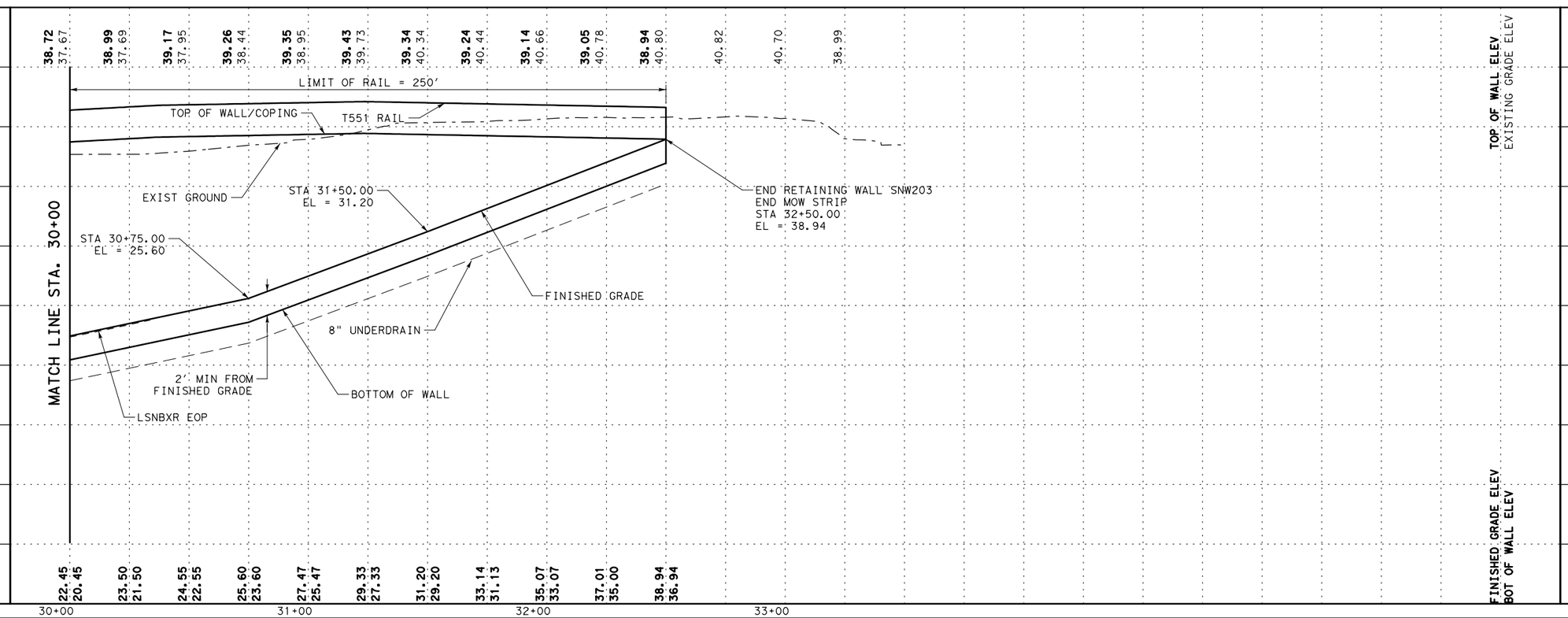

NO.	REVISIONS	BY	DATE

PRELIMINARY
FOR REVIEW ONLY
THESE DOCUMENTS ARE PRELIMINARY AND SUBJECT TO CHANGE. THEY ARE NOT INTENDED FOR CONSTRUCTION OR BIDDING. THEY WERE PREPARED BY, OR UNDER THE SUPERVISION OF:
Engineer: JEFFREY E. WESANEN
P.E. No.: 117522
Date: 3/17/2017

PREFINAL SUBMITTAL

NOT FOR CONSTRUCTION

US 181 HARBOR BRIDGE

RETAINING WALL LAYOUT SNW203 (PACKAGE 12.0.01)

SCALE: 1"=50' H
1"=10' V

FLATIRON/DRAGADOS LLC

Stantec
Engineered by Stantec Consulting Services Inc.
Texas Registered Engineering Firm F-6324

Texas Department of Transportation
© 2017

SHEET 3 OF 3

FED. RD. DIV. NO.	FEDERAL AID PROJECT NO.		SHEET NO.
6	HP X597(1)		RTWL 003
STATE	STATE DIST. NO.	COUNTY	
TEXAS	CRP	NUECES	
CONT.	SECT	JOB	HIGHWAY NO.
0101	06	095	US181

PROJECT
US 181 HARBOR BRIDGE

Checked by: Date:
Back-Checked by: Date:
Corrected by: Date:
Verified by: Date:

REVIEW PHASE
☐ Detail Check ☐ Internal Review ☐ Design Review ☐ TxDOT
☐ Drawing ☐ Report ☐ Other:
Prepared By: Date:
☐ Drawing Checked Against Calculations ☐ Calculations Check Confirmed

Plotted: 3/17/2017 5:54:09 PM
Pen Table: HBR_RTWL.tbl
Design File: pw:\\stantec-sc-pw.bentley.com:stantec-sc-pw\Documents\01 Projects\HBR\Build Work\Design\07-Walls\07.01-Sheets\HBR_RET_SNW203_PP03.dgn

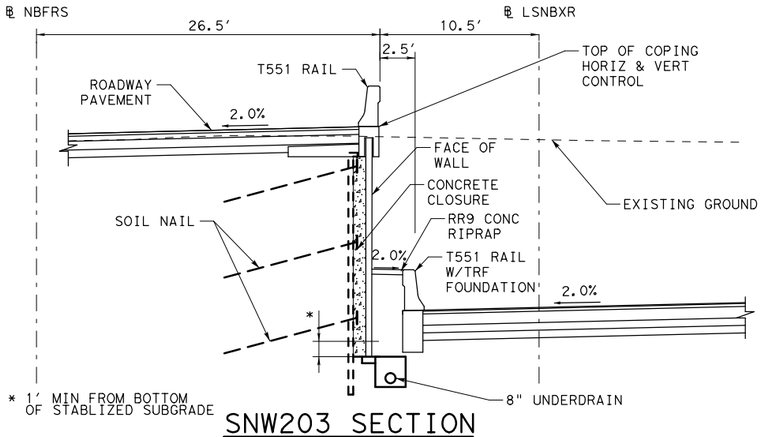

SNW203 SECTION

STA 20+00 TO 25+99.86

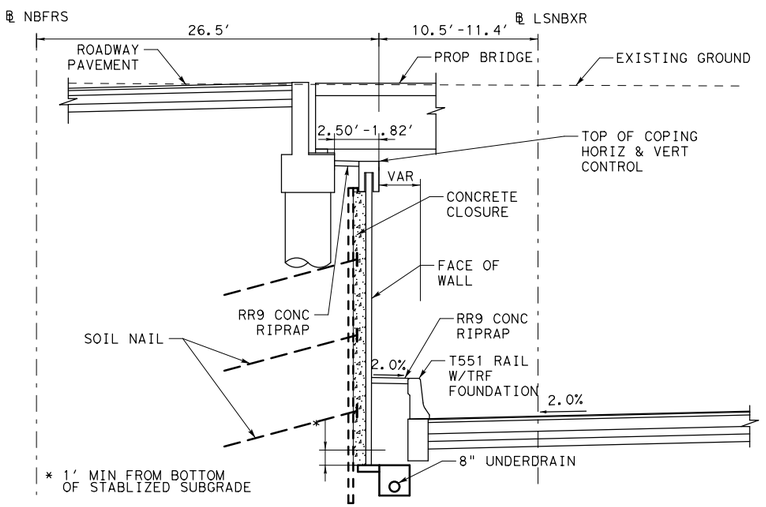

SNW203 SECTION

STA 25+99.86 TO STA 26+97.88

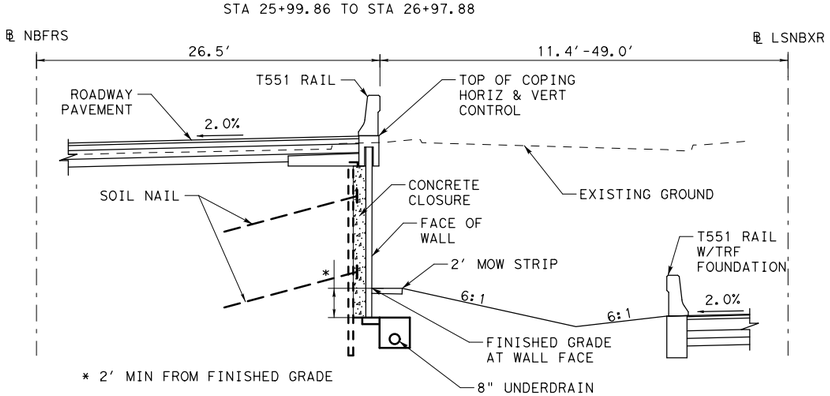

SNW203 SECTION

STA 26+97.88 TO STA 32+50.00

NOTES:

1. SEE ROADWAY, BRIDGE, DRAINAGE, LIGHTING, AND BORING LOG SHEETS FOR ADDITIONAL INFORMATION.
2. REFER TO APPROVED AESTHETICS PLAN FOR AESTHETIC TREATMENT, LAYOUT, AND SURFACE FINISHES FOR WALL PANELS, COPING, RAIL, AND RIPRAP.
3. REFER TO NAIL LAYOUTS AND DETAILS FOR ADDITIONAL INFORMATION AND NOTES REGARDING MATERIALS, MINIMUM NAIL SPACING AND LENGTHS, AND NAIL TESTING REQUIREMENTS.
4. ALL CONCRETE SHALL BE CLASS C UNLESS OTHERWISE NOTED.
5. ALL REINFORCING STEEL SHALL BE GRADE 60.
6. PNEUMATICALLY PLACED CONCRETE SHALL COMPLY WITH REQUIREMENTS ITEM 431 PNEUMATICALLY PLACED CONCRETE, CLASS II.
7. DRAINAGE SYSTEM SHALL CONSIST OF 2'-0" PANELS OF PREFABRICATED SOIL DRAINAGE MATS EMPTYING INTO 2" WEEPHOLES. FILTER FABRIC SHALL MEET THE REQUIREMENTS OF DMS-6200. PNEUMATICALLY PLACED CONCRETE SHALL BE PLACED OVER THE DRAINAGE MATS, WITH THE DRAINAGE MATS PLACED AGAINST THE SOIL.
8. WEEPHOLE COVERING SHALL BE ONE OF THE FOLLOWING MATERIAL TYPES:
   A. GALVANIZED STEEL WIRE CLOTH WITH 1/2" TO 1/4" MESH, MINIMUM WIRE DIAMETER OF 0.047".
   B. STAINLESS STEEL TYPE 304 OR 316 WITH 1/2" TO 1/4" MESH, MINIMUM WIRE DIAMETER OF 0.047".
   C. POLYETHYLENE OR POLYPROPYLENE GEONET WITH 0.15", MINIMUM THICKNESS, SUCH AS TENSAR DN-4 OR EQUAL.
9. THE SLOPE IN FRONT OF THE RETAINING WALL SHALL BE REMOVED IN LIFTS. THE DEPTH OF EACH LIFT SHALL BE LIMITED TO THE AMOUNT NECESSARY TO INSTALL A SINGLE HORIZONTAL ROW OF SOIL NAILS. AT NO TIME SHALL MORE THAN 5'-0" OF UNNAILED VERTICAL CUT BE EXPOSED. THE LENGTH OF EACH LIFT REMOVED SHALL BE LIMITED TO THE AMOUNT THAT CAN BE NAILED IN ONE DAY. AT NO TIME SHALL ANY UNNAILED CUT FACE BE EXPOSED FOR OVER 48 HOURS.
10. UPON COMPLETION OF EACH DAY'S INSTALLATION OF NAILS, PNEUMATICALLY PLACED CONCRETE SHALL BE APPLIED TO THE CUT FACE. THE CONCRETE SHALL BE REINFORCED WITH A SINGLE LAYER OF WELDED WIRE REINFORCING FABRIC, 4" X 4" W2.9.
11. THE PERMANENT CONCRETE FACIA WALL SHALL BE COMPLETED WITHIN 45 WORKING DAYS OF THE COMPLETION OF NAIL PLACEMENT.
12. PROVIDE POSITIVE DRAINAGE DURING CONSTRUCTION AND POST CONSTRUCTION PERIOD.
13. SQUARE FOOT SURFACE AREA OF RETAINING WALL IS MEASURED FROM TOP OF WALL TO BOTTOM OF WALL UNLESS NOTED OTHERWISE.
14. THE UTILITY INFORMATION SHOWN IS NOT GUARANTEED TO BE ACCURATE OR ALL INCLUSIVE. CONTRACTOR SHALL VERIFY THE LOCATIONS OF ALL UTILITIES PRIOR TO CONSTRUCTION. THE CONTRACTOR IS RESPONSIBLE FOR ALL DAMAGES TO UTILITIES CAUSED BY CONSTRUCTION OPERATIONS.
15. NO CONSTRUCTION SHALL BEGIN UNTIL ALL REFERENCED SHEETS ARE APPROVED FOR CONSTRUCTION.

SNW203 ESTIMATED QUANTITES

ITEM	DESC	DESCRIPTION	QUANT.	UNITS
410	6001	SOIL NAIL ANCHORS		LF
423	6017	RET WALL (SOIL NAILED)(FASCIA)(HOR SCH)	19875	SF
432	6008	RIPRAP (CONC)(CL B)(RR8&RR9)	33	CY
432	6045	RIPRAP (MOW STRIP)(4 IN)	8	CY
450	6014	RAIL (TY T551)	1152	LF

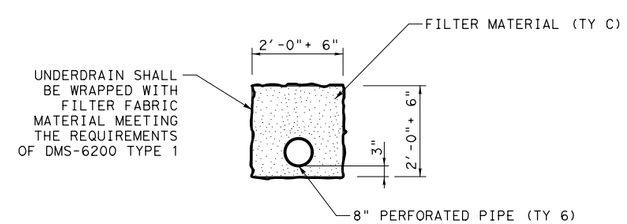

UNDERDRAIN DETAIL

NO.	REVISIONS	BY	DATE

PRELIMINARY
FOR REVIEW ONLY
THESE DOCUMENTS ARE PRELIMINARY AND SUBJECT TO CHANGE. THEY ARE NOT INTENDED FOR CONSTRUCTION OR BIDDING. THEY WERE PREPARED BY, OR UNDER THE SUPERVISION OF:
Engineer: JEFFREY E. WESANEN
P.E. No.: 117522
Date: 3/17/2017

PREFINAL SUBMITTAL

NOT FOR CONSTRUCTION

US 181 HARBOR BRIDGE

RETAINING WALL SECTION & DETAILS SNW203 (PACKAGE 12.0.01)

SCALE: 1"=10'

FLATIRON/DRAGADOS LLC

Stantec
Engineered by Stantec Consulting Services Inc.
Texas Registered Engineering Firm F-6324

Texas Department of Transportation
© 2017
SHEET 1 OF 1

FED. RD. DIV. NO.	FEDERAL AID PROJECT NO.		SHEET NO.
6	HP X597(1)		RTWL 004
STATE	STATE DIST. NO.	COUNTY	
TEXAS	CRP	NUECES	
CONT.	SECT	JOB	HIGHWAY NO.
0101	06	095	US181

PROJECT
US 181
HARBOR BRIDGE

REVIEW PHASE
☐ Detail Check ☐ Internal Review ☐ Design Review ☐ TxDOT
☐ Drawing ☐ Report ☐ Other:
Prepared By: Date:
☐ Drawing Checked Against Calculations ☐ Calculations Check Confirmed
Checked by: Date:
Back-Checked by: Date:
Corrected by: Date:
Verified by: Date:

Plotted: 3/17/2017 5:54:24 PM
Pen Table: HBR_RTWL.tbl
Design File: pw:\\stantec-sc-pw.bentley.com:stantec-sc-pw\Documents\01 Projects\HBR\Build Work\Design\07-Walls\07.01-Sheets\HBR_RET_SNW203_DT01.dgn