DRAINAGE AREA COMPUTATIONS (10-YR)

ID	RUNOFF COEFFICIENT	DRAINAGE AREA	TIME OF CONC.	TIME USED	INTENSITY	DISCHARGE
		AC	MIN	MIN	IN/HR	CFS
NB-US181-15	0.9	0.32	1.8	10	6.33	1.80
NB-US181-16	0.9	0.37	2.0	10	6.33	2.12
NB-US181-17	0.9	0.22	1.5	10	6.33	1.24
NB-US181-18	0.9	0.35	1.2	10	6.33	1.99

DRAINAGE AREA COMPUTATIONS (10-YR)

ID	RUNOFF COEFFICIENT	DRAINAGE AREA	TIME OF CONC.	TIME USED	INTENSITY	DISCHARGE
		AC	MIN	MIN	IN/HR	CFS
SB-US181-11B	0.9	0.13	2.1	10	6.33	0.74
SB-US181-13	0.9	0.12	2.1	10	6.33	0.66
SB-US181-14	0.9	0.10	2.0	10	6.33	0.55
SB-US181-17	0.9	0.27	1.6	10	6.33	1.53
SB-US181-18	0.9	0.22	1.5	10	6.33	1.27
SB-US181-19	0.9	0.23	1.6	10	6.33	1.32
SB-US181-20	0.9	0.35	1.4	10	6.33	1.99

DRAINAGE AREA COMPUTATIONS (10-YR)

ID	RUNOFF COEFFICIENT	DRAINAGE AREA	TIME OF CONC.	TIME USED	INTENSITY	DISCHARGE
		AC	MIN	MIN	IN/HR	CFS
BURL-EB-01EX	0.9	0.24	3.2	10	6.33	1.38
BURL-EB-02	0.9	0.31	3.2	10	6.33	1.74
BURL-EB-03	0.9	0.12	3.2	10	6.33	0.68
BURL-WB-01EX	0.9	0.25	3.2	10	6.33	1.41
BURL-WB-02	0.9	0.33	3.2	10	6.33	1.89
BURL-WB-03	0.9	0.09	3.2	10	6.33	0.50

DRAINAGE AREA COMPUTATIONS (10-YR)

ID	RUNOFF COEFFICIENT	DRAINAGE AREA	TIME OF CONC.	TIME USED	INTENSITY	DISCHARGE
		AC	MIN	MIN	IN/HR	CFS
BRPT-01	0.9	0.02	5.7	10	6.33	0.13
BRPT-02	0.9	0.02	5.7	10	6.33	0.14
BRPT-03	0.9	0.03	5.7	10	6.33	0.18
BRPT-04	0.9	0.03	5.7	10	6.33	0.18
BRPT-05	0.9	0.03	5.7	10	6.33	0.19
BRPT-06	0.9	0.09	5.7	10	6.33	0.50
BRPT-07	0.9	0.03	5.7	10	6.33	0.17

DRAINAGE AREA COMPUTATIONS (10-YR)

ID	RUNOFF COEFFICIENT	DRAINAGE AREA	TIME OF CONC.	TIME USED	INTENSITY	DISCHARGE
		AC	MIN	MIN	IN/HR	CFS
BENBXR-08	0.9	0.11	2.8	10	6.33	0.62
BENBXR-09	0.9	0.10	2.5	10	6.33	0.58
BENBXR-10	0.9	0.07	2.2	10	6.33	0.39
BENBXR-10A	0.9	0.10	2.2	10	6.33	0.59
BENBXR-11	0.9	0.05	2.2	10	6.33	0.29
BENBXR-12	0.9	0.13	2.0	10	6.33	0.76
BENBXR-13	0.9	0.19	1.6	10	6.33	1.07

DRAINAGE AREA COMPUTATIONS (10-YR)

ID	RUNOFF COEFFICIENT	DRAINAGE AREA	TIME OF CONC.	TIME USED	INTENSITY	DISCHARGE
		AC	MIN	MIN	IN/HR	CFS
NBFRN-05	0.9	0.43	4.6	10	6.33	2.43
NBFRN-09	0.9	0.22	2.8	10	6.33	1.22
NBFRN-10	0.9	0.26	2.0	10	6.33	1.46
NBFRN-11	0.86	0.46	4.4	10	6.33	2.49
NBFRN-19	0.9	0.35	4.2	10	6.33	1.97
NBFRN-20	0.9	0.22	2.2	10	6.33	1.26
NBFRN-21	0.9	0.26	4.1	10	6.33	1.50
NBFRN-29	0.9	0.39	5.9	10	6.33	2.23
NBFRN-30	0.9	0.16	1.5	10	6.33	0.92
NBFRN-31	0.9	0.35	5.4	10	6.33	2.02
NBFRN-40	0.9	0.24	3.3	10	6.33	1.40
NBFRN-41	0.9	0.29	3.6	10	6.33	1.67
NBFRN-50	0.9	0.73	5.0	10	6.33	4.17
NBFRN-60	0.9	0.45	5.6	10	6.33	2.54
NBFRN-61	0.9	0.39	7.9	10	6.33	2.19
NBFRN-62	0.9	0.15	7.9	10	6.33	0.84
NBFRN-63	0.9	0.17	5.7	10	6.33	0.98

DRAINAGE AREA COMPUTATIONS (10-YR)

ID	RUNOFF COEFFICIENT	DRAINAGE AREA	TIME OF CONC.	TIME USED	INTENSITY	DISCHARGE
		AC	MIN	MIN	IN/HR	CFS
BUSBXR-BD2	0.9	0.13	1.8	10	6.33	0.73
BUSBXR-BD3	0.9	0.09	1.2	10	6.33	0.53
BUSBXR-BD4	0.9	0.11	1.2	10	6.33	0.61
BUSBXR-BD5	0.9	0.10	1.2	10	6.33	0.60
BUSBXR-BD6	0.9	0.15	1.2	10	6.33	0.83
BUSBXR-BD7	0.9	0.14	1.2	10	6.33	0.80
BUSBXR-BD8	0.9	0.14	1.2	10	6.33	0.78

DRAINAGE AREA COMPUTATIONS (10-YR)

ID	RUNOFF COEFFICIENT	DRAINAGE AREA	TIME OF CONC.	TIME USED	INTENSITY	DISCHARGE
		AC	MIN	MIN	IN/HR	CFS
SBFRN-10	0.9	0.44	3.2	10	6.33	2.49
SBFRN-19	0.9	0.41	3.2	10	6.33	2.33
SBFRN-20	0.9	0.33	5.5	10	6.33	1.86
SBFRN-21	0.9	0.33	5.5	10	6.33	1.86
SBFRN-22	0.9	0.32	3.9	10	6.33	1.80
SBFRN-23	0.9	0.43	5.5	10	6.33	2.46
SBFRN-30	0.9	0.65	4.7	10	6.33	3.69
SBFRN-31	0.9	0.24	2.9	10	6.33	1.39
SBFRN-40	0.9	0.61	5.7	10	6.33	3.50
SBFRN-50	0.9	0.32	3.7	10	6.33	1.80
SBFRN-51	0.9	0.42	7.2	10	6.33	2.40
SBFRN-52	0.9	0.43	3.2	10	6.33	2.43
SBFRN-60	0.9	0.46	5.9	10	6.33	2.60
SBFRN-MH14	0.9	0.21	2.0	10	6.33	1.19

DRAINAGE AREA COMPUTATIONS (10-YR)

ID	RUNOFF COEFFICIENT	DRAINAGE AREA	TIME OF CONC.	TIME USED	INTENSITY	DISCHARGE
		AC	MIN	MIN	IN/HR	CFS
DCH181-A2	0.3	0.04	1.9	10	6.33	0.07
DNL0-1	0.3	0.54	1.9	10	6.33	1.02
DNL0-2	0.3	0.05	1.9	10	6.33	0.09
DNL1-1	0.68	0.54	1.9	10	6.33	2.31
DNL1-2	0.75	0.68	1.9	10	6.33	3.26
DNL1-4	0.72	0.66	1.9	10	6.33	2.98
DNL2-1	0.9	0.07	1.5	10	6.33	0.43
DNL2-2	0.9	0.13	1.5	10	6.33	0.74
DNL2-3	0.46	0.19	2.5	10	6.33	0.55
DNL2-5	0.49	0.16	2.5	10	6.33	0.49
DNL2-6	0.54	0.12	2.5	10	6.33	0.43
DNL2-8	0.44	0.35	2.5	10	6.33	0.97
DNR0-1	0.3	0.24	1.9	10	6.33	0.45
DNR0-2	0.3	0.18	1.9	10	6.33	0.35
DNR1-11	0.76	0.44	4.8	10	6.33	2.14
DNR1-13	0.74	0.47	4.8	10	6.33	2.19
DNR1-3	0.9	0.26	2.0	10	6.33	1.48
DNR1-4	0.78	0.15	2.0	10	6.33	0.75
DNR1-5	0.83	0.34	2.0	10	6.33	1.79
DNR1-7	0.73	0.31	2.0	10	6.33	1.44
DNR1-8	0.71	0.26	2.0	10	6.33	1.15
DNR1-9	0.74	0.19	2.0	10	6.33	0.91
DNR2-1	0.3	0.08	1.6	10	6.33	0.14
DNR2-2	0.3	0.21	2.5	10	6.33	0.41

DRAINAGE AREA COMPUTATIONS (10-YR)

ID	RUNOFF COEFFICIENT	DRAINAGE AREA	TIME OF CONC.	TIME USED	INTENSITY	DISCHARGE
		AC	MIN	MIN	IN/HR	CFS
SIDE-1	0.8	2.61	15.0	15	5.36	11.19
SIDE-2	0.3	0.28	2.0	10	6.33	0.52
SIDE-3	0.8	1.54	15.0	15	5.36	6.62
SIDE-4	0.8	2.21	15.0	15	5.36	9.50
SIDE-5	0.3	0.19	2.0	10	6.33	0.36

NOTE:
THESE TABLES CONTAIN HYDRAULIC DATA FOR DRAINAGE SYSTEMS IN PACKAGES 1A AND 1B. REFER TO CORRESPONDING PACKAGE FOR PLAN & PROFILE SHEETS.

NO.	REVISIONS	BY	DATE

PRELIMINARY
FOR REVIEW ONLY
THESE DOCUMENTS ARE PRELIMINARY AND SUBJECT TO CHANGE. THEY ARE NOT INTENDED FOR CONSTRUCTION OR BIDDING. THEY WERE PREPARED BY, OR UNDER THE SUPERVISION OF:
Engineer: JACEK KWASNIEWSKI
P.E. No.: 95757
Date: 6/9/2017

RELEASE FOR CONSTRUCTION

US 181 HARBOR BRIDGE

HYDRAULIC DATA SHEET

FLATIRON/DRAGADOS

FLATIRON/DRAGADOS LLC

Stantec
Engineered by Stantec Consulting Services Inc.
Texas Registered Engineering Firm F-6324

Texas Department of Transportation
© 2017

SHEET 1 OF 7

FED. RD. DIV. NO.	FEDERAL AID PROJECT NO.		SHEET NO.
6	HP X597(1)		DRN 001
STATE	STATE DIST. NO.	COUNTY	
TEXAS	CRP	NUECES	
CONT.	SECT	JOB	HIGHWAY NO.
0101	06	095	US181

PROJECT
US 181 HARBOR BRIDGE

Checked by: Date:
Back-Checked by: Date:
Corrected by: Date:
Verified by: Date:

☐ TxDOT
☐ Detail Check ☐ Internal Review ☐ Design Review
☐ Drawing ☐ Report ☐ Other:
Prepared By: Date:
☐ Drawing Checked Against Calculations ☐ Calculations Check Confirmed
REVIEW PHASE

Plotted: 6/9/2017 1:54:14 PM
Pen Table: HBR_Packl A_DRN.tbl
Design File: c:\pw_online\stantec\dms97318\HBR_DRN_NORTH_HYD01.dgn

NOTE:
THESE TABLES CONTAIN HYDRAULIC DATA FOR DRAINAGE SYSTEMS IN PACKAGES 1A AND 1B. REFER TO CORRESPONDING PACKAGE FOR PLAN & PROFILE SHEETS.

INLET COMPUTATIONS (10-YR)

ID	PROFILE TYPE	TYPE	LIBRARY ITEM DESCRIPTION	DISCHARGE	BYPASS FLOW	CAPACITY	BYPASS NODE ID	CURB DEPRESSION	CURB LENGTH	GRATE LENGTH	GRATE WIDTH	GRATE AREA	COMPUTED PONDED WIDTH	MAX PONDED WITDH	COMPUTED PONDED DEPTH	MAX PONDED DEPTH
				CFS	CFS	CFS		FT	FT	FT	FT	SF	FT	FT	FT	FT
NB-US181-15	On Grade	Grate	POD 4x4 in 5x5 out 4x4 grate	2.02	0.22	1.8	BENBXR-13	n/a	n/a	4.17	4.17	8.19	8.61	9.92	0.17	0.5
NB-US181-16	On Grade	Grate	POD 4x4 in 5x5 out 4x4 grate	2.17	0.22	1.95	NB-US181-15	n/a	n/a	4.17	4.17	8.19	7.98	10	0.16	0.5
NB-US181-17	On Grade	Grate	POD 4x4 in 5x5 out 4x4 grate	1.36	0.05	1.31	NB-US181-16	n/a	n/a	4.17	4.17	8.19	6.17	10	0.12	0.5
NB-US181-18	On Grade	Grate	POD 4x4 in 5x5 out 4x4 grate	1.99	0.12	1.87	NB-US181-17	n/a	n/a	4.17	4.17	8.19	6.84	10	0.14	0.5

INLET COMPUTATIONS (10-YR)

ID	PROFILE TYPE	TYPE	LIBRARY ITEM DESCRIPTION	DISCHARGE	BYPASS FLOW	CAPACITY	BYPASS NODE ID	CURB DEPRESSION	CURB LENGTH	GRATE LENGTH	GRATE WIDTH	GRATE AREA	COMPUTED PONDED WIDTH	MAX PONDED WITDH	COMPUTED PONDED DEPTH	MAX PONDED DEPTH
				CFS	CFS	CFS		FT	FT	FT	FT	SF	FT	FT	FT	FT
SB-US181-17	On Grade	Grate	PSL FG SFG 4x4 in 5x5 out 4x4 grate	1.58	0.09	1.49	SBFRN-23	n/a	n/a	4.17	4.17	8.19	6.88	8	0.14	0.5
SB-US181-18	On Grade	Grate	POD 4x4 in 5x5 out 4x4 grate	1.32	0.05	1.27	SB-US181-17	n/a	n/a	4.17	4.17	8.19	6.23	8	0.12	0.5
SB-US181-19	On Grade	Grate	POD 4x4 in 5x5 out 4x4 grate	1.42	0.05	1.37	SB-US181-18	n/a	n/a	4.17	4.17	8.19	6.21	9	0.12	0.5
SB-US181-20	On Grade	Grate	POD 4x4 in 5x5 out 4x4 grate	1.99	0.1	1.89	SB-US181-19	n/a	n/a	4.17	4.17	8.19	6.53	10	0.15	0.5

INLET COMPUTATIONS (10-YR)

ID	PROFILE TYPE	TYPE	LIBRARY ITEM DESCRIPTION	DISCHARGE	BYPASS FLOW	CAPACITY	BYPASS NODE ID	CURB DEPRESSION	CURB LENGTH	GRATE LENGTH	GRATE WIDTH	GRATE AREA	COMPUTED PONDED WIDTH	MAX PONDED WITDH	COMPUTED PONDED DEPTH	MAX PONDED DEPTH
				CFS	CFS	CFS		FT	FT	FT	FT	SF	FT	FT	FT	FT
BENBXR-08	On Grade	Grate	PSL FG SFG 4x4 in 5x5 out 4x4 grate	0.62	0.02	0.61	BENBXR-09	n/a	n/a	4.17	4.17	8.19	7.14	8	0.14	0.5
BENBXR-09	On Grade	Grate	PSL FG SFG 4x4 in 5x5 out 4x4 grate	0.6	0.02	0.58	BENBXR-10A	n/a	n/a	4.17	4.17	8.19	7.05	8	0.14	0.5
BENBXR-10	On Grade	Grate	PSL FG SFG 4x4 in 5x5 out 4x4 grate	0.39	0	0.39	BENBXR-10A	n/a	n/a	4.17	4.17	8.19	5.23	8	0.13	0.5
BENBXR-10A	Sag	Grate	PSL FG SFG 4x4 in 5x5 out 4x4 grate	0.61	0	9.1		n/a	n/a	4.17	4.17	8.19	6.2	8	0.08	0.5
BENBXR-11	On Grade	Grate	PSL FG SFG 4x4 in 5x5 out 4x4 grate	0.33	0	0.33	BENBXR-10	n/a	n/a	4.17	4.17	8.19	5.73	8	0.14	0.5
BENBXR-12	On Grade	Grate	PSL FG SFG 4x4 in 5x5 out 4x4 grate	0.84	0.04	0.81	BENBXR-11	n/a	n/a	4.17	4.17	8.19	8.01	9.5	0.16	0.5
BENBXR-13	On Grade	Grate	PSL FG SFG 4x4 in 5x5 out 4x4 grate	1.29	0.08	1.2	BENBXR-12	n/a	n/a	4.17	4.17	8.19	7.54	9.5	0.15	0.5

INLET COMPUTATIONS (10-YR)

ID	PROFILE TYPE	TYPE	LIBRARY ITEM DESCRIPTION	DISCHARGE	BYPASS FLOW	CAPACITY	BYPASS NODE ID	CURB DEPRESSION	CURB LENGTH	GRATE LENGTH	GRATE WIDTH	GRATE AREA	COMPUTED PONDED WIDTH	MAX PONDED WITDH	COMPUTED PONDED DEPTH	MAX PONDED DEPTH
				CFS	CFS	CFS		FT	FT	FT	FT	SF	FT	FT	FT	FT
BUSBXR-BD1	On Grade	Grate	PCO Curb Inlet w/ 2 Ext (3x5)	1.5	0.29	1.21	BUSBXR-BD2	n/a	n/a	1.14	3.44	3.9	7.62	8	0.15	0.5
BUSBXR-BD2	On Grade	Grate	Bridge Drain (Cast)	1.02	0.12	0.9	BUSBXR-BD3	n/a	n/a	1.14	3.44	3.9	6.34	8	0.13	0.5
BUSBXR-BD3	On Grade	Grate	Bridge Drain (Cast)	0.65	0.03	0.61	BUSBXR-BD4	n/a	n/a	1.14	3.44	3.9	5.2	8	0.1	0.5
BUSBXR-BD4	On Grade	Grate	Bridge Drain (Cast)	0.64	0.03	0.61	BUSBXR-BD5	n/a	n/a	1.14	3.44	3.9	5.06	8	0.1	0.5
BUSBXR-BD5	On Grade	Grate	Bridge Drain (Cast)	0.62	0.02	0.6	BUSBXR-BD6	n/a	n/a	1.14	3.44	3.9	4.79	8	0.1	0.5
BUSBXR-BD6	On Grade	Grate	Bridge Drain (Cast)	0.85	0.06	0.8	BUSBXR-BD7	n/a	n/a	1.14	3.44	3.9	5.42	8	0.11	0.5
BUSBXR-BD7	On Grade	Grate	Bridge Drain (Cast)	0.86	0.07	0.79	BUSBXR-BD8	n/a	n/a	1.14	3.44	3.9	5.63	8	0.11	0.5
BUSBXR-BD8	On Grade	Grate	Bridge Drain (Cast)	0.85	0.07	0.78	SBFRN-19	n/a	n/a	1.14	3.44	3.9	5.61	8	0.11	0.5

INLET COMPUTATIONS (10-YR)

ID	PROFILE TYPE	TYPE	LIBRARY ITEM DESCRIPTION	DISCHARGE	BYPASS FLOW	CAPACITY	BYPASS NODE ID	CURB DEPRESSION	CURB LENGTH	GRATE LENGTH	GRATE WIDTH	GRATE AREA	COMPUTED PONDED WIDTH	MAX PONDED WITDH	COMPUTED PONDED DEPTH	MAX PONDED DEPTH
				CFS	CFS	CFS		FT	FT	FT	FT	SF	FT	FT	FT	FT
BURL-EB-01EX	Sag	Curb	PCO Curb Inlet w/ 2 Ext (3x5)	1.38	0	6.26		0.25	5	n/a	n/a	n/a	7.49	13.5	0.18	0.5
BURL-EB-02	On Grade	Curb	PCO Curb Inlet w/ 2 Ext (3x5)	1.74	0	1.74	BURL-EB-01	0.25	14	n/a	n/a	n/a	9.47	13.5	0.19	0.5
BURL-EB-03	On Grade	Curb	PCO Curb Inlet (3x5)	0.68	0.01	0.67		0.25	5	n/a	n/a	n/a	6.52	13.5	0.13	0.5
BURL-INT-01	Sag	Grate	PAZD FG 4x4-4	15.88	0	9.1		n/a	n/a	4	4	8.2	16.41	20	0.72	0.5
BURL-INT-02	Sag	Grate	PAZD FG 4x4-4	4.1	0	9.1		n/a	n/a	4	4	8.2	12.84	20	0.29	0.5
BURL-INT-03	Sag	Grate	PAZD FG 4x4-4	4.42	0	9.1		n/a	n/a	4	4	8.2	12.09	20	0.31	0.5
BURL-INT-04	Sag	Grate	PAZD FG 4x4-4	0.9	0	9.1		n/a	n/a	4	4	8.2	16.70	20	0.11	0.5
BURL-WB-01EX	Sag	Curb	PCO Curb Inlet (3x5)	1.41	0	6.26		0.25	5	n/a	n/a	n/a	0.06	13.5	0.18	0.5
BURL-WB-02	On Grade	Curb	PCO Curb Inlet w/ 2 Ext (3x5)	1.89	0	1.89	BURL-WB-01	0.25	14	n/a	n/a	n/a	9.76	13.5	0.2	0.5
BURL-WB-03	On Grade	Curb	PCO Curb Inlet (3x5)	0.5	0	0.5		0.25	5	n/a	n/a	n/a	5.83	13.5	0.12	0.5

INLET COMPUTATIONS (10-YR)

ID	PROFILE TYPE	TYPE	LIBRARY ITEM DESCRIPTION	DISCHARGE	BYPASS FLOW	CAPACITY	BYPASS NODE ID	CURB DEPRESSION	CURB LENGTH	GRATE LENGTH	GRATE WIDTH	GRATE AREA	COMPUTED PONDED WIDTH	MAX PONDED WITDH	COMPUTED PONDED DEPTH	MAX PONDED DEPTH
				CFS	CFS	CFS		FT	FT	FT	FT	SF	FT	FT	FT	FT
NB-INT-01	Sag	Grate	PAZD FG 4x4-4	5	0	9.1		n/a	n/a	4	4	8.2	14.97	20	0.34	0.5
NB-INT-03	Sag	Grate	PAZD FG 4x4-4	25	0	9.1		n/a	n/a	4	4	8.2	0	20	1.29	0.5
NB-INT-04	Sag	Grate	PAZD FG 4x4-4	25.27	0	9.1		n/a	n/a	4	4	8.2	69.58	20	1.32	0.5
NB-INT-05	Sag	Grate	PAZD FG 4x4-4	18.32	0	9.1		n/a	n/a	4	4	8.2	241.62	20	0.8	0.5
NB-INT-06	Sag	Grate	PAZD FG 4x4-4	4.4	0	9.1		n/a	n/a	4	4	8.2	3.17	20	0.31	0.5
NB-INT-09	Sag	Grate	PAZD FG 4x4-4	10.4	0	9.1		n/a	n/a	4	4	8.2	165.66	20	0.55	0.5
NB-INT-10	Sag	Grate	PAZD FG 4x4-4	5.2	0	9.1		n/a	n/a	4	4	8.2	22.57	20	0.34	0.5
NB-INT-11	Sag	Grate	PAZD FG 4x4-4	9.8	0	9.1		n/a	n/a	4	4	8.2	10.17	20	0.53	0.5
NB-INT-19	Sag	Grate	PAZD FG 4x4-4	5	0	9.1		n/a	n/a	4	4	8.2	0	13.5	0.34	0.5
NB-INT-20	Sag	Grate	PAZD FG 4x4-4	5	0	9.1		n/a	n/a	4	4	8.2	0	13.5	0.34	0.5

DESIGN IN PROGRESS
(PACKAGE 1B)

NO.	REVISIONS	BY	DATE

PRELIMINARY
FOR REVIEW ONLY
THESE DOCUMENTS ARE PRELIMINARY AND SUBJECT TO CHANGE. THEY ARE NOT INTENDED FOR CONSTRUCTION OR BIDDING. THEY WERE PREPARED BY, OR UNDER THE SUPERVISION OF:
Engineer: JACEK KWASNIEWSKI
P.E. No.: 95757
Date: 6/9/2017

RELEASE FOR CONSTRUCTION

US 181 HARBOR BRIDGE

HYDRAULIC DATA SHEET

FLATIRON/DRAGADOS LLC

Stantec
Engineered by Stantec Consulting Services Inc.
Texas Registered Engineering Firm F-6324

Texas Department of Transportation
© 2017
SHEET 2 OF 7

FED. RD. DIV. NO.	FEDERAL AID PROJECT NO.		SHEET NO.
6	HP X597(1)		DRN 002
STATE	STATE DIST. NO.	COUNTY	
TEXAS	CRP	NUECES	
CONT.	SECT	JOB	HIGHWAY NO.
0101	06	095	US181

PROJECT
US 181 HARBOR BRIDGE

Checked by: Date:
Back-Checked by: Date:
Corrected by: Date:
Verified by: Date:

☐ TxDOT
☐ Design Review
☐ Other: ____ Date:
☐ Calculations Check Confirmed
☐ Internal Review
☐ Report
☐ Drawing Checked Against Calculations
☐ Detail Check
☐ Drawing
Prepared By:
REVIEW PHASE

Plotted: 6/9/2017 1:54:26 PM
Pen Table: HBR_Pack1A_DRN.tbl
Design File: c:\pw_online\stantec\dms97318\HBR_DRN_NORTH_HYD02.dgn

NOTE:
THESE TABLES CONTAIN HYDRAULIC DATA FOR DRAINAGE SYSTEMS IN PACKAGES 1A AND 1B. REFER TO CORRESPONDING PACKAGE FOR PLAN & PROFILE SHEETS.

INLET COMPUTATIONS (10-YR)

ID	PROFILE TYPE	TYPE	LIBRARY ITEM DESCRIPTION	DISCHARGE	BYPASS FLOW	CAPACITY	BYPASS NODE ID	CURB DEPRESSION	CURB LENGTH	GRATE LENGTH	GRATE WIDTH	GRATE AREA	COMPUTED PONDED WIDTH	MAX PONDED WITDH	COMPUTED PONDED DEPTH	MAX PONDED DEPTH
				CFS	CFS	CFS		FT	FT	FT	FT	SF	FT	FT	FT	FT
NBFRN-05	On Grade	Curb	PCO Curb Inlet w/ 2 Ext (3x5)	2.43	0	2.43		0.25	14	n/a	n/a	n/a	11.91	13.5	0.24	0.5
NBFRN-09	On Grade	Curb	PCO Curb Inlet w/ 2 Ext (3x5)	1.22	0	1.22	NBFRN-10	0.25	14	n/a	n/a	n/a	9.21	13.5	0.18	0.5
NBFRN-10	Sag	Curb	PCO Curb Inlet (3x5)	1.46	0	6.26		0.25	5	n/a	n/a	n/a	9.49	13.5	0.19	0.5
NBFRN-11	On Grade	Curb	PCO Curb Inlet w/ 2 Ext (3x5)	2.49	0	2.49	NBFRN-10	0.25	14	n/a	n/a	n/a	12.03	13.5	0.24	0.5
NBFRN-19	On Grade	Curb and Grate	PCU Curb Inlet w/ 2 Ext (3x5)	1.97	0	1.97	NBFRN-20	0.25	14	4.96	1.39	2.29	11.01	13.5	0.22	0.5
NBFRN-20	Sag	Curb and Grate	PCU Curb Inlet (3x5)	1.26	0	10.48		0.25	5	4.96	1.39	2.29	11.15	13.5	0.22	0.5
NBFRN-21	On Grade	Curb and Grate	PCU Curb Inlet w/ 2 Ext (3x5)	1.5	0	1.5	NBFRN-20	0.25	14	4.96	1.39	2.29	9.93	13.5	0.2	0.5
NBFRN-29	On Grade	Curb and Grate	PCU Curb Inlet w/ 2 Ext (3x5)	2.23	0	2.23	NBFRN-30	0.25	14	4.96	1.39	2.29	11.53	13.5	0.23	0.5
NBFRN-30	Sag	Curb and Grate	PCU Curb Inlet (3x5)	0.92	0	10.48		0.25	5	4.96	1.39	2.29	9.03	13.5	0.18	0.5
NBFRN-31	On Grade	Curb and Grate	PCU Curb Inlet w/ 2 Ext (3x5)	2.02	0	2.02	NBFRN-30	0.25	14	4.96	1.39	2.29	11.11	13.5	0.22	0.5
NBFRN-40	Sag	Curb	PCO Curb Inlet (3x5)	1.4	0	6.26		0.25	5	n/a	n/a	n/a	9.19	13.5	0.18	0.5
NBFRN-41	On Grade	Curb	PCO Curb Inlet w/ 1 Ext (Right) (3x5)	1.67	0	1.67	NBFRN-40	0.25	9.5	n/a	n/a	n/a	9.74	13.5	0.19	0.5
NBFRN-50	Sag	Curb and Grate	PCU Curb Inlet w/ 2 Ext (3x5)	4.17	0	17.8		0.25	14	4.96	1.39	2.29	11.25	13.5	0.5	0.5
NBFRN-60	Sag	Curb	PCO Curb Inlet w/ 1 Ext (Right) (3x5)	2.54	0	9.92		0.25	9.5	n/a	n/a	n/a	11.14	13.5	0.2	0.5
NBFRN-61	On Grade	Curb	PCO Curb Inlet w/ 1 Ext (Right) (3x5)	2.19	0	2.19	NBFRN-60	0.25	9.5	n/a	n/a	n/a	11.46	13.5	0.23	0.5
NBFRN-62	On Grade	Curb	PCO Curb Inlet w/ 2 Ext (3x5)	0.84	0	0.84	NBFRN-61	0.25	14	n/a	n/a	n/a	4.29	9.25	0.23	0.5
NBFRN-63	On Grade	Curb	PCO Curb Inlet (3x5)	0.98	0	0.98	BRPT-06	0.25	5	n/a	n/a	n/a	4.55	9.25	0.25	0.5

INLET COMPUTATIONS (10-YR)

ID	PROFILE TYPE	TYPE	LIBRARY ITEM DESCRIPTION	DISCHARGE	BYPASS FLOW	CAPACITY	BYPASS NODE ID	CURB DEPRESSION	CURB LENGTH	GRATE LENGTH	GRATE WIDTH	GRATE AREA	COMPUTED PONDED WIDTH	MAX PONDED WITDH	COMPUTED PONDED DEPTH	MAX PONDED DEPTH
				CFS	CFS	CFS		FT	FT	FT	FT	SF	FT	FT	FT	FT
SBFRN-10	Sag	Curb	PCO Curb Inlet w/ 1 Ext (Left) (3x5)	2.49	0	9.92		0.25	9.5	n/a	n/a	n/a	11.56	13.5	0.2	0.5
SBFRN-19	On Grade	Curb	PCO Curb Inlet w/ 2 Ext (3x5)	2.39	0	2.39	SBFRN-20	0.25	14	n/a	n/a	n/a	9.47	13.5	0.19	0.5
SBFRN-20	Sag	Curb	PCO Curb Inlet w/ 2 Ext (3x5)	1.86	0	13.58		0.25	14	n/a	n/a	n/a	10.74	13.5	0.13	0.5
SBFRN-21	On Grade	Curb	PCO Curb Inlet w/ 2 Ext (3x5)	1.86	0	1.86	SBFRN-20	0.25	14	n/a	n/a	n/a	10.78	13.5	0.22	0.5
SBFRN-22	On Grade	Curb	PCO Curb Inlet w/ 2 Ext (3x5)	1.8	0	1.8	SBFRN-21	0.25	14	n/a	n/a	n/a	10.65	13.5	0.21	0.5
SBFRN-23	On Grade	Curb	PCO Curb Inlet w/ 2 Ext (3x5)	2.56	0	2.56	SBFRN-22	0.25	14	n/a	n/a	n/a	10.18	13.5	0.21	0.5
SBFRN-30	Sag	Curb	PCO Curb Inlet w/ 2 Ext (3x5)	3.69	0	13.58		0.25	14	n/a	n/a	n/a	10.58	13.5	0.21	0.5
SBFRN-31	On Grade	Curb	PCO Curb Inlet w/ 1 Ext (Left) (3x5)	1.39	0	1.39	SBFRN-30	0.25	9.5	n/a	n/a	n/a	10.69	13.5	0.16	0.5
SBFRN-40	Sag	Curb	PCO Curb Inlet (3x5)	3.5	0	6.26		0.25	5	n/a	n/a	n/a	10.92	13.5	0.34	0.5
SBFRN-50	Sag	Curb	PCO Curb Inlet (3x5)	1.8	0	6.26		0.25	5	n/a	n/a	n/a	10.89	13.5	0.22	0.5
SBFRN-51	On Grade	Curb	PCO Curb Inlet w/ 2 Ext (3x5)	2.4	0	2.4	SBFRN-50	0.25	14	n/a	n/a	n/a	11.85	13.5	0.24	0.5
SBFRN-52	On Grade	Curb	PCO Curb Inlet w/ 2 Ext (3x5)	2.43	0	2.43	SBFRN-51	0.25	14	n/a	n/a	n/a	11.92	13.5	0.24	0.5
SBFRN-60	Sag	Curb	PCO Curb Inlet (3x5)	2.6	0	6.26		0.25	5	n/a	n/a	n/a	5.87	9.25	0.28	0.5

INLET COMPUTATIONS (10-YR)

ID	PROFILE TYPE	TYPE	LIBRARY ITEM DESCRIPTION	DISCHARGE	BYPASS FLOW	CAPACITY	BYPASS NODE ID	CURB DEPRESSION	CURB LENGTH	GRATE LENGTH	GRATE WIDTH	GRATE AREA	COMPUTED PONDED WIDTH	MAX PONDED WITDH	COMPUTED PONDED DEPTH	MAX PONDED DEPTH
DCH181-A1	Sag	Grate	PAZD FG 4x4-4	0.05	0	9.1		n/a	n/a	4	4	8.2	0	10	0.02	0.5
DCH181-A10	On Grade	Grate	PAZD FG 5x5-4	0.05	0	0.05		n/a	n/a	4	4	8.2	6.45	8	0.02	0.5
DCH181-A2	Sag	Grate	PAZD FG 4x4-4	0.07	0	9.1		n/a	n/a	4	4	8.2	0.68	7	0.02	0.5
DCH181-A3	Sag	Grate	PAZD FG 4x4-4	0.01	0	31.16		n/a	n/a	4	4	8.2	0	12	0.01	2
DCH181-A4	Sag	Grate	PAZD FG 4x4-4	0.05	0	31.16		n/a	n/a	4	4	8.2	0.74	12	0.02	2
DCH181-A5	On Grade	Grate	PAZD FG 5x5-4	0.1	0	0.1		n/a	n/a	4	4	8.2	3.08	10	0.06	0.5
DCH181-A6	On Grade	Grate	PAZD FG 5x5-4	0.1	0	0.1		n/a	n/a	4	4	8.2	0.8	10	0.2	0.5
DCH181-A7	Sag	Grate	PAZD FG 4x4-4	0.1	0	34.84		n/a	n/a	4	4	8.2	0.96	16	0.02	2.5
DCH181-A8	Sag	Grate	PAZD FG 4x4-4	0.05	0	25.12		n/a	n/a	4	4	8.2	0.79	8	0.02	1.3
DCH181-A9	On Grade	Grate	PAZD FG 4x4-4	0.05	0	0.05		n/a	n/a	4	4	8.2	0.39	8	0.1	0.5
DCH181-SD1	Sag	Slotted Drain	20' TYPE SD-T Slotted Drain	0.05	0	38.12		n/a	n/a	n/a	n/a	n/a	0	13.5	0.03	0.5

INLET COMPUTATIONS (10-YR)

ID	PROFILE TYPE	TYPE	LIBRARY ITEM DESCRIPTION	DISCHARGE	BYPASS FLOW	CAPACITY	BYPASS NODE ID	CURB DEPRESSION	CURB LENGTH	GRATE LENGTH	GRATE WIDTH	GRATE AREA	COMPUTED PONDED WIDTH	MAX PONDED WITDH	COMPUTED PONDED DEPTH	MAX PONDED DEPTH
BRPT-01	Sag	Curb	PCO Curb Inlet (3x5)	0.13	0	6.26		0.25	5	n/a	n/a	n/a	0.37	9.5	0.04	0.5
BRPT-02	On Grade	Curb	PCO Curb Inlet (3x5)	0.14	0	0.14	BRPT-01	0.25	5	n/a	n/a	n/a	8.37	9.5	0.03	0.5
BRPT-03	On Grade	Curb	PCO Curb Inlet w/ 1 Ext (Left) (3x5)	0.18	0	0.18	BRPT-02	0.25	9.5	n/a	n/a	n/a	8.38	9.5	0.03	0.5
BRPT-04	On Grade	Curb	PCO Curb Inlet w/ 1 Ext (Left) (3x5)	0.18	0	0.18	BRPT-03	0.25	9.5	n/a	n/a	n/a	8.4	9.5	0.03	0.5
BRPT-05	On Grade	Curb	PCO Curb Inlet w/ 1 Ext (Left) (3x5)	0.19	0	0.19	BRPT-04	0.25	9.5	n/a	n/a	n/a	8.46	9.5	0.03	0.5
BRPT-06	Sag	Curb and Grate	PCO Curb Inlet (3x5)	0.5	0	10.48		0.25	5	4.96	1.39	2.29	30.38	9.5	0.12	0.5
BRPT-07	On Grade	Curb	PCO Curb Inlet w/ 1 Ext (Left) (3x5)	0.17	0	0.17	BRPT-06	0.25	9.5	n/a	n/a	n/a	8.35	9.5	0.03	0.5

DESIGN IN PROGRESS (PACKAGE 1B)

INLET COMPUTATIONS (10-YR)

ID	PROFILE TYPE	TYPE	LIBRARY ITEM DESCRIPTION	DISCHARGE	BYPASS FLOW	CAPACITY	BYPASS NODE ID	CURB DEPRESSION	CURB LENGTH	GRATE LENGTH	GRATE WIDTH	GRATE AREA	COMPUTED PONDED WIDTH	MAX PONDED WITDH	COMPUTED PONDED DEPTH	MAX PONDED DEPTH
				CFS	CFS	CFS		FT	FT	FT	FT	SF	FT	FT	FT	FT
TANK-A1	On Grade	Grate	PAZD FG 4x4-4	0.1	0	0.1	TANK-A2	n/a	n/a	4	4	8.2	1.58	10	0.09	0.5
TANK-A2	Sag	Grate	PAZD FG 4x4-4	0.1	0	9.1		n/a	n/a	4	4	8.2	1.94	10	0.02	0.5
TANK-A3	On Grade	Grate	PAZD FG 4x4-4	0.1	0	0.1	TANK-A1	n/a	n/a	4	4	8.2	1.94	10	0.1	0.5
TANK-A5	Sag	Grate	PAZD FG 4x4-4	0.1	0	9.1		n/a	n/a	4	4	8.2	3.61	10	0.02	0.5

NO.	REVISIONS	BY	DATE

PRELIMINARY
FOR REVIEW ONLY
THESE DOCUMENTS ARE PRELIMINARY AND SUBJECT TO CHANGE. THEY ARE NOT INTENDED FOR CONSTRUCTION OR BIDDING. THEY WERE PREPARED BY, OR UNDER THE SUPERVISION OF:
Engineer: JACEK KWASNIEWSKI
P.E. No.: 95757
Date: 6/9/2017

RELEASE FOR CONSTRUCTION

US 181 HARBOR BRIDGE

HYDRAULIC DATA SHEET

FLATIRON/DRAGADOS LLC

Stantec
Engineered by Stantec Consulting Services Inc.
Texas Registered Engineering Firm F-6324

Texas Department of Transportation
© 2017

SHEET 3 OF 7

FED. RD. DIV. NO.	FEDERAL AID PROJECT NO.		SHEET NO.
6	HP X597(1)		DRN 003
STATE	STATE DIST. NO.	COUNTY	
TEXAS	CRP	NUECES	
CONT.	SECT	JOB	HIGHWAY NO.
0101	06	095	US181

PROJECT: US 181 HARBOR BRIDGE

REVIEW PHASE: ☐ Detail Check ☐ Internal Review ☐ Design Review ☐ TxDOT ☐ Drawing ☐ Report ☐ Other:

Prepared By: Date: ☐ Drawing Checked Against Calculations ☐ Calculations Check Confirmed

Checked by: Date: Back-Checked by: Date: Corrected by: Date: Verified by: Date:

Plotted: 6/9/2017 1:55:20 PM
Pen Table: HBR_Pack1A_DRN.tbl
Design File: c:\pw_online\stantec\ams97318\HBR_DRN_NORTH_HY003.dgn

NOTE:
THESE TABLES CONTAIN HYDRAULIC DATA FOR DRAINAGE SYSTEMS IN PACKAGES 1A AND 1B. REFER TO CORRESPONDING PACKAGE FOR PLAN & PROFILE SHEETS.

LINK COMPUTATIONS (10-YR)

UPSTREAM NODE ID	DOWNSTREAM NODE ID	INVERT UPSTREAM ELEVATION	HGL UPSTREAM ELEVATION	INVERT DOWNSTREAM ELEVATION	HGL DOWNSTREAM ELEVATION	UNIFORM DEPTH	UNIFORM VELOCITY	ACTUAL VELOCITY UPSTREAM	ACTUAL VELOCITY DOWNSTREAM	LIBRARY ITEM	NO. OF BARRELS	LENGTH	SLOPE	FRICTION SLOPE	MANNING'S N VALUE	DISCHARGE	CAPACITY
		FT	FT	FT	FT	FT	FPS	FPS	FPS			FT	%	%		CFS	CFS
JCT-2	CULV-OUT1	-0.95	1.02	-1.00	1.01	0.88	5.53	2.47	2.43	6'S x 6'H RCB	1	15.30	0.327	0.003	0.012	29.25	399.63
BRPT-07	JCT-2	-0.70	1.07	-0.95	1.02	1.16	4.20	2.75	2.47	6'S x 6'H RCB	1	176.29	0.142	0.001	0.012	29.25	263.24
JCT-1	BRPT-07	-0.60	1.14	-0.70	1.07	1.04	4.64	2.79	2.74	6'S x 6'H RCB	1	50.44	0.198	0.002	0.012	29.08	311.26
CULV-01	JCT-1	0.00	1.48	-0.60	1.14	1.11	4.13	3.11	2.65	6'S x 6'H RCB	1	383.95	0.156	0.001	0.012	27.60	276.33
NBFRN-63	JCT-1	3.12	3.76	2.00	2.26	0.26	6.30	1.70	6.20	24" RCP	1	37.72	2.971	0.030	0.012	1.48	45.44
SBFRN-60	CULV-01	0.23	1.45	0.00	1.48	0.70	7.81	3.76	3.05	24" RCP	1	16.03	1.410	0.014	0.012	7.60	31.31
BRPT-06	NBFRN-63	4.95	5.36	3.12	3.27	0.15	4.83	1.07	4.81	24" RCP	1	51.49	3.553	0.035	0.012	0.50	49.69
NB-INT-19	SBFRN-60	1.00	2.00	0.23	0.89	0.66	4.83	2.71	4.80	30" RCP	1	144.00	0.537	0.005	0.012	5.00	35.04

LINK COMPUTATIONS (10-YR)

UPSTREAM NODE ID	DOWNSTREAM NODE ID	INVERT UPSTREAM ELEVATION	HGL UPSTREAM ELEVATION	INVERT DOWNSTREAM ELEVATION	HGL DOWNSTREAM ELEVATION	UNIFORM DEPTH	UNIFORM VELOCITY	ACTUAL VELOCITY UPSTREAM	ACTUAL VELOCITY DOWNSTREAM	LIBRARY ITEM	NO. OF BARRELS	LENGTH	SLOPE	FRICTION SLOPE	MANNING'S N VALUE	DISCHARGE	CAPACITY
		FT	FT	FT	FT	FT	FPS	FPS	FPS			FT	%	%		CFS	CFS
SBFRN-19	CULV-OUT2	-1.98	1.00	-2.00	1.00	0.63	6.06	1.27	1.27	6'S x 4'H RCB	1	3.50	0.572	0.006	0.012	22.78	317.73
DCH181-A5	SBFRN-19	-1.95	1.03	-1.98	1.00	1.24	2.76	1.14	1.14	6'S x 4'H RCB	1	49.24	0.061	0.001	0.012	20.46	103.73
DCH181-A6	DCH181-A5	0.00	1.28	-1.00	1.03	0.63	5.39	2.16	1.46	24" RCP	1	133.90	0.747	0.008	0.012	4.58	22.78
NB-US181-JCT2	DCH181-A5	-1.82	1.03	-1.95	1.03	0.87	2.75	0.84	0.80	6'S x 4'H RCB	1	139.62	0.092	0.001	0.012	14.30	127.77
SBFRN-JCT2	DCH181-A6	0.80	1.49	0.00	0.45	0.45	3.51	1.94	3.51	24" RCP	1	170.01	0.465	0.005	0.012	1.86	17.98
SBFRN-20	DCH181-A6	0.80	1.45	0.00	0.33	0.33	5.58	2.09	5.51	24" RCP	1	46.48	1.721	0.017	0.012	1.86	34.59
DCH181-A7	NB-US181-JCT2	-0.80	1.24	-1.50	1.03	0.90	6.29	2.76	2.76	24" RCP	1	98.29	0.712	0.007	0.012	8.65	22.25
BENBXR-JCT1	NB-US181-JCT2	-1.76	1.04	-1.82	1.03	0.40	2.34	0.34	0.33	6'S x 4'H RCB	1	40.64	0.150	0.001	0.012	5.65	162.56
SBFRN-21	SBFRN-JCT2	1.23	1.87	0.80	1.19	0.39	4.28	2.15	4.26	24" RCP	1	50.61	0.815	0.008	0.012	1.86	23.81
BENBXR-08	BENBXR-JCT1	0.50	1.02	-0.26	1.04	0.32	3.79	1.87	0.56	24" RCP	1	90.62	0.839	0.008	0.012	1.20	24.14
NBFRN-JCT2	BENBXR-JCT1	-1.72	1.04	-1.76	1.04	0.40	1.84	0.27	0.27	6'S x 4'H RCB	1	41.33	0.097	0.001	0.012	4.44	130.73
BENBXR-09	BENBXR-08	0.96	1.32	0.50	1.02	0.29	2.11	1.52	0.90	24" RCP	1	155.35	0.295	0.003	0.012	0.58	14.32
NBFRN-19	NBFRN-JCT2	0.09	1.04	-1.72	1.04	0.59	5.76	3.04	1.42	24" RCP	1	196.26	0.924	0.009	0.012	4.44	25.35
NBFRN-20	NBFRN-19	0.18	1.10	0.09	1.04	0.82	2.04	1.75	1.69	24" RCP	1	95.35	0.090	0.001	0.012	2.48	7.92
NBFRN-JCT10	NBFRN-20	0.22	1.12	0.18	1.10	0.53	1.84	0.88	0.86	24" RCP	1	37.84	0.106	0.001	0.012	1.22	8.57
DCH181-SD1	NBFRN-JCT10	0.25	1.65	0.22	1.12	0.53	1.84	0.52	0.88	24" RCP	1	30.25	0.099	0.001	0.012	1.22	8.30

LINK COMPUTATIONS (10-YR)

UPSTREAM NODE ID	DOWNSTREAM NODE ID	INVERT UPSTREAM ELEVATION	HGL UPSTREAM ELEVATION	INVERT DOWNSTREAM ELEVATION	HGL DOWNSTREAM ELEVATION	UNIFORM DEPTH	UNIFORM VELOCITY	ACTUAL VELOCITY UPSTREAM	ACTUAL VELOCITY DOWNSTREAM	LIBRARY ITEM	NO. OF BARRELS	LENGTH	SLOPE	FRICTION SLOPE	MANNING'S N VALUE	DISCHARGE	CAPACITY
		FT	FT	FT	FT	FT	FPS	FPS	FPS			FT	%	%		CFS	CFS
DCH181-A3	CULV-OUT3	-1.96	1.02	-2.00	1.00	1.49	3.56	1.78	1.76	6'S x 4'H RCB	1	46.56	0.092	0.001	0.012	31.75	127.71
SBFRN-MH2	DCH181-A3	1.00	1.80	0.00	0.53	0.53	3.72	2.14	3.72	24" RCP	1	231.74	0.432	0.004	0.012	2.49	17.32
NBFRN-JCT6	DCH181-A3	-1.82	1.04	-1.96	1.02	1.30	3.65	1.66	1.59	6'S x 4'H RCB	1	137.31	0.102	0.001	0.012	28.45	134.19
SBFRN-10	SBFRN-MH2	1.20	1.95	1.00	1.50	0.50	4.12	2.33	4.12	24" RCP	1	34.58	0.578	0.006	0.012	2.49	20.05
NBFRN-JCT1	NBFRN-JCT6	-1.76	2.07	-1.82	1.04	1.24	3.68	1.19	1.59	6'S x 4'H RCB	1	57.31	0.105	0.001	0.012	27.29	136.07
DCH181-A1	NBFRN-JCT6	-0.10	1.55	-1.00	1.04	0.27	4.71	0.42	0.37	24" RCP	1	56.78	1.585	0.016	0.012	1.16	33.19
NBFRN-09	NBFRN-JCT1	-1.66	2.12	-1.76	2.07	1.76	3.48	2.12	2.12	36" RCP	1	102.12	0.103	0.001	0.012	14.98	24.98
NB-INT-11	NBFRN-JCT1	-1.50	2.14	-1.76	2.07	0.71	8.53	2.00	2.00	30" RCP	1	16.60	1.567	0.016	0.012	9.80	59.83
NBFRN-MH1	NBFRN-JCT1	0.58	2.10	-0.76	2.07	0.51	4.01	0.98	0.80	24" RCP	1	256.57	0.522	0.005	0.012	2.51	19.05
NBFRN-10	NBFRN-09	-0.50	2.23	-1.16	2.12	1.09	6.69	2.80	2.80	30" RCP	1	105.42	0.624	0.006	0.012	13.76	37.77
NBFRN-05	NBFRN-MH1	1.00	2.13	0.58	2.10	0.51	3.90	1.33	0.95	24" RCP	1	82.72	0.508	0.005	0.012	2.43	18.79
DCH181-A2	NBFRN-MH1	1.55	2.10	0.58	2.10	0.07	2.10	0.10	0.03	24" RCP	1	55.41	1.750	0.017	0.012	0.07	34.88
NBFRN-11	NBFRN-10	-0.36	2.43	-0.50	2.23	1.54	3.88	2.51	2.51	30" RCP	1	86.95	0.161	0.002	0.012	12.29	19.17
NB-INT-18	NBFRN-11	0.78	2.49	-0.36	2.43	0.51	13.70	2.73	2.00	30" RCP	1	19.09	5.941	0.059	0.012	9.80	116.51

LINK COMPUTATIONS (10-YR)

UPSTREAM NODE ID	DOWNSTREAM NODE ID	INVERT UPSTREAM ELEVATION	HGL UPSTREAM ELEVATION	INVERT DOWNSTREAM ELEVATION	HGL DOWNSTREAM ELEVATION	UNIFORM DEPTH	UNIFORM VELOCITY	ACTUAL VELOCITY UPSTREAM	ACTUAL VELOCITY DOWNSTREAM	LIBRARY ITEM	NO. OF BARRELS	LENGTH	SLOPE	FRICTION SLOPE	MANNING'S N VALUE	DISCHARGE	CAPACITY
		FT	FT	FT	FT	FT	FPS	FPS	FPS			FT	%	%		CFS	CFS
NBFRN-JCT3	CULV-OUT4	-1.71	2.66	-2.00	1.00	1.24	3.70	1.15	1.53	6'S x 4'H RCB	1	292.51	0.098	0.001	0.012	27.50	131.42
NB-INT-16	NBFRN-JCT3	0.92	2.66	0.30	2.66	0.22	4.94	0.31	0.29	24" RCP	1	27.48	2.257	0.023	0.012	0.90	39.60
NBFRN-MH4	NBFRN-JCT3	-1.61	2.68	-1.70	2.66	1.12	4.05	1.75	1.75	30" RCP	2	40.40	0.223	0.002	0.012	17.20	45.12
NBFRN-MH10	NBFRN-JCT3	-1.67	2.68	-1.70	2.66	1.47	3.14	1.92	1.92	30" RCP	1	31.69	0.106	0.001	0.012	9.40	15.59
NB-INT-17	NBFRN-MH4	1.63	2.68	0.71	2.68	0.18	5.82	0.48	0.26	24" RCP	2	23.04	4.000	0.040	0.012	1.60	105.45
NBFRN-MH9	NBFRN-MH4	-1.16	3.54	-1.61	2.68	1.91	3.88	3.18	3.18	30" RCP	1	313.31	0.144	0.001	0.012	15.60	18.12
NBFRN-MH11	NBFRN-MH10	-1.38	2.83	-1.67	2.68	1.47	3.14	1.92	1.92	30" RCP	1	280.32	0.101	0.001	0.012	9.40	15.22
NB-INT-09	NBFRN-MH9	-0.80	3.74	-1.16	3.54	0.69	10.80	3.31	3.31	24" RCP	1	13.20	2.728	0.027	0.012	10.40	43.55
NBFRN-MH8	NBFRN-MH9	-1.00	3.57	-1.16	3.54	0.72	4.49	1.06	1.06	30" RCP	1	37.80	0.423	0.004	0.012	5.20	31.10
NB-INT-08	NBFRN-MH11	1.35	2.84	0.76	2.83	0.20	6.22	0.40	0.32	24" RCP	1	14.65	4.000	0.040	0.012	1.00	52.73
NBFRN-MH12	NBFRN-MH11	-1.34	2.87	-1.38	2.83	1.32	3.20	1.71	1.71	30" RCP	1	37.77	0.111	0.001	0.012	8.40	15.90
NB-INT-10	NBFRN-MH8	-0.62	3.62	-1.00	3.57	0.50	8.52	1.66	1.66	24" RCP	1	15.53	2.447	0.024	0.012	5.20	41.24
NB-INT-07	NBFRN-MH12	1.61	2.87	0.99	2.87	0.20	6.22	0.48	0.33	24" RCP	1	15.54	4.000	0.040	0.012	1.00	52.73
NBFRN-MH13	NBFRN-MH12	-1.02	3.08	-1.34	2.87	1.32	2.81	1.51	1.51	30" RCP	1	311.75	0.101	0.001	0.012	7.40	15.21
NB-INT-15	NBFRN-MH13	0.84	3.08	-0.12	3.08	0.21	6.40	0.35	0.35	24" RCP	1	23.99	4.000	0.040	0.012	1.10	52.73
NBFRN-MH14	NBFRN-MH13	-0.99	3.14	-1.02	3.08	1.14	2.90	1.28	1.28	30" RCP	1	34.23	0.112	0.001	0.012	6.30	15.97
NB-INT-14	NBFRN-MH14	1.09	3.15	0.07	3.14	0.26	7.41	0.57	0.57	24" RCP	1	25.48	4.000	0.040	0.012	1.80	52.73
NBFRN-MH15	NBFRN-MH14	-0.66	3.19	-0.99	3.14	0.95	2.62	0.92	0.92	30" RCP	1	318.85	0.101	0.001	0.012	4.50	15.21
NB-INT-13	NBFRN-MH15	1.29	3.19	0.08	3.19	0.23	6.87	0.45	0.45	24" RCP	1	30.28	4.000	0.040	0.012	1.40	52.73
NBFRN-MH16	NBFRN-MH15	-0.63	3.20	-0.66	3.19	0.77	2.41	0.63	0.63	30" RCP	1	33.90	0.112	0.001	0.012	3.10	15.98
NB-INT-12	NBFRN-MH16	0.97	3.22	-0.36	3.20	0.34	8.72	0.99	0.99	24" RCP	1	33.17	4.000	0.040	0.012	3.10	52.73

PROJECT
US 181 HARBOR BRIDGE

REVIEW PHASE: ☐ Detail Check ☐ Internal Review ☐ Design Review ☐ TxDOT ☐ Drawing ☐ Report ☐ Other:

Prepared By: Date: ☐ Drawing Checked Against Calculations ☐ Calculations Check Confirmed

Checked by: Date: Back-Checked by: Date: Corrected by: Date: Verified by: Date:

Plotted: 6/9/2017 1:56:05 PM
Pen Table: HBR_Pack1A_DRN.tbl
Design File: c:\pw_online\stantec\dms97318\HBR_DRN_NORTH_HYD04.dgn

NO.	REVISIONS	BY	DATE

PRELIMINARY
FOR REVIEW ONLY
THESE DOCUMENTS ARE PRELIMINARY AND SUBJECT TO CHANGE. THEY ARE NOT INTENDED FOR CONSTRUCTION OR BIDDING. THEY WERE PREPARED BY, OR UNDER THE SUPERVISION OF:
Engineer: JACEK KWASNIEWSKI
P.E. No.: 95757
Date: 6/9/2017

RELEASE FOR CONSTRUCTION

US 181 HARBOR BRIDGE

HYDRAULIC DATA SHEET

FLATIRON/DRAGADOS LLC

Stantec
Engineered by Stantec Consulting Services Inc.
Texas Registered Engineering Firm F-6324

Texas Department of Transportation
© 2017
SHEET 4 OF 7

FED. RD. DIV. NO.	FEDERAL AID PROJECT NO.		SHEET NO.
6	HP X597(1)		DRN 004
STATE	STATE DIST. NO.	COUNTY	
TEXAS	CRP	NUECES	
CONT.	SECT	JOB	HIGHWAY NO.
0101	06	095	US181

NOTE:
THESE TABLES CONTAIN HYDRAULIC DATA FOR DRAINAGE SYSTEMS IN PACKAGES 1A AND 1B. REFER TO CORRESPONDING PACKAGE FOR PLAN & PROFILE SHEETS.

LINK COMPUTATIONS (10-YR)

UPSTREAM NODE ID	DOWNSTREAM NODE ID	INVERT UPSTREAM ELEVATION	HGL UPSTREAM ELEVATION	INVERT DOWNSTREAM ELEVATION	HGL DOWNSTREAM ELEVATION	UNIFORM DEPTH	UNIFORM VELOCITY	ACTUAL VELOCITY UPSTREAM	ACTUAL VELOCITY DOWNSTREAM	LIBRARY ITEM	NO. OF BARRELS	LENGTH	SLOPE	FRICTION SLOPE	MANNING'S N VALUE	DISCHARGE	CAPACITY
		FT	FT	FT	FT	FT	FPS	FPS	FPS			FT	%	%		CFS	CFS
SBFRN-JCT5	CULV-OUT5	-1.95	1.11	-2.00	1.00	1.11	3.05	1.11	1.13	6'S x 4'H RCB	1	68.44	0.073	0.001	0.012	20.35	113.58
DCH181-A4	SBFRN-JCT5	-0.10	1.60	-0.50	0.65	1.15	6.13	4.02	6.13	24" RCP	1	72.48	0.552	0.006	0.012	11.48	19.59
BENBXR-JCT2	SBFRN-JCT5	0.22	1.15	-1.95	1.11	0.22	4.93	1.15	0.35	6'S x 4'H RCB	1	163.23	1.329	0.013	0.012	6.40	484.45
SB-US181-MH1	SBFRN-JCT5	2.00	2.80	-0.50	-0.10	0.40	5.52	2.11	5.52	24" RCP	1	189.67	1.318	0.013	0.012	2.47	30.27
SBFRN-22	DCH181-A4	0.40	1.62	-0.10	1.60	0.38	4.31	0.90	0.63	24" RCP	1	58.15	0.860	0.009	0.012	1.80	24.45
BENBXR-12	BENBXR-JCT2	0.11	1.16	-0.50	1.15	0.46	3.79	1.23	0.73	24" RCP	1	112.73	0.541	0.005	0.012	2.04	19.38
BENBXR-13	BENBXR-JCT2	1.00	1.67	-0.50	-0.11	0.39	6.60	3.10	6.56	24" RCP	1	77.18	1.944	0.019	0.012	2.87	36.75
BENBXR-JCT3	BENBXR-JCT2	-1.76	1.15	-1.78	1.15	0.19	1.29	0.09	0.09	6'S x 4'H RCB	1	22.32	0.103	0.001	0.012	1.50	134.89
SBFRN-23	SB-US181-MH1	3.40	4.16	2.00	2.35	0.35	6.65	2.25	6.59	24" RCP	1	62.39	2.244	0.022	0.012	2.47	39.49
BENBXR-11	BENBXR-12	0.19	1.16	0.11	1.16	0.56	1.78	0.84	0.77	24" RCP	1	78.02	0.100	0.001	0.012	1.28	8.34
NB-US181-15	BENBXR-13	1.50	2.13	1.00	1.42	0.42	3.74	2.12	3.74	24" RCP	1	87.72	0.570	0.006	0.012	1.80	19.90
NBFRN-JCT4	BENBXR-JCT3	-1.73	1.15	-1.76	1.15	0.20	1.24	0.09	0.09	6'S x 4'H RCB	1	31.07	0.099	0.001	0.012	1.50	131.94
BENBXR-10	BENBXR-11	0.56	1.17	0.19	1.16	0.35	2.64	1.20	0.65	24" RCP	1	104.03	0.357	0.004	0.012	0.98	15.74
NBFRN-21	NBFRN-JCT4	0.17	1.18	-0.50	1.15	0.48	2.55	0.94	0.54	24" RCP	1	286.17	0.233	0.002	0.012	1.50	12.74
BENBXR-10A	BENBXR-10	0.66	1.19	0.56	1.17	0.28	2.23	0.90	0.73	24" RCP	1	30.21	0.331	0.003	0.012	0.59	15.17

LINK COMPUTATIONS (10-YR)

UPSTREAM NODE ID	DOWNSTREAM NODE ID	INVERT UPSTREAM ELEVATION	HGL UPSTREAM ELEVATION	INVERT DOWNSTREAM ELEVATION	HGL DOWNSTREAM ELEVATION	UNIFORM DEPTH	UNIFORM VELOCITY	ACTUAL VELOCITY UPSTREAM	ACTUAL VELOCITY DOWNSTREAM	LIBRARY ITEM	NO. OF BARRELS	LENGTH	SLOPE	FRICTION SLOPE	MANNING'S N VALUE	DISCHARGE	CAPACITY
		FT	FT	FT	FT	FT	FPS	FPS	FPS			FT	%	%		CFS	CFS
NBFRN-MH17	CULV-OUT6	-1.82	1.71	-2.00	1.00	2.48	4.54	3.19	3.75	6'S x 4'H RCB	1	180.28	0.098	0.001	0.012	67.46	131.67
NB-INT-02	NBFRN-MH17	2.81	3.92	1.59	2.06	0.43	10.04	2.79	9.01	24" RCP	1	30.45	4.000	0.040	0.012	5.00	52.73
NBFRN-MH21	NBFRN-MH17	-1.71	1.82	-1.82	1.71	1.98	4.42	2.47	2.48	6'S x 4'H RCB	1	107.00	0.104	0.001	0.012	52.46	135.35
NBFRN-MH22	NBFRN-MH17	-0.51	1.71	-1.82	1.71	0.42	3.99	0.75	0.47	6'S x 4'H RCB	1	327.95	0.400	0.004	0.012	10.00	265.90
NBFRN-61	NBFRN-MH21	0.96	1.82	0.29	1.82	0.31	7.19	1.70	0.85	24" RCP	1	21.59	3.094	0.031	0.012	2.19	46.38
NBFRN-MH20	NBFRN-MH21	-1.54	2.14	-1.71	1.82	1.98	4.23	2.28	2.37	6'S x 4'H RCB	1	173.44	0.101	0.001	0.012	50.27	133.77
NBFRN-MH23	NBFRN-MH22	-0.41	1.71	-0.51	1.71	0.62	2.69	0.79	0.75	6'S x 4'H RCB	1	90.50	0.113	0.001	0.012	10.00	141.17
NB-INT-03	NBFRN-MH20	-1.05	2.65	-1.54	2.14	1.17	11.05	5.09	5.09	30" RCP	1	31.05	1.578	0.016	0.012	25.00	60.05
NBFRN-MH19	NBFRN-MH20	-1.39	2.24	-1.54	2.14	0.93	4.54	1.16	1.15	6'S x 4'H RCB	1	71.10	0.213	0.002	0.012	25.27	194.13
NB-INT-01	NBFRN-MH23	-0.20	1.77	-0.41	1.71	0.71	4.99	1.60	1.59	24" RCP	1	35.76	0.573	0.006	0.012	5.00	19.96
NBFRN-MH24	NBFRN-MH23	-0.15	1.71	-0.41	1.71	0.40	2.07	0.45	0.39	6'S x 4'H RCB	1	242.00	0.107	0.001	0.012	5.00	137.52
NBFRN-MH18	NBFRN-MH19	-1.29	2.95	-1.39	2.24	2.05	5.86	5.15	5.15	30" RCP	1	31.15	0.315	0.003	0.012	25.27	26.84
POND-05	NBFRN-MH24	1.00	1.72	-0.15	1.71	0.22	3.85	1.15	0.45	6'S x 4'H RCB	1	140.28	0.817	0.008	0.012	5.00	379.83
NB-INT-04	NBFRN-MH18	-1.00	3.28	-1.29	2.95	1.91	3.15	2.57	2.57	30" RCP	2	282.26	0.103	0.001	0.012	25.27	30.64

LINK COMPUTATIONS (10-YR)

UPSTREAM NODE ID	DOWNSTREAM NODE ID	INVERT UPSTREAM ELEVATION	HGL UPSTREAM ELEVATION	INVERT DOWNSTREAM ELEVATION	HGL DOWNSTREAM ELEVATION	UNIFORM DEPTH	UNIFORM VELOCITY	ACTUAL VELOCITY UPSTREAM	ACTUAL VELOCITY DOWNSTREAM	LIBRARY ITEM	NO. OF BARRELS	LENGTH	SLOPE	FRICTION SLOPE	MANNING'S N VALUE	DISCHARGE	CAPACITY
		FT	FT	FT	FT	FT	FPS	FPS	FPS			FT	%	%		CFS	CFS
SBFRN-JCT8	SBFRN-OUT5	-1.95	1.07	-2.00	1.00	1.00	10.16	3.37	3.39	6'S x 4'H RCB	1	5.07	0.986	0.010	0.012	61.08	417.27
SBFRN-JCT4	SBFRN-JCT8	-1.75	1.15	-1.95	1.07	1.33	7.14	3.28	3.14	6'S x 4'H RCB	1	53.68	0.373	0.004	0.012	56.95	256.50
SBFRN-30	SBFRN-JCT8	0.84	1.80	-0.50	-0.03	0.44	9.83	3.41	9.04	24" RCP	1	35.98	3.724	0.037	0.012	5.09	50.88
DCH181-A10	SBFRN-JCT4	1.82	3.08	-0.30	0.40	0.70	6.85	3.23	6.85	24" RCP	1	196.70	1.078	0.011	0.012	6.77	27.37
SBFRN-JCT7	SBFRN-JCT4	-1.45	1.24	-1.75	1.15	1.25	6.84	3.18	2.96	6'S x 4'H RCB	1	83.83	0.358	0.004	0.012	51.40	251.39
SBFRN-31	SBFRN-30	1.20	1.85	0.84	1.80	0.41	3.04	1.58	0.93	24" RCP	1	92.48	0.389	0.004	0.012	1.39	16.45
SBFRN-MH10	DCH181-A10	2.50	4.00	1.82	2.56	0.74	6.00	2.49	5.98	24" RCP	1	85.86	0.792	0.008	0.012	6.31	23.46
P21-END	SBFRN-JCT7	-1.00	1.31	-1.45	1.24	0.73	3.83	1.27	1.27	24" RCP	1	135.07	0.333	0.003	0.012	4.00	15.22
P22-END	SBFRN-JCT7	-1.00	1.30	-1.45	1.24	0.70	4.11	1.27	1.27	24" RCP	1	113.24	0.397	0.004	0.012	4.00	16.62
NBFRN-JCT8	SBFRN-JCT7	-1.20	1.44	-1.45	1.24	1.24	5.86	2.75	2.69	6'S x 4'H RCB	1	94.02	0.266	0.003	0.012	43.51	216.69
SBFRN-MH9	SBFRN-MH10	3.50	4.51	2.50	3.11	0.61	5.34	2.72	5.31	24" RCP	1	131.79	0.759	0.008	0.012	4.32	22.96
SB-US181-20	SBFRN-MH10	4.00	4.85	2.50	2.75	0.23	9.69	1.57	9.02	24" RCP	1	19.03	7.883	0.079	0.012	1.99	74.02
NBFRN-JCT5	NBFRN-JCT8	-1.02	1.48	-1.20	1.44	0.87	7.36	2.54	2.42	6'S x 4'H RCB	1	30.01	0.600	0.006	0.012	38.23	325.45
NB-US181-MH1	NBFRN-JCT8	-0.75	1.76	-1.20	1.44	1.29	3.23	2.20	2.20	24" RCP	1	304.38	0.148	0.001	0.012	6.92	10.14
SBFRN-MH13	SBFRN-MH9	4.50	5.38	3.50	4.00	0.50	4.89	2.25	4.88	24" RCP	1	124.76	0.802	0.008	0.012	2.99	23.60
SB-US181-19	SBFRN-MH9	4.20	4.81	3.50	3.74	0.23	6.71	1.64	6.37	24" RCP	1	17.91	3.909	0.039	0.012	1.32	52.12
NBFRN-31	NBFRN-JCT5	-0.18	1.72	-1.02	1.48	1.03	3.18	1.67	1.64	24" RCP	1	525.50	0.159	0.002	0.012	5.16	10.52
NBFRN-JCT7	NBFRN-JCT5	-1.00	1.60	-1.02	1.48	0.90	6.14	2.12	2.20	6'S x 4'H RCB	1	4.90	0.408	0.004	0.012	33.07	268.37
NB-US181-18	NB-US181-MH1	0.50	1.76	-0.75	1.76	0.29	7.23	0.95	0.63	24" RCP	1	36.62	3.413	0.034	0.012	1.99	48.71
NB-US181-MH2	NB-US181-MH1	-0.60	1.87	-0.75	1.76	1.29	2.50	1.70	1.70	24" RCP	1	169.52	0.088	0.001	0.012	5.35	7.84
SB-US181-18	SBFRN-MH13	6.00	7.15	4.50	4.79	0.26	12.62	1.61	10.67	24" RCP	1	12.69	11.821	0.118	0.012	2.99	90.64
NBFRN-30	NBFRN-31	-0.11	1.74	-0.18	1.72	0.88	2.36	1.04	1.02	24" RCP	1	75.00	0.101	0.001	0.012	3.14	8.37
NBFRN-40	NBFRN-JCT7	0.80	1.60	0.50	1.60	0.55	4.37	2.61	1.74	24" RCP	1	52.63	0.570	0.006	0.012	3.07	19.90
DCH181-A8	NB-US181-MH2	-0.45	1.96	-0.60	1.87	0.87	3.29	1.36	1.36	24" RCP	1	73.81	0.203	0.002	0.012	4.28	11.88
NB-US181-17	NB-US181-MH2	0.50	1.87	-0.60	1.87	0.23	6.05	0.54	0.39	24" RCP	1	35.76	3.076	0.031	0.012	1.24	46.23
SB-US181-17	SB-US181-18	8.00	8.67	6.00	6.32	0.32	5.26	1.86	5.26	24" RCP	1	127.97	1.563	0.016	0.012	1.73	32.96
NBFRN-29	NBFRN-30	0.20	1.75	-0.11	1.74	0.52	3.43	0.85	0.74	24" RCP	1	80.00	0.383	0.004	0.012	2.23	16.31
NBFRN-41	NBFRN-40	1.00	1.65	0.80	1.60	0.40	3.69	1.88	1.43	24" RCP	1	33.78	0.592	0.006	0.012	1.67	20.29
NB-US181-MH3	DCH181-A8	0.00	1.98	-0.45	1.96	0.55	3.02	0.68	0.68	24" RCP	1	163.80	0.275	0.003	0.012	2.12	13.82
DCH181-A9	SB-US181-17	10.85	11.61	8.00	8.06	0.06	7.77	0.18	7.77	24" RCP	1	8.97	31.784	0.318	0.012	0.20	148.63
NB-US181-16	NB-US181-MH3	0.50	1.99	0.00	1.98	0.36	5.52	0.85	0.68	24" RCP	1	33.30	1.501	0.015	0.012	2.12	32.30

NO.	REVISIONS	BY	DATE

PRELIMINARY
FOR REVIEW ONLY
THESE DOCUMENTS ARE PRELIMINARY AND SUBJECT TO CHANGE. THEY ARE NOT INTENDED FOR CONSTRUCTION OR BIDDING. THEY WERE PREPARED BY, OR UNDER THE SUPERVISION OF:
Engineer: JACEK KWASNIEWSKI
P.E. No.: 95757
Date: 6/9/2017

RELEASE FOR CONSTRUCTION

US 181 HARBOR BRIDGE

HYDRAULIC DATA SHEET

FLATIRON/DRAGADOS LLC

Stantec
Engineered by Stantec Consulting Services Inc.
Texas Registered Engineering Firm F-6324

Texas Department of Transportation
© 2017
SHEET 5 OF 7

FED. RD. DIV. NO.	FEDERAL AID PROJECT NO.		SHEET NO.
6	HP X597(1)		DRN 005
STATE	STATE DIST. NO.	COUNTY	
TEXAS	CRP	NUECES	
CONT.	SECT	JOB	HIGHWAY NO.
0101	06	095	US181

PROJECT
US 181 HARBOR BRIDGE

Checked by: Date:
Back-Checked by: Date:
Corrected by: Date:
Verified by: Date:

☐ Detail Check ☐ Internal Review ☐ Design Review ☐ TxDOT
☐ Drawing ☐ Report ☐ Other: ____
Prepared By: ____ Date:
☐ Drawing Checked Against Calculations ☐ Calculations Check Confirmed
REVIEW PHASE

Plotted: 6/9/2017 1:56:14 PM
Pen Table: HBR_Pack1A_DRN.tbl
Design File: c:\pw_online\stantec\dms97318\HBR_DRN_NORTH_HY005.dgn

NOTE:
THESE TABLES CONTAIN HYDRAULIC DATA FOR DRAINAGE SYSTEMS IN PACKAGES 1A AND 1B. REFER TO CORRESPONDING PACKAGE FOR PLAN & PROFILE SHEETS.

LINK COMPUTATIONS (10-YR)

UPSTREAM NODE ID	DOWNSTREAM NODE ID	INVERT UPSTREAM ELEVATION	HGL UPSTREAM ELEVATION	INVERT DOWNSTREAM ELEVATION	HGL DOWNSTREAM ELEVATION	UNIFORM DEPTH	UNIFORM VELOCITY	ACTUAL VELOCITY UPSTREAM	ACTUAL VELOCITY DOWNSTREAM	LIBRARY ITEM	NO. OF BARRELS	LENGTH	SLOPE	FRICTION SLOPE	MANNING'S N VALUE	DISCHARGE	CAPACITY
		FT	FT	FT	FT	FT	FPS	FPS	FPS			FT	%	%		CFS	CFS
SBFRN-51	SBFRN-OUT2	1.75	2.48	1.00	1.40	0.40	5.33	2.30	5.29	24" RCP	1	60.75	1.231	0.012	0.012	2.40	29.25
SBFRN-50	SBFRN-OUT3	1.15	1.79	1.00	1.46	0.53	2.72	2.07	3.25	24" RCP	1	60.86	0.241	0.002	0.012	1.80	12.95
SBFRN-40	SBFRN-OUT4	0.62	1.51	0.00	0.53	0.53	5.23	2.58	5.20	24" RCP	1	72.77	0.850	0.009	0.012	3.50	24.30
NBFRN-62	NBFRN-OUT1	1.65	2.08	1.00	1.22	0.22	4.57	1.70	4.55	24" RCP	1	33.73	1.939	0.019	0.012	0.84	36.71
NBFRN-60	NBFRN-OUT3	1.20	1.95	1.00	1.56	0.57	3.42	2.34	3.57	24" RCP	1	57.92	0.340	0.003	0.012	2.54	15.37
NBFRN-50	NBFRN-OUT4	0.74	1.73	0.00	0.58	0.57	5.59	2.69	5.57	24" RCP	1	82.69	0.896	0.009	0.012	4.17	24.95
NB-INT-20	NBFRN-OUT5	-0.70	1.03	-1.00	1.00	0.66	4.83	1.38	1.19	30" RCP	1	54.92	0.546	0.005	0.012	5.00	35.33
POND-01	POND-OUT1	-1.00	1.06	-2.00	1.00	0.59	8.45	2.43	1.67	6'S x 6'H RCB	1	83.83	1.193	0.012	0.012	30.00	763.47
POND-02	POND-OUT2	-1.00	1.06	-2.00	1.00	0.60	8.33	2.43	1.67	6'S x 6'H RCB	1	87.98	1.137	0.011	0.012	30.00	745.23
POND-04	POND-OUT4	-1.00	1.01	-2.00	1.00	0.30	5.49	0.83	0.56	6'S x 4'H RCB	1	90.55	1.104	0.011	0.012	10.00	441.63

LINK COMPUTATIONS (10-YR)

UPSTREAM NODE ID	DOWNSTREAM NODE ID	INVERT UPSTREAM ELEVATION	HGL UPSTREAM ELEVATION	INVERT DOWNSTREAM ELEVATION	HGL DOWNSTREAM ELEVATION	UNIFORM DEPTH	UNIFORM VELOCITY	ACTUAL VELOCITY UPSTREAM	ACTUAL VELOCITY DOWNSTREAM	LIBRARY ITEM	NO. OF BARRELS	LENGTH	SLOPE	FRICTION SLOPE	MANNING'S N VALUE	DISCHARGE	CAPACITY
		FT	FT	FT	FT	FT	FPS	FPS	FPS			FT	%	%		CFS	CFS
BURL-MH1	BURL-OUT1	-1.85	1.06	-2.00	1.00	2.10	4.54	3.28	3.18	6'S x 4'H RCB	1	150.44	0.100	0.001	0.012	57.29	132.89
BURL-MH6	BURL-MH1	-1.64	2.87	-1.85	1.06	2.10	4.54	2.39	3.28	6'S x 4'H RCB	1	214.64	0.100	0.001	0.012	57.29	132.89
BURL-MH8	BURL-MH6	0.00	3.73	-1.64	2.87	0.84	11.94	2.72	2.72	36" RCP	1	66.86	2.450	0.025	0.012	19.22	121.66
BURL-MH10	BURL-MH6	-1.20	3.25	-1.64	2.87	1.28	6.93	2.81	2.81	36" RCP	1	81.87	0.535	0.005	0.012	19.85	56.85
BURL-EB-02	BURL-MH6	-1.43	2.91	-1.64	2.87	1.32	3.04	1.29	1.29	36" RCP	2	202.78	0.101	0.001	0.012	18.22	49.43
NB-INT-05	BURL-MH8	0.50	4.28	0.00	3.73	1.72	5.08	3.73	3.73	30" RCP	1	196.34	0.255	0.003	0.012	18.32	24.12
BURL-INT-04	BURL-MH8	0.12	3.73	0.00	3.73	0.31	2.93	0.29	0.29	24" RCP	1	23.26	0.516	0.005	0.012	0.90	18.93
BURL-MH4	BURL-MH10	-1.10	3.36	-1.20	3.25	1.23	4.04	1.56	1.56	36" RCP	1	56.46	0.177	0.002	0.012	11.05	32.71
NB-INT-06	BURL-MH10	1.00	3.29	-1.20	3.25	0.56	5.43	0.93	0.90	30" RCP	1	260.59	0.844	0.008	0.012	4.40	43.92
BURL-MH2	BURL-EB-02	-0.33	2.99	-1.43	2.91	0.59	9.05	1.62	1.62	30" RCP	2	50.53	2.181	0.022	0.012	15.88	141.18
BURL-MH3	BURL-MH4	-0.90	3.91	-1.10	3.36	0.92	3.58	0.94	0.94	36" RCP	1	106.02	0.189	0.002	0.012	6.63	33.76
BURL-INT-03	BURL-MH4	0.00	3.40	-0.10	3.36	0.68	4.67	1.41	1.41	24" RCP	1	19.63	0.509	0.005	0.012	4.42	18.82
BURL-INT-01	BURL-MH2	0.00	3.27	-0.33	2.99	1.36	5.84	3.24	3.24	30" RCP	1	85.76	0.386	0.004	0.012	15.88	29.70
BURL-WB-02	BURL-MH3	-0.70	3.91	-0.90	3.91	0.47	3.98	0.52	0.52	30" RCP	1	36.07	0.563	0.006	0.012	2.53	35.86
BURL-INT-02	BURL-MH3	-0.80	3.94	-0.90	3.91	0.57	5.53	1.31	1.31	24" RCP	1	11.43	0.875	0.009	0.012	4.10	24.66
BURL-WB-03	BURL-OUT2	0.04	1.03	0.00	1.00	0.59	2.06	1.02	1.01	24" RCP	1	35.83	0.111	0.001	0.012	1.59	8.77
BURL-EB-03	BURL-WB-03	0.13	1.04	0.04	1.03	0.36	2.34	0.65	0.59	24" RCP	1	32.00	0.268	0.003	0.012	0.91	13.66

LINK COMPUTATIONS (10-YR)

UPSTREAM NODE ID	DOWNSTREAM NODE ID	INVERT UPSTREAM ELEVATION	HGL UPSTREAM ELEVATION	INVERT DOWNSTREAM ELEVATION	HGL DOWNSTREAM ELEVATION	UNIFORM DEPTH	UNIFORM VELOCITY	ACTUAL VELOCITY UPSTREAM	ACTUAL VELOCITY DOWNSTREAM	LIBRARY ITEM	NO. OF BARRELS	LENGTH	SLOPE	FRICTION SLOPE	MANNING'S N VALUE	DISCHARGE	CAPACITY
		FT	FT	FT	FT	FT	FPS	FPS	FPS			FT	%	%		CFS	CFS
BRPT-04	BRPT-OUT1	-0.90	1.50	-1.00	1.00	0.46	1.78	0.23	0.26	30" RCP	1	83.36	0.118	0.001	0.012	1.10	16.40
BRPT-03	BRPT-04	-0.36	1.51	-0.90	1.50	0.19	4.03	0.20	0.19	24" RCP	1	29.95	1.797	0.018	0.012	0.60	35.34
BRPT-05	BRPT-04	0.55	1.50	-0.90	1.50	0.10	4.08	0.17	0.08	24" RCP	1	36.39	4.000	0.040	0.012	0.25	52.73
BRPT-02	BRPT-03	-0.34	1.51	-0.36	1.51	0.29	1.25	0.12	0.12	24" RCP	1	27.01	0.100	0.001	0.012	0.36	8.34
BRPT-01	BRPT-02	-0.33	1.51	-0.34	1.51	0.21	1.01	0.06	0.06	24" RCP	1	7.01	0.100	0.001	0.012	0.17	8.34

CULV-OUT3 SYSTEM - DITCH ANALYSIS (10 YR)

DITCH ID	POINT OF ANALYSIS: NODE STATION UPSTREAM	POINT OF ANALYSIS: NODE STATION DOWNSTREAM	SLOPE	NODE INVERT UPSTREAM	NODE INVERT DOWNSTREAM	ACTUAL DETPH UPSTREAM	ACTUAL DETPH DOWNSTREAM	ACTUAL VELOCITY UPSTREAM	ACTUAL VELOCITY DOWNSTREAM	MANNING'S N VALUE	DISCHARGE	CAPACITY
			%	FT	FT	FT	FT	FT/S	FT/S		CFS	CFS
DCH181NR0	1020+70.38	1020+36.20	0.217	3.93	3.86	0.39	0.23	0.73	2.08	0.033	0.45	15.29
DCH181NR0	1019+99.16	1020+36.20	0.228	3.94	3.86	0.36	0.21	0.67	1.97	0.033	0.35	15.67
DCH181NL0	1021+54.32	1021+02.82	0.220	3.51	3.40	0.54	0.33	0.88	2.32	0.033	1.02	15.38
DCH181NL0	1020+59.09	1021+02.82	1.757	4.13	3.40	0.19	0.09	0.62	2.55	0.033	0.09	43.46

CULV-OUT2 SYSTEM - DITCH ANALYSIS (10 YR)

DITCH ID	POINT OF ANALYSIS: NODE STATION UPSTREAM	POINT OF ANALYSIS: NODE STATION DOWNSTREAM	SLOPE	NODE INVERT UPSTREAM	NODE INVERT DOWNSTREAM	ACTUAL DETPH UPSTREAM	ACTUAL DETPH DOWNSTREAM	ACTUAL VELOCITY UPSTREAM	ACTUAL VELOCITY DOWNSTREAM	MANNING'S N VALUE	DISCHARGE	CAPACITY
			%	FT	FT	FT	FT	FT/S	FT/S		CFS	CFS
DCH181NR1	1027+35.08	1027+58.26	1.642	5.73	5.39	0.49	0.32	1.53	3.63	0.015	1.48	199.03
DCH181NR1	1027+99.28	1028+98.95	0.133	4.98	4.85	0.52	0.30	0.69	2.16	0.033	0.75	25.76
DCH181NL1	1027+85.36	1028+59.41	0.301	2.89	2.67	0.71	0.46	1.16	2.72	0.033	2.31	38.75
DCH181NL1	1029+20.42	1028+59.41	0.200	2.79	2.67	1.02	0.69	1.51	3.32	0.033	6.24	31.57
DCH181NL1	1031+74.44	1029+20.42	0.200	3.30	2.79	0.87	1.02	1.09	0.79	0.033	3.26	31.58
DCH181NL1	1032+23.85	1031+74.44	0.334	3.47	3.30	0.83	0.87	1.18	1.09	0.033	3.26	40.80
DCH181NL2	1030+44.84	1031+00.00	0.374	3.96	3.79	0.32	0.23	1.03	1.97	0.015	0.43	44.13
DCH181NL2	1031+70.03	1031+00.00	0.295	3.97	3.79	0.40	0.29	1.18	2.19	0.015	0.74	39.17

NO.	REVISIONS	BY	DATE

PRELIMINARY
FOR REVIEW ONLY
THESE DOCUMENTS ARE PRELIMINARY AND SUBJECT TO CHANGE. THEY ARE NOT INTENDED FOR CONSTRUCTION OR BIDDING. THEY WERE PREPARED BY, OR UNDER THE SUPERVISION OF:
Engineer: JACEK KWASNIEWSKI
P.E. No.: 95757
Date: 6/9/2017

RELEASE FOR CONSTRUCTION

US 181 HARBOR BRIDGE

HYDRAULIC DATA SHEET

FLATIRON/DRAGADOS LLC

Stantec
Engineered by Stantec Consulting Services Inc.
Texas Registered Engineering Firm F-6324

Texas Department of Transportation
© 2017
SHEET 6 OF 7

FED. RD. DIV. NO.	FEDERAL AID PROJECT NO.		SHEET NO.
6	HP X597(1)		DRN 006
STATE	STATE DIST. NO.	COUNTY	
TEXAS	CRP	NUECES	
CONT.	SECT	JOB	HIGHWAY NO.
0101	06	095	US181

PROJECT: US 181 HARBOR BRIDGE

REVIEW PHASE: ☐ Detail Check ☐ Internal Review ☐ Design Review ☐ TxDOT ☐ Drawing ☐ Report ☐ Other:

Prepared By: Date: ☐ Drawing Checked Against Calculations ☐ Calculations Check Confirmed

Checked by: Date: Back-Checked by: Date: Corrected by: Date: Verified by: Date:

Plotted: 6/9/2017 1:57:04 PM
Pen Table: HBR_Pack1A_DRN.tbl
Design File: c:\pw_online\stantec\dms97318\HBR_DRN_NORTH_HY006.dgn

NOTE:
THESE TABLES CONTAIN HYDRAULIC DATA FOR DRAINAGE SYSTEMS IN PACKAGES 1A AND 1B. REFER TO CORRESPONDING PACKAGE FOR PLAN & PROFILE SHEETS.

CULV-OUT5 SYSTEM - DITCH ANALYSIS (10 YR)

DITCH ID	POINT OF ANALYSIS		SLOPE	NODE INVERT	NODE INVERT	ACTUAL DETPH	ACTUAL DETPH	ACTUAL VELOCITY	ACTUAL VELOCITY	MANNING'S N VALUE	DISCHARGE	CAPACITY
	NODE STATION UPSTREAM	NODE STATION DOWNSTREAM		UPSTREAM	DOWNSTREAM	UPSTREAM	DOWNSTREAM	UPSTREAM	DOWNSTREAM			
			%	FT	FT	FT	FT	FT/S	FT/S		CFS	CFS
DCH181NR1	1034+47.99	1034+00.00	0.291	3.52	3.39	0.86	0.60	1.49	3.10	0.033	4.39	38.11
DCH181NR1	1033+50.00	1034+00.00	0.490	3.63	3.39	0.87	0.64	1.72	3.21	0.033	5.24	49.40
DCH181NR1	1035+22.96	1034+47.99	0.587	3.96	3.52	0.71	0.86	1.59	1.10	0.033	3.23	54.09
DCH181NR1	1031+86.65	1033+50.00	0.448	4.36	3.63	0.72	0.87	1.48	1.00	0.033	3.05	47.27
DCH181NR1	1036+02.27	1035+22.96	1.300	5.00	3.96	0.48	0.71	1.92	0.88	0.033	1.79	80.50
DCH181NR1	1031+14.34	1031+86.65	0.199	4.50	4.36	0.81	0.72	1.17	1.48	0.033	3.05	31.51
DCH181NR1	1037+03.20	1036+02.27	2.028	7.04	5.00	0.52	0.48	1.63	1.92	0.033	1.79	100.55
DCH181NR1	1029+54.79	1031+14.34	0.201	4.82	4.50	0.58	0.81	0.67	0.35	0.033	0.91	31.62
DCH181NR1	1029+04.93	1029+54.79	0.201	4.92	4.82	0.56	0.58	0.72	0.67	0.033	0.91	31.62

SBFRN-OUT5 SYSTEM - DITCH ANALYSIS (10 YR)

DITCH ID	POINT OF ANALYSIS		SLOPE	NODE INVERT	NODE INVERT	ACTUAL DETPH	ACTUAL DETPH	ACTUAL VELOCITY	ACTUAL VELOCITY	MANNING'S N VALUE	DISCHARGE	CAPACITY
	NODE STATION UPSTREAM	NODE STATION DOWNSTREAM		UPSTREAM	DOWNSTREAM	UPSTREAM	DOWNSTREAM	UPSTREAM	DOWNSTREAM			
			%	FT	FT	FT	FT	FT/S	FT/S		CFS	CFS
DCH181NR2	1039+04.51	1038+70.86	1.129	11.23	10.85	0.38	0.76	0.25	0.06	0.015	0.15	76.65
DCH181NR2	1042+44.90	1043+15.08	1.673	8.92	7.75	0.30	0.36	1.16	0.81	0.033	0.41	42.41
DCH181NR2	1043+15.08	1043+58.77	4.673	7.75	5.82	0.36	0.22	0.81	2.17	0.033	0.41	70.87
DCH181NL2	1042+11.55	1041+51.02	0.301	3.69	3.50	0.42	0.41	0.79	0.82	0.033	0.55	17.98
DCH181NL2	1041+51.02	1040+39.68	0.300	3.50	3.17	0.41	0.51	0.82	0.53	0.033	0.55	17.96
DCH181NL2	1040+39.68	1040+00.00	0.316	3.17	3.05	0.51	0.34	1.01	2.32	0.033	1.04	18.42
DCH181NL2	1035+61.87	1036+07.24	0.249	4.15	4.03	0.39	0.38	0.71	0.74	0.033	0.43	16.36
DCH181NL2	1036+07.24	1039+54.41	0.250	4.03	3.16	0.38	0.57	0.74	0.33	0.033	0.43	16.39
DCH181NL2	1039+54.41	1040+00.00	0.262	3.16	3.05	0.57	0.37	1.03	2.43	0.033	1.33	16.77

NO.	REVISIONS	BY	DATE

PRELIMINARY
FOR REVIEW ONLY
THESE DOCUMENTS ARE PRELIMINARY AND SUBJECT TO CHANGE. THEY ARE NOT INTENDED FOR CONSTRUCTION OR BIDDING. THEY WERE PREPARED BY, OR UNDER THE SUPERVISION OF:
Engineer: JACEK KWASNIEWSKI
P.E. No.: 95757
Date: 6/9/2017

RELEASE FOR CONSTRUCTION

US 181 HARBOR BRIDGE

HYDRAULIC DATA SHEET

FLATIRON/DRAGADOS LLC

Stantec
Engineered by Stantec Consulting Services Inc.
Texas Registered Engineering Firm F-6324

Texas Department of Transportation
© 2017

SHEET 7 OF 7

FED. RD. DIV. NO.	FEDERAL AID PROJECT NO.		SHEET NO.
6	HP X597(1)		DRN 007
STATE	STATE DIST. NO.	COUNTY	
TEXAS	CRP	NUECES	
CONT.	SECT	JOB	HIGHWAY NO.
0101	06	095	US181

PROJECT
US 181 HARBOR BRIDGE

Checked by: Date:
Back-Checked by: Date:
Corrected by: Date:
Verified by: Date:

☐ Detail Check ☐ Internal Review ☐ Design Review ☐ TxDOT
☐ Drawing ☐ Report ☐ Other:
Prepared By: Date:
☐ Drawing Checked Against Calculations ☐ Calculations Check Confirmed
REVIEW PHASE

Plotted: 6/9/2017 1:57:14 PM
Pen Table: HBR_Pack1A_DRN.tbl
Design File: c:\pw_online\stantec\ams97318\HBR_DRN_NORTH_HYDOT.dgn

NOTE:
THESE TABLES CONTAIN HYDRAULIC DATA FOR THE US181 BRIDGE PORTION IN PACKAGE 1A.

DRAINAGE AREA COMPUTATIONS (10-YR)

ID	RUNOFF COEFFICIENT	DRAINAGE AREA	TIME OF CONC.	TIME USED	INTENSITY	DISCHARGE
		AC	MIN	MIN	IN/HR	CFS
NB-SUP-BD04	0.9	0.19	1.6	10	7.19	1.2
NB-SUP-BD08	0.9	0.19	1.6	10	7.19	1.24
NB-SUP-BD12	0.9	0.19	1.6	10	7.19	1.23
NB-SUP-BD16	0.9	0.18	1.6	10	7.19	1.18
NB-SUP-BD20	0.9	0.18	1.6	10	7.19	1.14
NB-SUP-BD23	0.9	0.32	1.6	10	7.19	2.08
NB-SUP-BD30	0.9	0.3	10	10	7.19	1.92
NB-US181-BD01	0.9	0.22	1.6	10	7.19	1.42
NB-US181-BD02	0.9	0.23	1.6	10	7.19	1.47
NB-US181-BD03	0.9	0.24	1.6	10	7.19	1.58
NB-US181-BD04	0.9	0.21	1.6	10	7.19	1.36
NB-US181-BD05	0.9	0.24	1.7	10	7.19	1.53
NB-US181-BD06	0.9	0.27	1.6	10	7.19	1.75
NB-US181-BD07	0.9	0.21	1.7	10	7.19	1.37
NB-US181-BD08	0.9	0.24	1.7	10	7.19	1.55
NB-US181-BD09	0.9	0.24	1.7	10	7.19	1.58
NB-US181-BD10	0.9	0.23	1.7	10	7.19	1.51
NB-US181-BD11	0.9	0.26	1.9	10	7.19	1.7
NB-US181-BD12	0.9	0.23	1.8	10	7.19	1.49
NB-US181-BD13	0.9	0.23	1.9	10	7.19	1.51
NB-US181-BD14	0.9	0.23	1.8	10	7.19	1.52
NB-US181-BD15	0.9	0.24	1.9	10	7.19	1.54
NB-US181-BD16	0.9	0.26	1.9	10	7.19	1.67
NB-US181-BD17	0.9	0.22	1.8	10	7.19	1.45
NB-US181-BD18	0.9	0.24	1.8	10	7.19	1.53
NB-US181-BD19	0.9	0.2	1.9	10	7.19	1.28
NB-US181-BD20	0.9	0.34	1.7	10	7.19	2.19
NB-US181-BD21	0.9	0.35	1.7	10	7.19	2.26
NB-US181-BD22	0.9	0.32	1.7	10	7.19	2.04
NB-US181-BD23	0.9	0.33	1.9	10	7.19	2.1
NB-US181-BD24	0.9	0.4	2.1	10	7.19	2.58
NB-US181-BD25	0.9	0.43	2.4	10	7.19	2.75
NB-US181-BD26	0.9	0.5	4.2	10	7.19	3.24

DRAINAGE AREA COMPUTATIONS (10-YR)

ID	RUNOFF COEFFICIENT	DRAINAGE AREA	TIME OF CONC.	TIME USED	INTENSITY	DISCHARGE
		AC	MIN	MIN	IN/HR	CFS
SB-US181-BD01	0.9	0.27	1.9	10	7.19	1.75
SB-US181-BD02	0.9	0.28	1.8	10	7.19	1.79
SB-US181-BD03	0.9	0.31	1.9	10	7.19	2.03
SB-US181-BD04	0.9	0.24	1.9	10	7.19	1.56
SB-US181-BD05	0.9	0.27	1.9	10	7.19	1.78
SB-US181-BD06	0.9	0.29	1.7	10	7.19	1.9
SB-US181-BD07	0.9	0.22	2	10	7.19	1.44
SB-US181-BD08	0.9	0.24	1.8	10	7.19	1.56
SB-US181-BD09	0.9	0.24	1.9	10	7.19	1.58
SB-US181-BD10	0.9	0.24	1.8	10	7.19	1.54
SB-US181-BD11	0.9	0.27	1.9	10	7.19	1.72
SB-US181-BD12	0.9	0.23	1.8	10	7.19	1.49
SB-US181-BD13	0.9	0.23	1.8	10	7.19	1.49
SB-US181-BD14	0.9	0.24	1.8	10	7.19	1.58
SB-US181-BD15	0.9	0.24	1.9	10	7.19	1.55
SB-US181-BD16	0.9	0.27	1.8	10	7.19	1.74
SB-US181-BD17	0.9	0.21	1.7	10	7.19	1.36
SB-US181-BD18	0.9	0.23	1.8	10	7.19	1.5
SB-US181-BD19	0.9	0.26	1.9	10	7.19	1.65
SB-US181-BD20	0.9	0.32	2.1	10	7.19	2.05
SB-US181-BD21	0.9	0.39	2.5	10	7.19	2.52
SB-US181-BD22	0.9	0.36	3.8	10	7.19	2.31
SB-US181-BD23	0.9	0.37	2.1	10	7.19	2.39
SB-US181-BD24	0.9	0.45	2.1	10	7.19	2.9
SB-US181-BD25	0.9	0.48	2.1	10	7.19	3.11
SB-US181-BD26	0.9	0.56	2.1	10	7.19	3.65

PROJECT
US 181
HARBOR BRIDGE

Checked by: Date:
Back-Checked by: Date:
Corrected by: Date:
Verified by: Date:

Calculations Check Confirmed
Drawing Checked Against Calculations
Prepared By: Date:

☐ Detail Check ☐ Internal Review ☐ Design Review ☐ TxDOT
☐ Drawing ☐ Report ☐ Other:

REVIEW PHASE

Plotted: 6/9/2017 1:57:39 PM
Pen Table: HBR_Pack1A_DRN.tbl
Design File: c:\pw_online\stantec\dms97318\HBR_DRN_BRIDGE_HYD01.dgn

NO.	REVISIONS	BY	DATE

PRELIMINARY
FOR REVIEW ONLY
THESE DOCUMENTS ARE PRELIMINARY AND SUBJECT TO CHANGE. THEY ARE NOT INTENDED FOR CONSTRUCTION OR BIDDING. THEY WERE PREPARED BY, OR UNDER THE SUPERVISION OF:
Engineer: JACEK KWASNIEWSKI
P.E. No.: 95757
Date: 6/9/2017

RELEASE FOR CONSTRUCTION

US 181 HARBOR BRIDGE

HYDRAULIC DATA SHEET

FLATIRON/DRAGADOS LLC

Stantec
Engineered by Stantec Consulting Services Inc.
Texas Registered Engineering Firm F-6324

Texas Department of Transportation
© 2017
SHEET 1 OF 2

FED. RD. DIV. NO.	FEDERAL AID PROJECT NO.		SHEET NO.
6	HP X597(1)		DRN 008
STATE	STATE DIST. NO.	COUNTY	
TEXAS	CRP	NUECES	
CONT.	SECT	JOB	HIGHWAY NO.
0101	06	095	US181

NOTE:
THESE TABLES CONTAIN HYDRAULIC DATA FOR THE US181 BRIDGE PORTION IN PACKAGE 1A.

INLET COMPUTATIONS (10-YR)

ID	PROFILE TYPE	TYPE	LIBRARY ITEM DESCRIPTION	DISCHARGE	BYPASS FLOW	CAPACITY	BYPASS NODE ID	CURB DEPRESSION	CURB LENGTH	GRATE LENGTH	GRATE WIDTH	GRATE AREA	COMPUTED PONDED WIDTH	MAX PONDED WITDH	COMPUTED PONDED DEPTH	MAX PONDED DEPTH
				CFS	CFS	CFS		FT	FT	FT	FT	SF	FT	FT	FT	FT
NB-SUP-BD04	On Grade	Grate	Bridge Drain (Cast)	1.27	0.07	1.21		n/a	n/a	1.14	3.44	3.9	5.18	10	0.13	0.5
NB-SUP-BD08	On Grade	Grate	Bridge Drain (Cast)	1.31	0.07	1.24	NB-SUP-BD04	n/a	n/a	1.14	3.44	3.9	5.24	10	0.13	0.5
NB-SUP-BD12	On Grade	Grate	Bridge Drain (Cast)	1.28	0.07	1.21	NB-SUP-BD08	n/a	n/a	1.14	3.44	3.9	5.19	10	0.13	0.5
NB-SUP-BD16	On Grade	Grate	Bridge Drain (Cast)	1.18	0.05	1.13	NB-SUP-BD12	n/a	n/a	1.14	3.44	3.9	5.04	10	0.13	0.5
NB-SUP-BD20	On Grade	Grate	Bridge Drain (Cast)	1.14	0.05	1.09		n/a	n/a	1.14	3.44	3.9	4.97	10	0.12	0.5
NB-SUP-BD23	On Grade	Grate	Bridge Drain (Cast)	2.08	0.25	1.83		n/a	n/a	1.14	3.44	3.9	6.22	10	0.16	0.5
NB-SUP-BD30	On Grade	Grate	Bridge Drain (Cast)	1.92	0.2	1.72	NB-SUP-BD34	n/a	n/a	1.14	3.44	3.9	6.04	10	0.15	0.5
NB-US181-BD01	On Grade	Grate	Bridge Drain (Cast)	1.42	0	1.32	NB-US181-18	n/a	n/a	1.14	3.44	3.9	5.39	10	0.13	0.5
NB-US181-BD02	On Grade	Grate	Bridge Drain (Cast)	1.47	0	1.34	NB-US181-BD01	n/a	n/a	1.14	3.44	3.9	5.42	10	0.14	0.5
NB-US181-BD03	On Grade	Grate	Bridge Drain (Cast)	1.58	0	1.38	NB-US181-BD02	n/a	n/a	1.14	3.44	3.9	5.49	10	0.14	0.5
NB-US181-BD04	On Grade	Grate	Bridge Drain (Cast)	1.36	0	1.24	NB-US181-BD03	n/a	n/a	1.14	3.44	3.9	5.24	10	0.13	0.5
NB-US181-BD05	On Grade	Grate	Bridge Drain (Cast)	1.69	0	1.32	NB-US181-BD04	n/a	n/a	1.14	3.44	3.9	5.39	10	0.13	0.5
NB-US181-BD06	On Grade	Grate	Bridge Drain (Cast)	1.75	0.16	1.59	NB-US181-BD05	n/a	n/a	1.14	3.44	3.9	5.83	10	0.15	0.5
NB-US181-BD07	On Grade	Grate	Bridge Drain (Cast)	1.37	0	1.3	NB-US181-BD06	n/a	n/a	1.14	3.44	3.9	5.35	10	0.13	0.5
NB-US181-BD08	On Grade	Grate	Bridge Drain (Cast)	1.55	0	1.38	NB-US181-BD07	n/a	n/a	1.14	3.44	3.9	5.48	10	0.14	0.5
NB-US181-BD09	On Grade	Grate	Bridge Drain (Cast)	1.58	0	1.37	NB-US181-BD08	n/a	n/a	1.14	3.44	3.9	5.47	10	0.14	0.5
NB-US181-BD10	On Grade	Grate	Bridge Drain (Cast)	4.71	0	1.37	NB-US181-BD09	n/a	n/a	1.14	3.44	3.9	5.47	10	0.14	0.5
NB-US181-BD11	On Grade	Grate	Bridge Drain (Cast)	3.2	3.2	0	NB-US181-BD10	n/a	n/a	1.14	3.44	3.9	0.01	10	9.19	0.5
NB-US181-BD12	On Grade	Grate	Bridge Drain (Cast)	1.49	1.49	0	NB-US181-BD11	n/a	n/a	1.14	3.44	3.9	0.01	10	6.91	0.5
NB-US181-BD13	On Grade	Grate	Bridge Drain (Cast)	1.62	0	1.31	NB-US181-BD12	n/a	n/a	1.14	3.44	3.9	5.37	10	0.13	0.5
NB-US181-BD14	On Grade	Grate	Bridge Drain (Cast)	1.52	0.11	1.4	NB-US181-BD13	n/a	n/a	1.14	3.44	3.9	5.53	10	0.14	0.5
NB-US181-BD15	On Grade	Grate	Bridge Drain (Cast)	1.68	0	1.33	NB-US181-BD14	n/a	n/a	1.14	3.44	3.9	5.39	10	0.13	0.5
NB-US181-BD16	On Grade	Grate	Bridge Drain (Cast)	1.67	0.14	1.53	NB-US181-BD15	n/a	n/a	1.14	3.44	3.9	5.74	10	0.14	0.5
NB-US181-BD17	On Grade	Grate	Bridge Drain (Cast)	1.58	0	1.33	NB-US181-BD16	n/a	n/a	1.14	3.44	3.9	5.4	10	0.14	0.5
NB-US181-BD18	On Grade	Grate	Bridge Drain (Cast)	1.6	0.13	1.47	NB-US181-BD17	n/a	n/a	1.14	3.44	3.9	5.64	10	0.14	0.5
NB-US181-BD19	On Grade	Grate	Bridge Drain (Cast)	1.28	0.07	1.21	NB-US181-BD18	n/a	n/a	1.14	3.44	3.9	5.2	10	0.13	0.5
NB-US181-BD20	On Grade	Grate	Bridge Drain (Cast)	2.68	0	2.19	NB-US181-BD19	n/a	n/a	1.14	3.44	3.9	6.82	10	0.17	0.5
NB-US181-BD21	On Grade	Grate	Bridge Drain (Cast)	2.72	0.5	2.22	NB-US181-BD20	n/a	n/a	1.14	3.44	3.9	6.88	10	0.17	0.5
NB-US181-BD22	On Grade	Grate	Bridge Drain (Cast)	2.62	0.45	2.17	NB-US181-BD21	n/a	n/a	1.14	3.44	3.9	6.79	10	0.17	0.5
NB-US181-BD23	On Grade	Grate	Bridge Drain (Cast)	2.91	0.58	2.33	NB-US181-BD22	n/a	n/a	1.14	3.44	3.9	7.06	10	0.18	0.5
NB-US181-BD24	On Grade	Grate	Bridge Drain (Cast)	3.43	0.81	2.62	NB-US181-BD23	n/a	n/a	1.14	3.44	3.9	7.56	10	0.19	0.5
NB-US181-BD25	On Grade	Grate	Bridge Drain (Cast)	3.61	0.85	2.76	NB-US181-BD24	n/a	n/a	1.14	3.44	3.9	8.28	10	0.21	0.5
NB-US181-BD26	On Grade	Grate	Bridge Drain (Cast)	3.24	0.86	2.37	NB-US181-BD25	n/a	n/a	1.14	3.44	3.9	8.93	10	0.22	0.5

INLET COMPUTATIONS (10-YR)

ID	PROFILE TYPE	TYPE	LIBRARY ITEM DESCRIPTION	DISCHARGE	BYPASS FLOW	CAPACITY	BYPASS NODE ID	CURB DEPRESSION	CURB LENGTH	GRATE LENGTH	GRATE WIDTH	GRATE AREA	COMPUTED PONDED WIDTH	MAX PONDED WITDH	COMPUTED PONDED DEPTH	MAX PONDED DEPTH
				CFS	CFS	CFS		FT	FT	FT	FT	SF	FT	FT	FT	FT
SB-US181-BD01	On Grade	Grate	Bridge Drain (Cast)	1.75	0	1.55	SB-US181-20	n/a	n/a	1.14	3.44	3.9	5.77	10	0.14	0.5
SB-US181-BD02	On Grade	Grate	Bridge Drain (Cast)	1.79	0	1.64	SB-US181-BD01	n/a	n/a	1.14	3.44	3.9	5.92	10	0.15	0.5
SB-US181-BD03	On Grade	Grate	Bridge Drain (Cast)	2.03	0	1.73	SB-US181-BD02	n/a	n/a	1.14	3.44	3.9	6.05	10	0.15	0.5
SB-US181-BD04	On Grade	Grate	Bridge Drain (Cast)	1.8	0	1.42	SB-US181-BD03	n/a	n/a	1.14	3.44	3.9	5.55	10	0.14	0.5
SB-US181-BD05	On Grade	Grate	Bridge Drain (Cast)	2.06	0.24	1.82	SB-US181-BD04	n/a	n/a	1.14	3.44	3.9	6.2	10	0.16	0.5
SB-US181-BD06	On Grade	Grate	Bridge Drain (Cast)	2.17	0.28	1.89	SB-US181-BD05	n/a	n/a	1.14	3.44	3.9	6.32	10	0.16	0.5
SB-US181-BD07	On Grade	Grate	Bridge Drain (Cast)	2.13	0.27	1.86	SB-US181-BD06	n/a	n/a	1.14	3.44	3.9	6.28	10	0.16	0.5
SB-US181-BD08	On Grade	Grate	Bridge Drain (Cast)	1.56	0.69	0.87	SB-US181-BD07	n/a	n/a	3.44	1.14	3.9	5.59	10	0.14	0.5
SB-US181-BD09	On Grade	Grate	Bridge Drain (Cast)	1.58	0	1.38	SB-US181-BD08	n/a	n/a	1.14	3.44	3.9	5.49	10	0.14	0.5
SB-US181-BD10	On Grade	Grate	Bridge Drain (Cast)	2.26	0	1.36	SB-US181-BD09	n/a	n/a	1.14	3.44	3.9	5.45	10	0.14	0.5
SB-US181-BD11	On Grade	Grate	Bridge Drain (Cast)	3.21	0.71	2.5	SB-US181-BD10	n/a	n/a	1.14	3.44	3.9	7.32	10	0.18	0.5
SB-US181-BD12	On Grade	Grate	Bridge Drain (Cast)	1.49	1.49	0	SB-US181-BD11	n/a	n/a	1.14	3.44	3.9	0.01	10	6.91	0.5
SB-US181-BD13	On Grade	Grate	Bridge Drain (Cast)	1.65	0	1.31	SB-US181-BD12	n/a	n/a	1.14	3.44	3.9	5.36	10	0.13	0.5
SB-US181-BD14	On Grade	Grate	Bridge Drain (Cast)	1.73	0.16	1.58	SB-US181-BD13	n/a	n/a	1.14	3.44	3.9	5.81	10	0.15	0.5
SB-US181-BD15	On Grade	Grate	Bridge Drain (Cast)	1.73	0.16	1.57	SB-US181-BD14	n/a	n/a	1.14	3.44	3.9	5.81	10	0.15	0.5
SB-US181-BD16	On Grade	Grate	Bridge Drain (Cast)	1.84	0.18	1.66	SB-US181-BD15	n/a	n/a	1.14	3.44	3.9	5.95	10	0.15	0.5
SB-US181-BD17	On Grade	Grate	Bridge Drain (Cast)	1.47	0.1	1.37	SB-US181-BD16	n/a	n/a	1.14	3.44	3.9	5.47	10	0.14	0.5
SB-US181-BD18	On Grade	Grate	Bridge Drain (Cast)	1.5	0.11	1.39	SB-US181-BD17	n/a	n/a	1.14	3.44	3.9	5.51	10	0.14	0.5
SB-US181-BD19	On Grade	Grate	Bridge Drain (Cast)	1.65	0	1.72	SB-US181-BD18	n/a	n/a	1.14	3.44	3.9	6.04	10	0.15	0.5
SB-US181-BD20	On Grade	Grate	Bridge Drain (Cast)	2.76	0	2.2	SB-US181-BD19	n/a	n/a	1.14	3.44	3.9	6.84	10	0.17	0.5
SB-US181-BD21	On Grade	Grate	Bridge Drain (Cast)	3.21	0.71	2.5	SB-US181-BD20	n/a	n/a	1.14	3.44	3.9	7.32	10	0.18	0.5
SB-US181-BD22	On Grade	Grate	Bridge Drain (Cast)	3.15	0.69	2.47	SB-US181-BD21	n/a	n/a	1.14	3.44	3.9	7.27	10	0.18	0.5
SB-US181-BD23	On Grade	Grate	Bridge Drain (Cast)	3.49	0.85	2.64	SB-US181-BD22	n/a	n/a	1.14	3.44	3.9	7.56	10	0.19	0.5
SB-US181-BD24	On Grade	Grate	Bridge Drain (Cast)	4.01	1.1	2.91	SB-US181-BD23	n/a	n/a	1.14	3.44	3.9	8.02	10	0.2	0.5
SB-US181-BD25	On Grade	Grate	Bridge Drain (Cast)	4.16	1.11	3.05	SB-US181-BD24	n/a	n/a	1.14	3.44	3.9	8.73	10	0.22	0.5
SB-US181-BD26	On Grade	Grate	Bridge Drain (Cast)	3.65	1.05	2.6	SB-US181-BD25	n/a	n/a	1.14	3.44	3.9	9.34	10	0.23	0.5

NO.	REVISIONS	BY	DATE

PRELIMINARY
FOR REVIEW ONLY
THESE DOCUMENTS ARE PRELIMINARY AND SUBJECT TO CHANGE. THEY ARE NOT INTENDED FOR CONSTRUCTION OR BIDDING. THEY WERE PREPARED BY, OR UNDER THE SUPERVISION OF:
Engineer: JACEK KWASNIEWSKI
P.E. No.: 95757
Date: 6/9/2017

RELEASE FOR CONSTRUCTION

US 181 HARBOR BRIDGE

HYDRAULIC DATA SHEET

FLATIRON/DRAGADOS LLC

Stantec
Engineered by Stantec Consulting Services Inc.
Texas Registered Engineering Firm F-6324

Texas Department of Transportation
© 2017

SHEET 2 OF 2

FED. RD. DIV. NO.	FEDERAL AID PROJECT NO.		SHEET NO.
6	HP X597(1)		DRN 009
STATE	STATE DIST. NO.	COUNTY	
TEXAS	CRP	NUECES	
CONT.	SECT	JOB	HIGHWAY NO.
0101	06	095	US181

PROJECT
US 181 HARBOR BRIDGE

Checked by: Date:
Back-Checked by: Date:
Corrected by: Date:
Verified by: Date:

☐ Detail Check ☐ Internal Review ☐ Design Review ☐ TxDOT
☐ Drawing ☐ Report ☐ Other:
Prepared By: Date:
☐ Drawing Checked Against Calculations ☐ Calculations Check Confirmed
REVIEW PHASE

Plotted: 6/9/2017 1:58:06 PM
Pen Table: HBR_Pack1A_DRN.tbl
Design File: c:\pw_online\stantec\dms97318\HBR_DRN_BRIDGE_HYD02.dgn

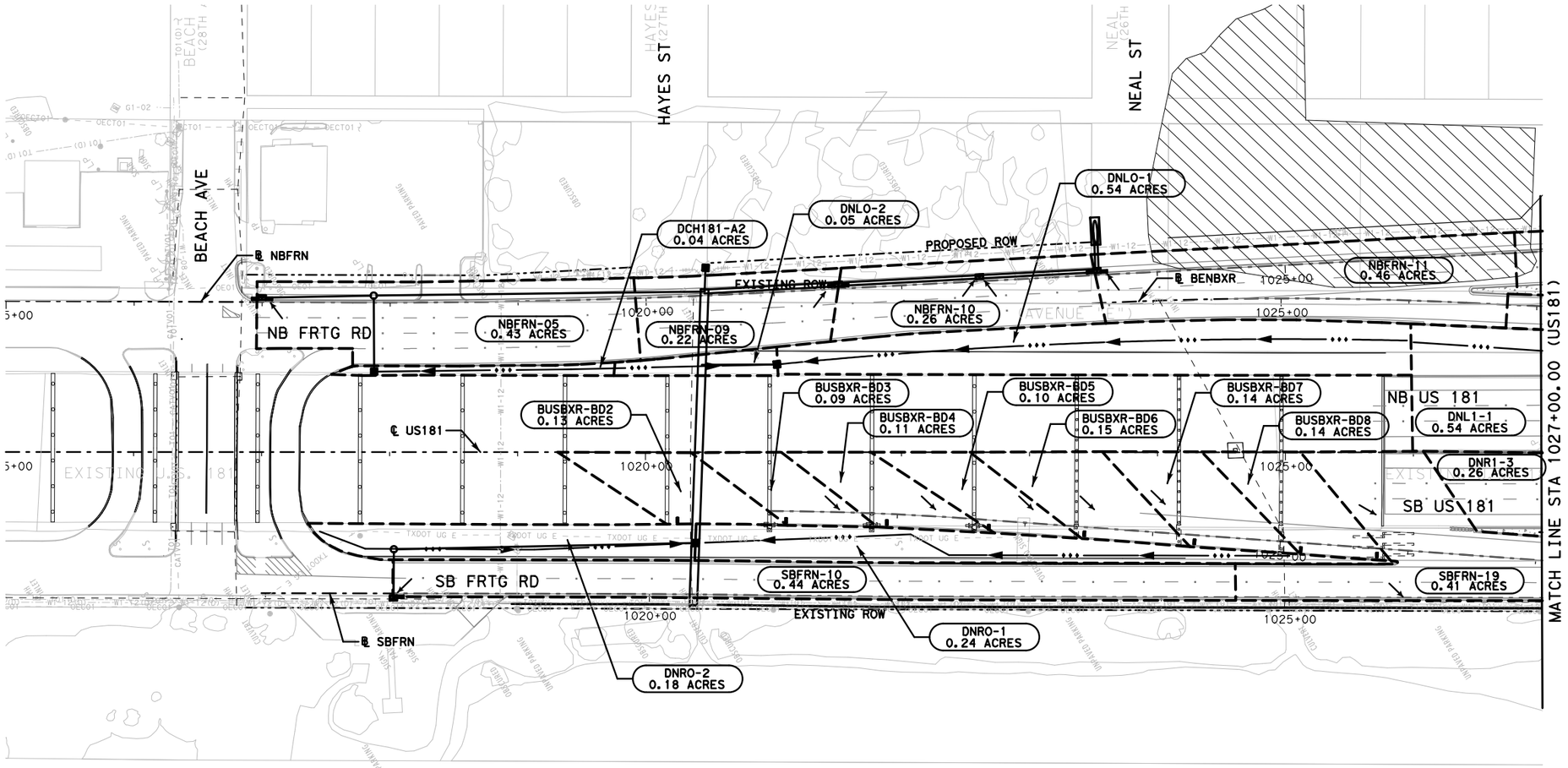

LEGEND

- DRAINAGE AREA BOUNDARY
- BASIN ID / DA ACRES — DRAINAGE AREA IDENTIFIER
- SURFACE FLOW ARROW
- EXISTING WETLANDS
- PROPOSED DITCH

PROJECT
US 181 HARBOR BRIDGE

Checked by: Date:
Back-Checked by: Date:
Corrected by: Date:
Verified by: Date:

REVIEW PHASE: ☐ Detail Check ☐ Internal Review ☐ Design Review ☐ TxDOT ☐ Drawing ☐ Report ☐ Other: ____
Prepared By: Date:
☐ Drawing Checked Against Calculations ☐ Calculations Check Confirmed

Plotted: 6/9/2017 1:58:21 PM
Pen Table: HBR_Packt_DRN.tbl
Design File: c:\pw_online\stantec\dms97318\HBR_DRN_US181_DA01.dgn

NO.	REVISIONS	BY	DATE

PRELIMINARY
FOR REVIEW ONLY
THESE DOCUMENTS ARE PRELIMINARY AND SUBJECT TO CHANGE. THEY ARE NOT INTENDED FOR CONSTRUCTION OR BIDDING. THEY WERE PREPARED BY, OR UNDER THE SUPERVISION OF:
Engineer: JACEK KWASNIEWSKI
P.E. No.: 95757
Date: 6/9/2017

RELEASE FOR CONSTRUCTION

US 181 HARBOR BRIDGE

DRAINAGE AREA MAP

STA 1015+00.00-STA 1027+00.00

SCALE: 1"=100'

FLATIRON/DRAGADOS LLC

Stantec
Engineered by Stantec Consulting Services Inc.
Texas Registered Engineering Firm F-6324

Texas Department of Transportation
© 2017
SHEET 1 OF 8

FED. RD. DIV. NO.	FEDERAL AID PROJECT NO.		SHEET NO.
6	HP X597(1)		DRN 010
STATE	STATE DIST. NO.	COUNTY	
TEXAS	CRP	NUECES	
CONT.	SECT	JOB	HIGHWAY NO.
0101	06	095	US181

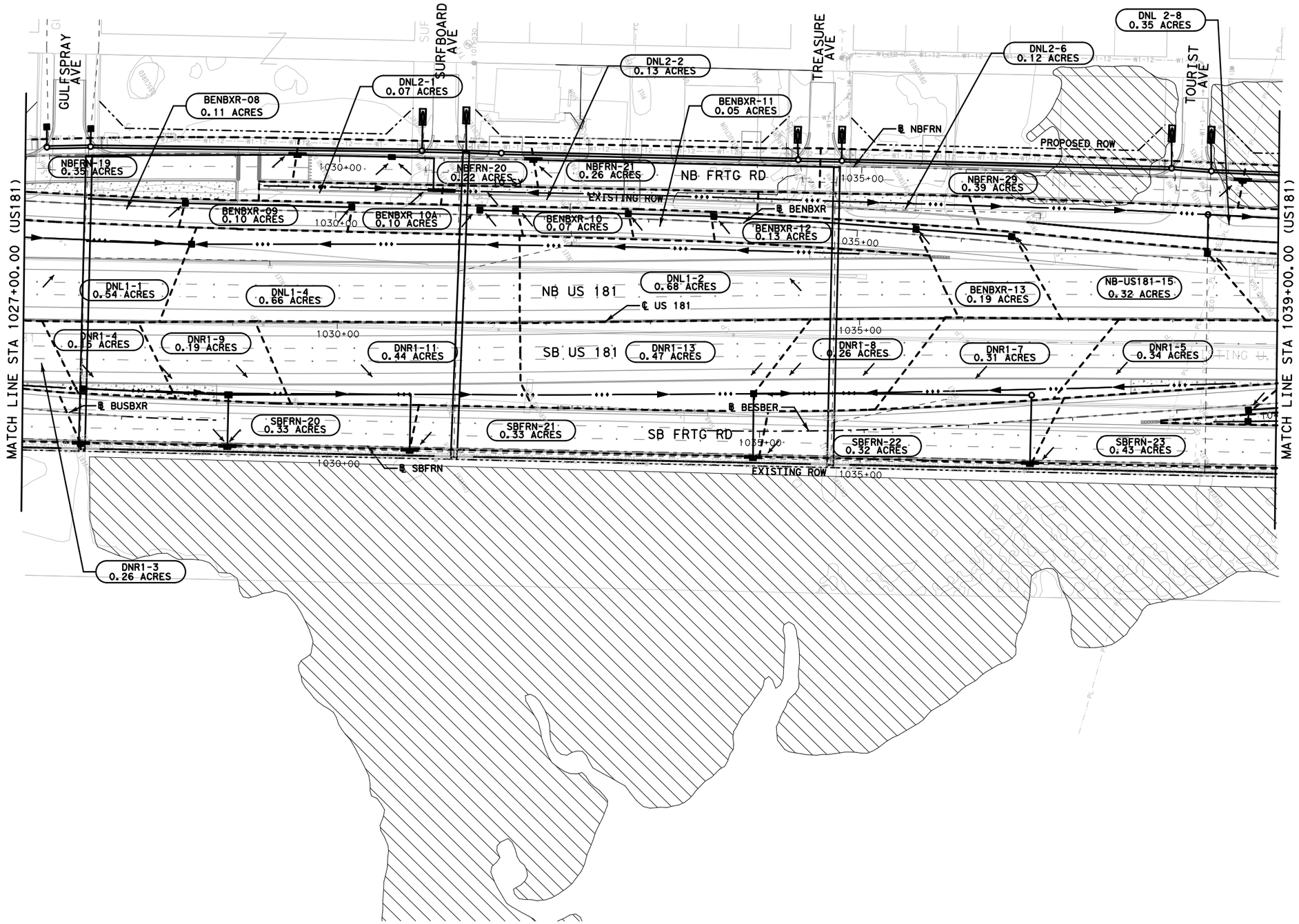

LEGEND

- DRAINAGE AREA BOUNDARY
- BASIN ID / DA ACRES — DRAINAGE AREA IDENTIFIER
- SURFACE FLOW ARROW
- EXISTING WETLANDS
- PROPOSED DITCH

PROJECT
US 181 HARBOR BRIDGE

Checked by: Date:
Back-Checked by: Date:
Corrected by: Date:
Verified by: Date:

☐ TxDOT
☐ Detail Check ☐ Internal Review ☐ Design Review
☐ Drawing ☐ Report ☐ Other:
Prepared By: Date:
☐ Drawing Checked Against Calculations ☐ Calculations Check Confirmed
REVIEW PHASE

Plotted: 6/9/2017 1:58:33 PM
Pen Table: HBR_Pack1A_DRN.tbl
Design File: c:\pw_online\stantec\dms97318\HBR_DRN_US181_DA02.dgn

NO.	REVISIONS	BY	DATE

PRELIMINARY
FOR REVIEW ONLY
THESE DOCUMENTS ARE PRELIMINARY AND SUBJECT TO CHANGE. THEY ARE NOT INTENDED FOR CONSTRUCTION OR BIDDING. THEY WERE PREPARED BY, OR UNDER THE SUPERVISION OF:
Engineer: JACEK KWASNIEWSKI
P.E. No.: 95757
Date: 6/9/2017

RELEASE FOR CONSTRUCTION

US 181 HARBOR BRIDGE

DRAINAGE AREA MAP

STA 1027+00.00-STA 1039+00.00

SCALE: 1"=100'

FLATIRON/DRAGADOS LLC

Stantec
Engineered by Stantec Consulting Services Inc.
Texas Registered Engineering Firm F-6324

Texas Department of Transportation
© 2017
SHEET 2 OF 8

FED. RD. DIV. NO.	FEDERAL AID PROJECT NO.		SHEET NO.
6	HP X597(1)		DRN 011
STATE	STATE DIST. NO.	COUNTY	
TEXAS	CRP	NUECES	
CONT.	SECT	JOB	HIGHWAY NO.
0101	06	095	US181

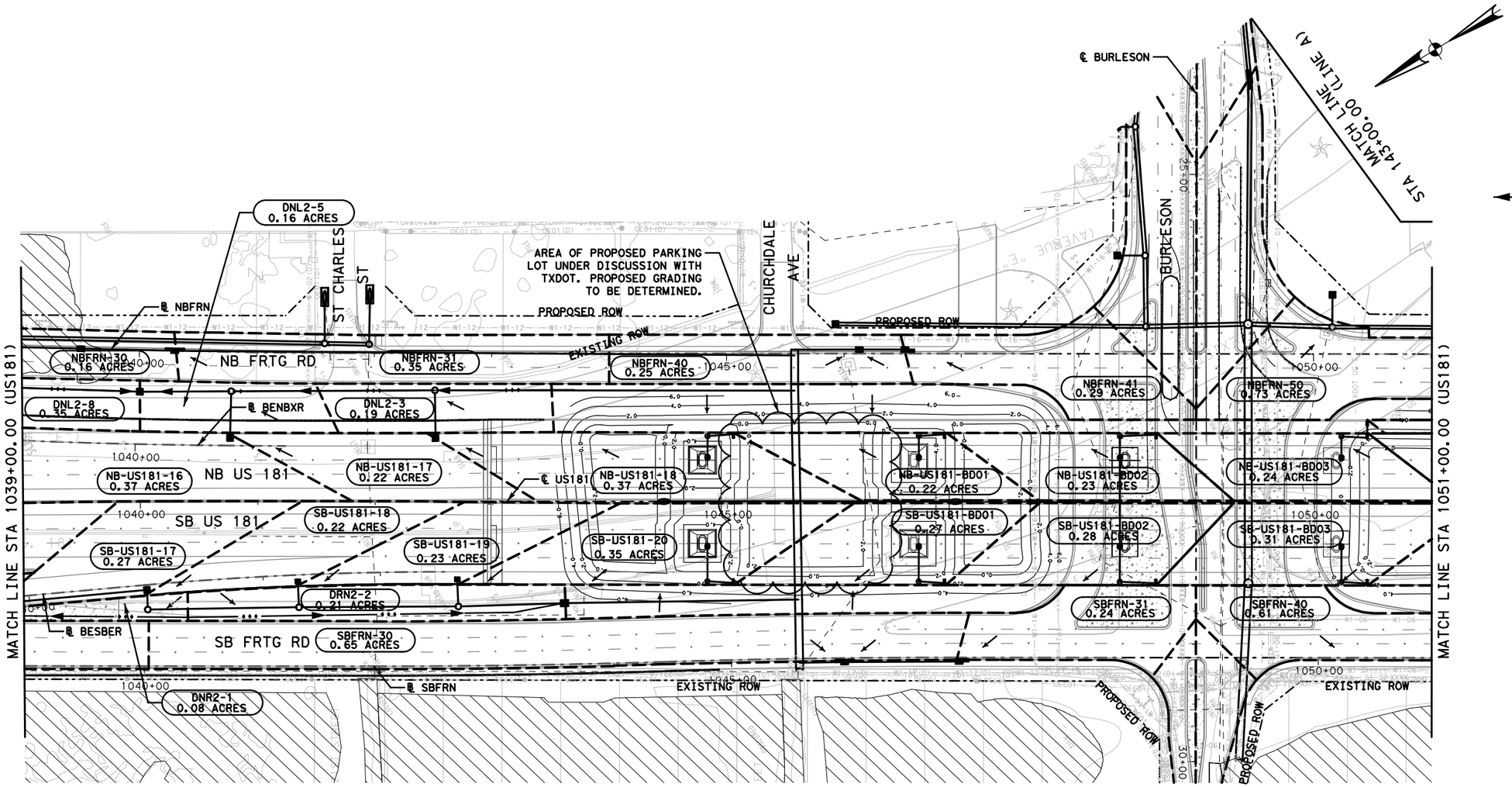

LEGEND

- DRAINAGE AREA BOUNDARY
- BASIN ID / DA ACRES — DRAINAGE AREA IDENTIFIER
- SURFACE FLOW ARROW
- EXISTING WETLANDS
- PROPOSED DITCH

PROJECT
US 181 HARBOR BRIDGE

Checked by: Date:
Back-Checked by: Date:
Corrected by: Date:
Verified by: Date:

☐ TxDOT
Prepared By: Date:

REVIEW PHASE
☐ Detail Check ☐ Internal Review ☐ Design Review
☐ Drawing ☐ Report ☐ Other:
☐ Drawing Checked Against Calculations ☐ Calculations Check Confirmed

Plotted: 6/9/2017 1:58:45 PM
Pen Table: HBR_Pack1A_DRN.tbl
Design File: c:\pw_online\stantec\dms97318\HBR_DRN_US181_DA03.dgn

NO.	REVISIONS	BY	DATE

PRELIMINARY
FOR REVIEW ONLY
THESE DOCUMENTS ARE PRELIMINARY AND SUBJECT TO CHANGE. THEY ARE NOT INTENDED FOR CONSTRUCTION OR BIDDING. THEY WERE PREPARED BY, OR UNDER THE SUPERVISION OF:
Engineer: JACEK KWASNIEWSKI
P.E. No.: 95757
Date: 6/9/2017

RELEASE FOR CONSTRUCTION

US 181 HARBOR BRIDGE

DRAINAGE AREA MAP

STA 1039+00.00-STA 1051+00.00

SCALE: 1"=100'

FLATIRON/DRAGADOS LLC

Stantec
Engineered by Stantec Consulting Services Inc.
Texas Registered Engineering Firm F-6324

Texas Department of Transportation
© 2017
SHEET 3 OF 8

FED. RD. DIV. NO.	FEDERAL AID PROJECT NO.		SHEET NO.
6	HP X597(1)		DRN 012
STATE	STATE DIST. NO.	COUNTY	
TEXAS	CRP	NUECES	
CONT.	SECT	JOB	HIGHWAY NO.
0101	06	095	US181

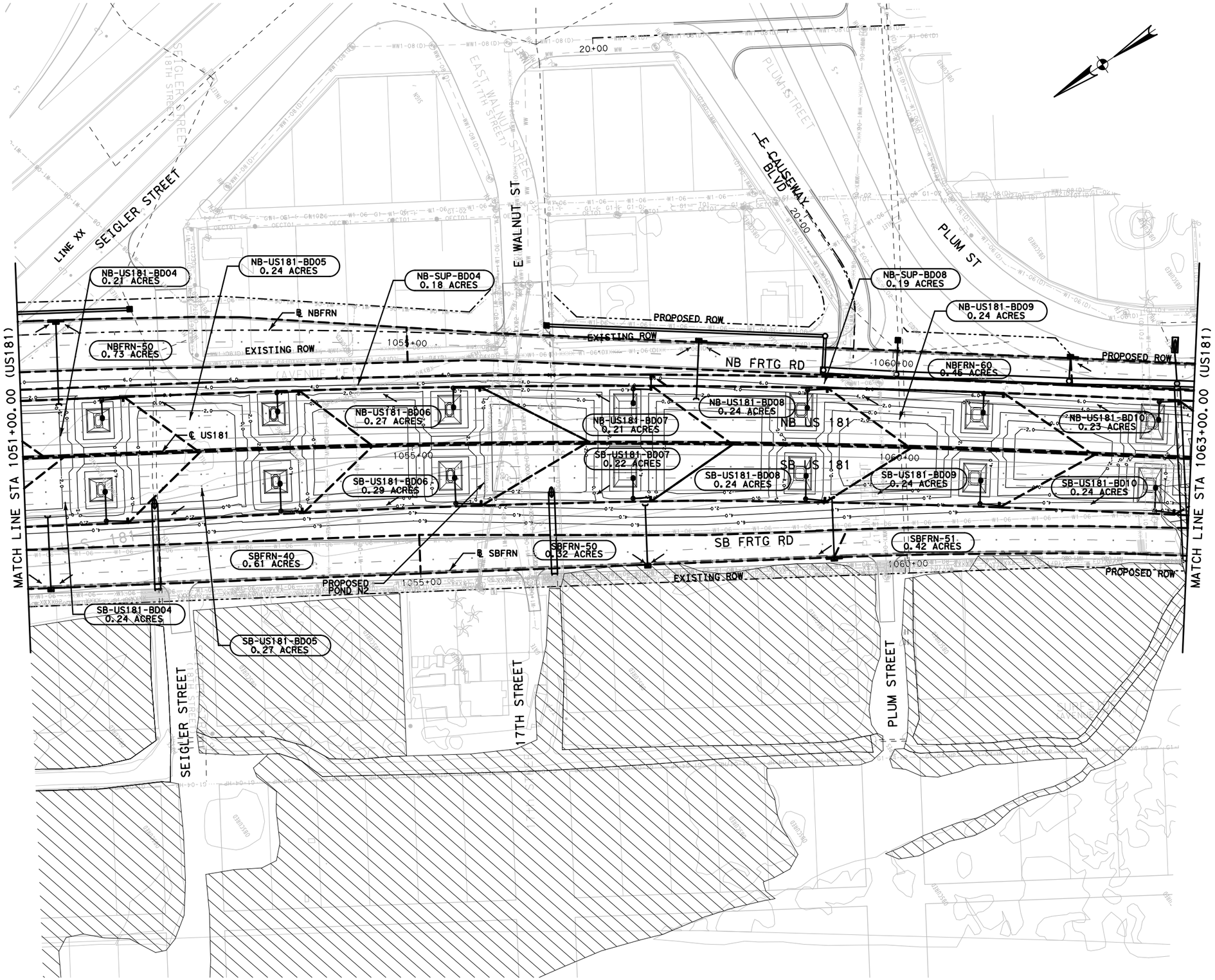

LEGEND

- DRAINAGE AREA BOUNDARY
- BASIN ID / DA ACRES — DRAINAGE AREA IDENTIFIER
- SURFACE FLOW ARROW
- EXISTING WETLANDS
- PROPOSED DITCH

PROJECT
US 181 HARBOR BRIDGE

Checked by: Date:
Back-Checked by: Date:
Corrected by: Date:
Verified by: Date:

☐ Detail Check ☐ Internal Review ☐ Design Review ☐ TxDOT
☐ Drawing ☐ Report ☐ Other:
Prepared By: Date:
☐ Drawing Checked Against Calculations ☐ Calculations Check Confirmed

REVIEW PHASE

Plotted: 6/9/2017 1:58:58 PM
Pen Table: HBR_Pack1A_DRN.Tbl
Design File: c:\pw_online\stantec\dms97318\HBR_DRN_US181_DA04.dgn

NO.	REVISIONS	BY	DATE

PRELIMINARY
FOR REVIEW ONLY
THESE DOCUMENTS ARE PRELIMINARY AND SUBJECT TO CHANGE. THEY ARE NOT INTENDED FOR CONSTRUCTION OR BIDDING. THEY WERE PREPARED BY, OR UNDER THE SUPERVISION OF:
Engineer: JACEK KWASNIEWSKI
P.E. No.: 95757
Date: 6/9/2017

RELEASE FOR CONSTRUCTION

US 181 HARBOR BRIDGE

DRAINAGE AREA MAP

STA 1051+00.00-STA 1063+00.00

SCALE: 1"=100'

FLATIRON/DRAGADOS LLC

Stantec
Engineered by Stantec Consulting Services Inc.
Texas Registered Engineering Firm F-6324

Texas Department of Transportation
© 2017
SHEET 4 OF 8

FED. RD. DIV. NO.	FEDERAL AID PROJECT NO.		SHEET NO.
6	HP X597(1)		DRN 013
STATE	STATE DIST. NO.	COUNTY	
TEXAS	CRP	NUECES	
CONT.	SECT	JOB	HIGHWAY NO.
0101	06	095	US181

LEGEND

- DRAINAGE AREA BOUNDARY
- BASIN ID / DA ACRES — DRAINAGE AREA IDENTIFIER
- SURFACE FLOW ARROW
- EXISTING WETLANDS
- PROPOSED DITCH

NOTE

1. OVERLAPPING DRAINAGE AREAS FOR NBFRN AND SBFRN ARE SHOWN ON SHEET 014.

PROJECT
US 181 HARBOR BRIDGE

Checked by: Date:
Back-Checked by: Date:
Corrected by: Date:
Verified by: Date:

☐ TxDOT

☐ Detail Check ☐ Internal Review ☐ Design Review ☐ TxDOT
☐ Drawing ☐ Report ☐ Other:

Prepared By: Date:

☐ Drawing Checked Against Calculations ☐ Calculations Check Confirmed

REVIEW PHASE

Plotted: 6/9/2017 1:59:11 PM
Pen Table: HBR_Pack1A_DRN.tbl
Design File: c:\pw_online\stantec\dms97318\HBR_DRN_US181_DA05.dgn

NO.	REVISIONS	BY	DATE

PRELIMINARY
FOR REVIEW ONLY
THESE DOCUMENTS ARE PRELIMINARY AND SUBJECT TO CHANGE. THEY ARE NOT INTENDED FOR CONSTRUCTION OR BIDDING. THEY WERE PREPARED BY, OR UNDER THE SUPERVISION OF:
Engineer: JACEK KWASNIEWSKI
P.E. No.: 95757
Date: 6/9/2017

RELEASE FOR CONSTRUCTION

US 181 HARBOR BRIDGE

DRAINAGE AREA MAP

STA 1063+00.00-STA 1075+00.00

SCALE: 1"=100'

FLATIRON/DRAGADOS LLC

Stantec
Engineered by Stantec Consulting Services Inc.
Texas Registered Engineering Firm F-6324

Texas Department of Transportation
© 2017

SHEET 5 OF 8

FED. RD. DIV. NO.	FEDERAL AID PROJECT NO.		SHEET NO.
6	HP X597(1)		DRN 014
STATE	STATE DIST. NO.	COUNTY	
TEXAS	CRP	NUECES	
CONT.	SECT	JOB	HIGHWAY NO.
0101	06	095	US181

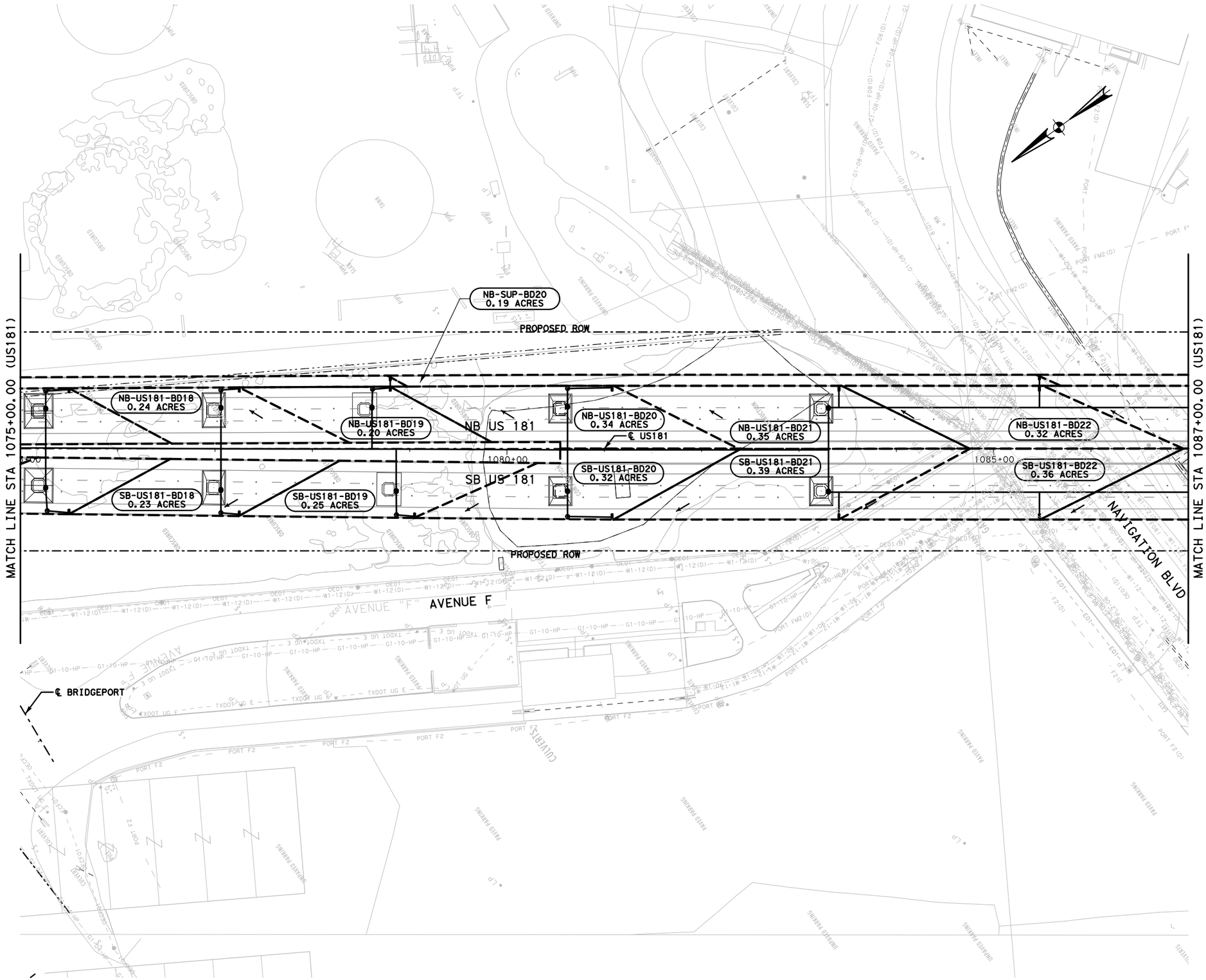

LEGEND

- DRAINAGE AREA BOUNDARY
- BASIN ID / DA ACRES — DRAINAGE AREA IDENTIFIER
- SURFACE FLOW ARROW
- EXISTING WETLANDS
- PROPOSED DITCH

PROJECT
US 181 HARBOR BRIDGE

Checked by: Date:
Back-Checked by: Date:
Corrected by: Date:
Verified by: Date:

REVIEW PHASE: ☐ Detail Check ☐ Internal Review ☐ Design Review ☐ TxDOT ☐ Drawing ☐ Report ☐ Other: ____

Prepared By: ____ Date: ____

☐ Drawing Checked Against Calculations ☐ Calculations Check Confirmed

Plotted: 6/9/2017 1:59:26 PM
Pen Table: HBR_Pack1A_DRN.tbl
Design File: c:\pw_online\stantec\dms97318\HBR_DRN_US181_DA06.dgn

NO.	REVISIONS	BY	DATE

PRELIMINARY
FOR REVIEW ONLY
THESE DOCUMENTS ARE PRELIMINARY AND SUBJECT TO CHANGE. THEY ARE NOT INTENDED FOR CONSTRUCTION OR BIDDING. THEY WERE PREPARED BY, OR UNDER THE SUPERVISION OF:
Engineer: JACEK KWASNIEWSKI
P.E. No.: 95757
Date: 6/9/2017

RELEASE FOR CONSTRUCTION

US 181 HARBOR BRIDGE

DRAINAGE AREA MAP

STA 1075+00.00-STA 1087+00.00

SCALE: 1"=100'

FLATIRON/DRAGADOS LLC

Stantec
Engineered by Stantec Consulting Services Inc.
Texas Registered Engineering Firm F-6324

Texas Department of Transportation
© 2017
SHEET 6 OF 8

FED. RD. DIV. NO.	FEDERAL AID PROJECT NO.		SHEET NO.
6	HP X597(1)		DRN 015
STATE	STATE DIST. NO.	COUNTY	
TEXAS	CRP	NUECES	
CONT.	SECT	JOB	HIGHWAY NO.
0101	06	095	US181

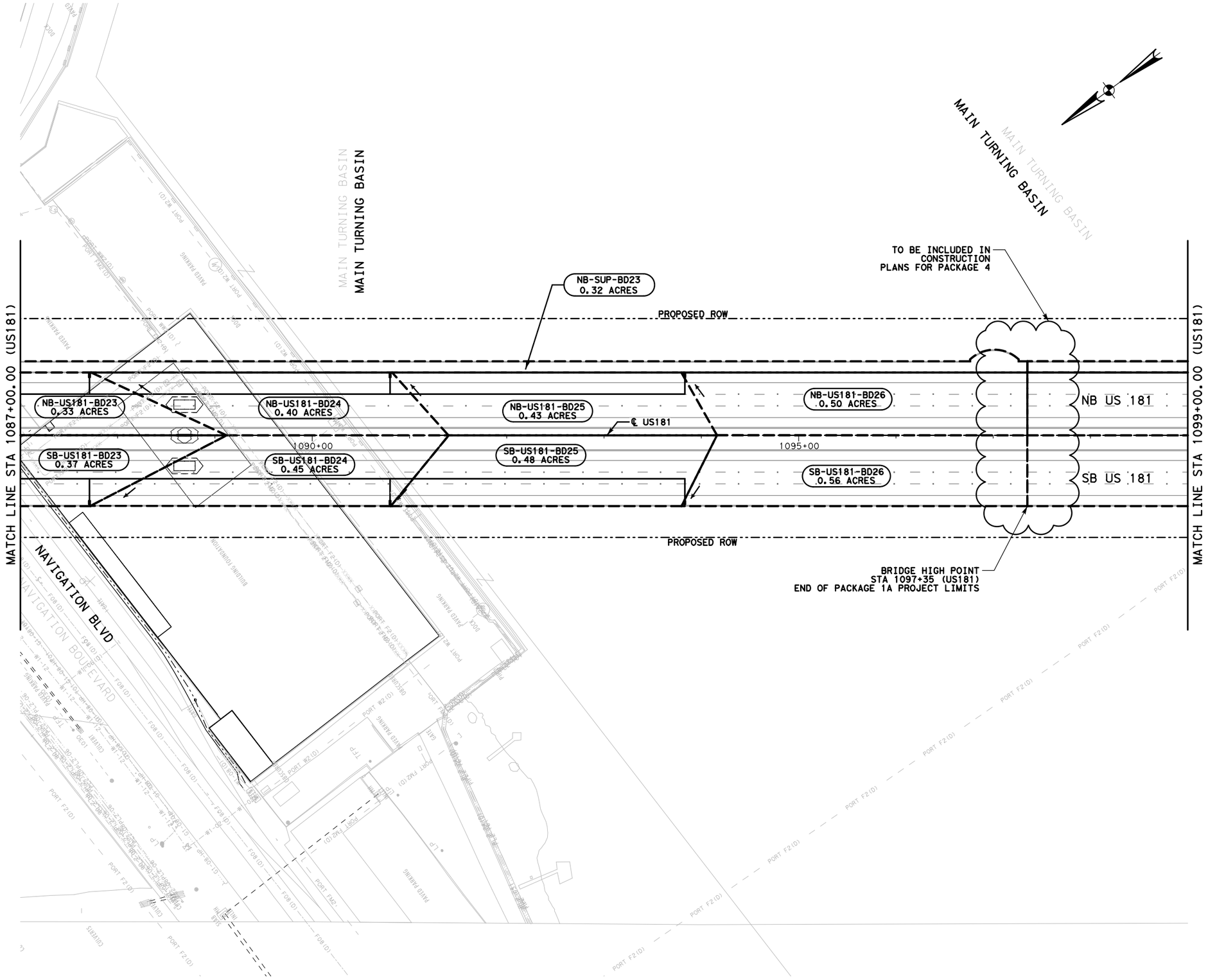

LEGEND

- DRAINAGE AREA BOUNDARY
- BASIN ID / DA ACRES — DRAINAGE AREA IDENTIFIER
- SURFACE FLOW ARROW
- EXISTING WETLANDS
- PROPOSED DITCH

PROJECT
US 181 HARBOR BRIDGE

Checked by: Date:
Back-Checked by: Date:
Corrected by: Date:
Verified by: Date:

☐ TxDOT

☐ Detail Check ☐ Internal Review ☐ Design Review ☐ Other:
☐ Drawing ☐ Report
Prepared By: Date:
☐ Drawing Checked Against Calculations ☐ Calculations Check Confirmed

REVIEW PHASE

Plotted: 6/9/2017 1:59:39 PM
Pen Table: HBR_Pack1A_DRN.tbl
Design File: c:\pw_online\stantec\dms97318\HBR_DRN_US181_DA07.dgn

NO.	REVISIONS	BY	DATE

PRELIMINARY
FOR REVIEW ONLY
THESE DOCUMENTS ARE PRELIMINARY AND SUBJECT TO CHANGE. THEY ARE NOT INTENDED FOR CONSTRUCTION OR BIDDING. THEY WERE PREPARED BY, OR UNDER THE SUPERVISION OF:
Engineer: JACEK KWASNIEWSKI
P.E. No.: 95757
Date: 6/9/2017

RELEASE FOR CONSTRUCTION

US 181 HARBOR BRIDGE

DRAINAGE AREA MAP

STA 1087+00.00-STA 1099+00.00

SCALE: 1"=100'

FLATIRON/DRAGADOS LLC

Stantec
Engineered by Stantec Consulting Services Inc.
Texas Registered Engineering Firm F-6324

Texas Department of Transportation
© 2017 SHEET 7 OF 8

FED. RD. DIV. NO.	FEDERAL AID PROJECT NO.		SHEET NO.
6	HP X597(1)		DRN 016
STATE	STATE DIST. NO.	COUNTY	
TEXAS	CRP	NUECES	
CONT.	SECT	JOB	HIGHWAY NO.
0101	06	095	US181

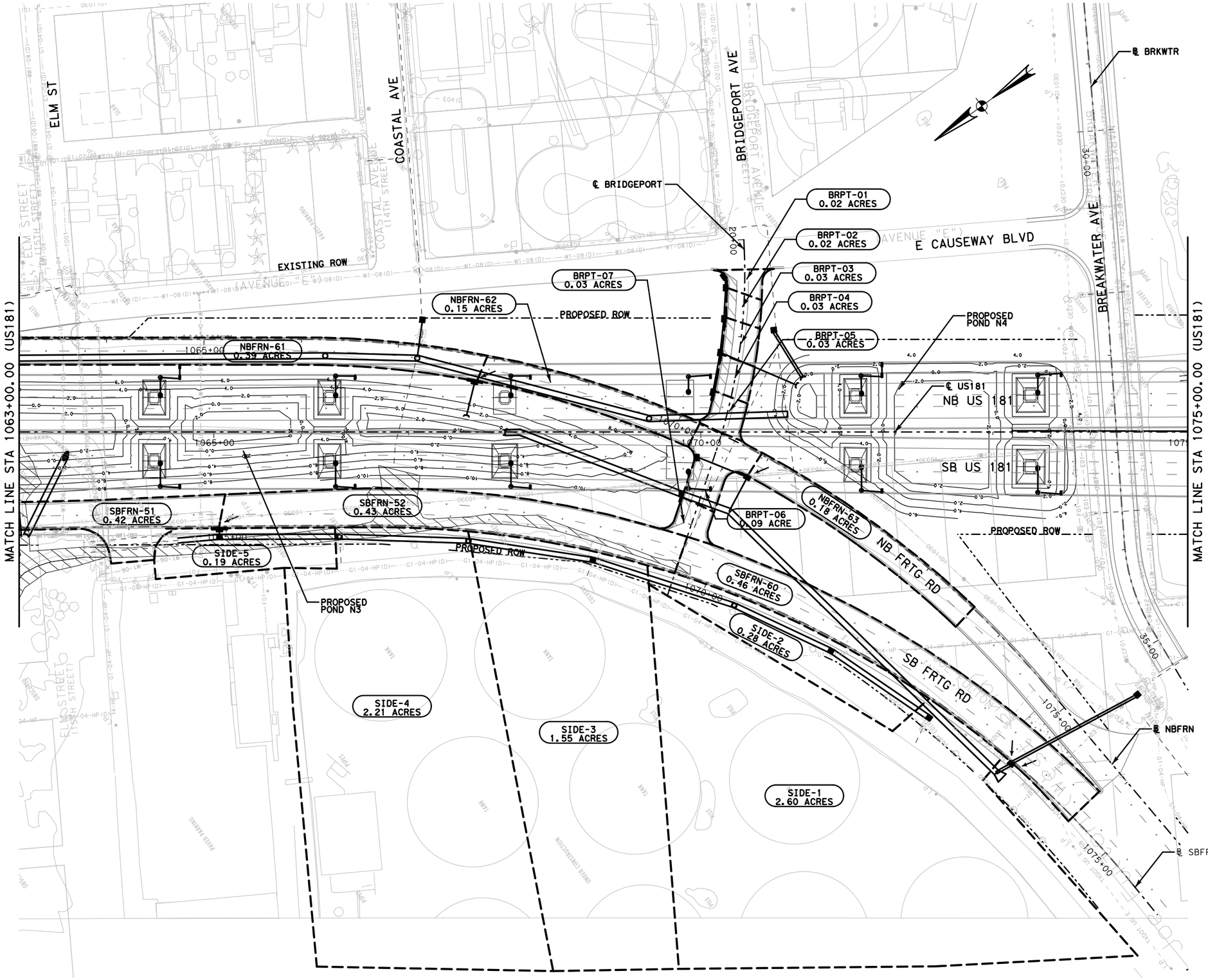

LEGEND

- DRAINAGE AREA BOUNDARY
- BASIN ID / DA ACRES — DRAINAGE AREA IDENTIFIER
- SURFACE FLOW ARROW
- EXISTING WETLANDS
- PROPOSED DITCH

NOTE

1. OVERLAPPING DRAINAGE AREAS FOR US181 ARE SHOWN ON SHEET 011.

PROJECT
US 181 HARBOR BRIDGE

Checked by: Date:
Back-Checked by: Date:
Corrected by: Date:
Verified by: Date:

☐ TxDOT
☐ Detail Check ☐ Internal Review ☐ Design Review
☐ Drawing ☐ Report ☐ Other:
Prepared By: Date:
☐ Drawing Checked Against Calculations ☐ Calculations Check Confirmed
REVIEW PHASE

Plotted: 6/9/2017 1:59:52 PM
Pen Table: HBR_Pack1A_DRN.tbl
Design File: c:\pw_online\stantec\dms97318\HBR_DRN_FRN_DA05.dgn

NO.	REVISIONS	BY	DATE

PRELIMINARY
FOR REVIEW ONLY
THESE DOCUMENTS ARE PRELIMINARY AND SUBJECT TO CHANGE. THEY ARE NOT INTENDED FOR CONSTRUCTION OR BIDDING. THEY WERE PREPARED BY, OR UNDER THE SUPERVISION OF:
Engineer: JACEK KWASNIEWSKI
P.E. No.: 95757
Date: 6/9/2017

RELEASE FOR CONSTRUCTION

US 181 HARBOR BRIDGE

DRAINAGE AREA MAP

STA 1063+00.00-STA 1075+00.00

SCALE: 1"=100'

FLATIRON/DRAGADOS LLC

Stantec
Engineered by Stantec Consulting Services Inc.
Texas Registered Engineering Firm F-6324

Texas Department of Transportation
© 2017
SHEET 8 OF 8

FED. RD. DIV. NO.	FEDERAL AID PROJECT NO.		SHEET NO.
6	HP X597(1)		DRN 017
STATE	STATE DIST. NO.	COUNTY	
TEXAS	CRP	NUECES	
CONT.	SECT	JOB	HIGHWAY NO.
0101	06	095	US181

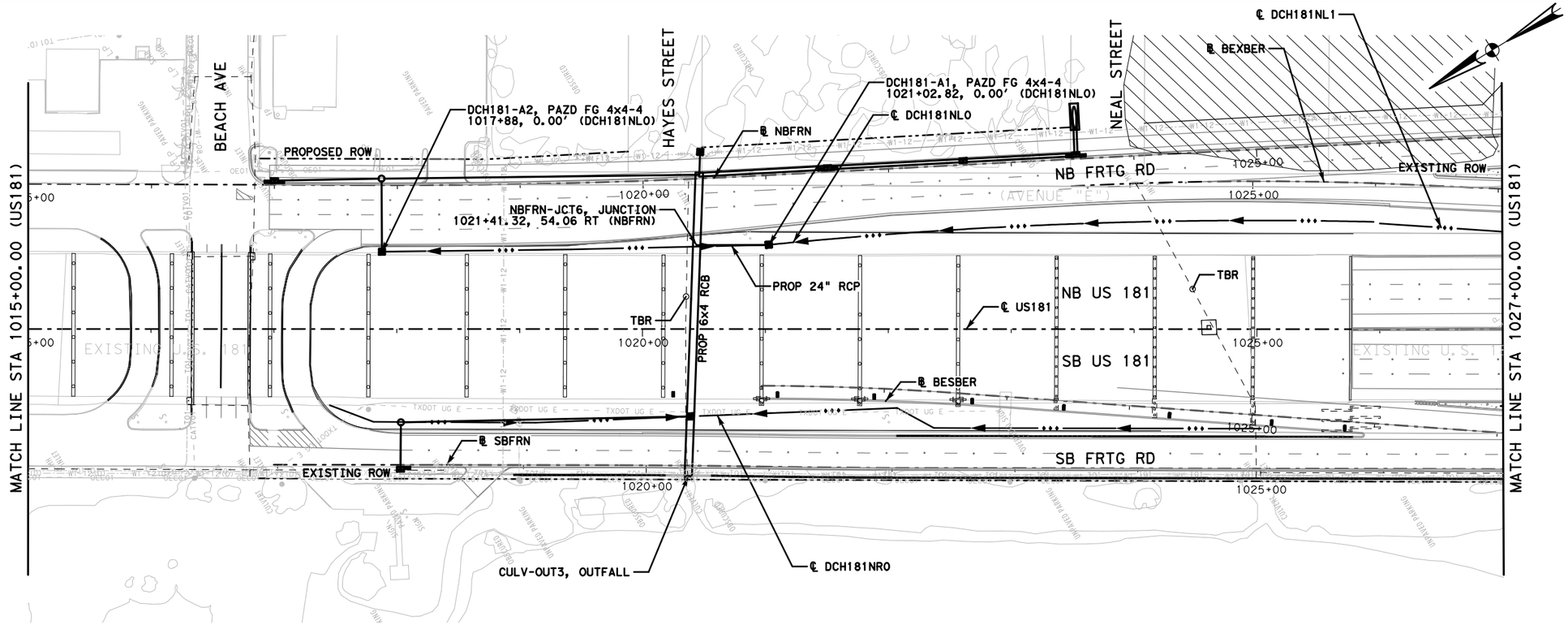

LEGEND

- 1.5" PFC
- RIPRAP
- DITCH
- PROPOSED MSE WALL
- EXISTING WETLANDS
- EXISTING STORM SEWER
- TBR — TO BE REMOVED
- INT — INTERCEPT EXISTING PIPE

NOTES:
1. DESIGN HGL WAS CALCULATED USING THE RINCON CHANNEL AVERAGE TIDEWATER ELEVATION OF +1.0' AS TAILWATER.
2. THE 10-YR TAILWATER (COSTAL FLOODING ELEVATION) IS +5.10'.

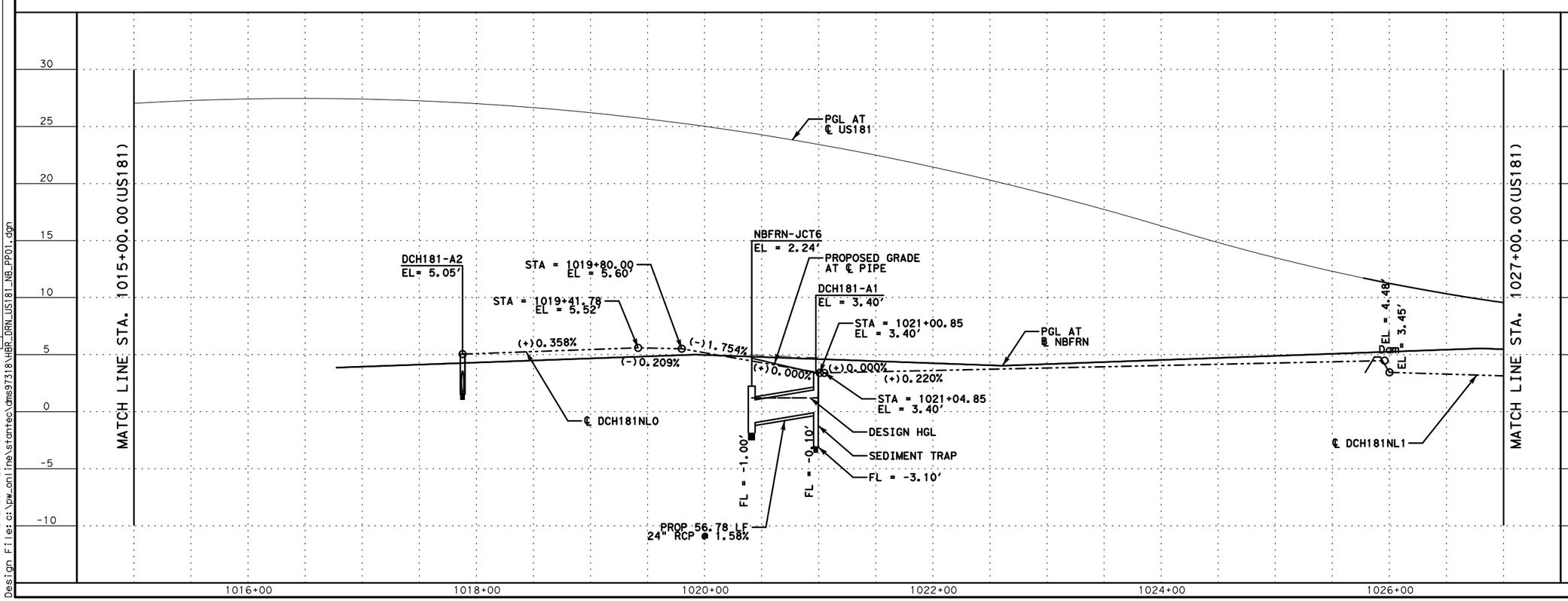

NO.	REVISIONS	BY	DATE

PRELIMINARY
FOR REVIEW ONLY
THESE DOCUMENTS ARE PRELIMINARY AND SUBJECT TO CHANGE. THEY ARE NOT INTENDED FOR CONSTRUCTION OR BIDDING. THEY WERE PREPARED BY, OR UNDER THE SUPERVISION OF:
Engineer: JACEK KWASNIEWSKI
P.E. No.: 95757
Date: 6/9/2017

RELEASE FOR CONSTRUCTION

US 181 HARBOR BRIDGE

DRAINAGE PLAN & PROFILE (US181) NORTH BOUND

STA 1015+00.0-STA 1027+00.0
SCALE: 1"=100' H
1"=10' V

FLATIRON/DRAGADOS LLC

Stantec
Engineered by Stantec Consulting Services Inc.
Texas Registered Engineering Firm F-6324

Texas Department of Transportation
© 2017
SHEET 1 OF 15

FED. RD. DIV. NO.	FEDERAL AID PROJECT NO.		SHEET NO.
6	HP X597(1)		DRN 018
STATE	STATE DIST. NO.	COUNTY	
TEXAS	CRP	NUECES	
CONT.	SECT	JOB	HIGHWAY NO.
0101	06	095	US181

PROJECT
US 181 HARBOR BRIDGE

Checked by: Date:
Back-Checked by: Date:
Corrected by: Date:
Verified by: Date:

☐ Detail Check ☐ Internal Review ☐ Design Review ☐ TxDOT
☐ Drawing ☐ Report ☐ Other:
Prepared By: Date:
☐ Drawing Checked Against Calculations ☐ Calculations Check Confirmed
REVIEW PHASE

Plotted: 6/9/2017 2:00:07 PM
Pen Table: HBR_Pack1A_DRN.tbl
Design File: c:\pw_online\stantec\ams97318\HBR_DRN_US181_NB_PP01.dgn

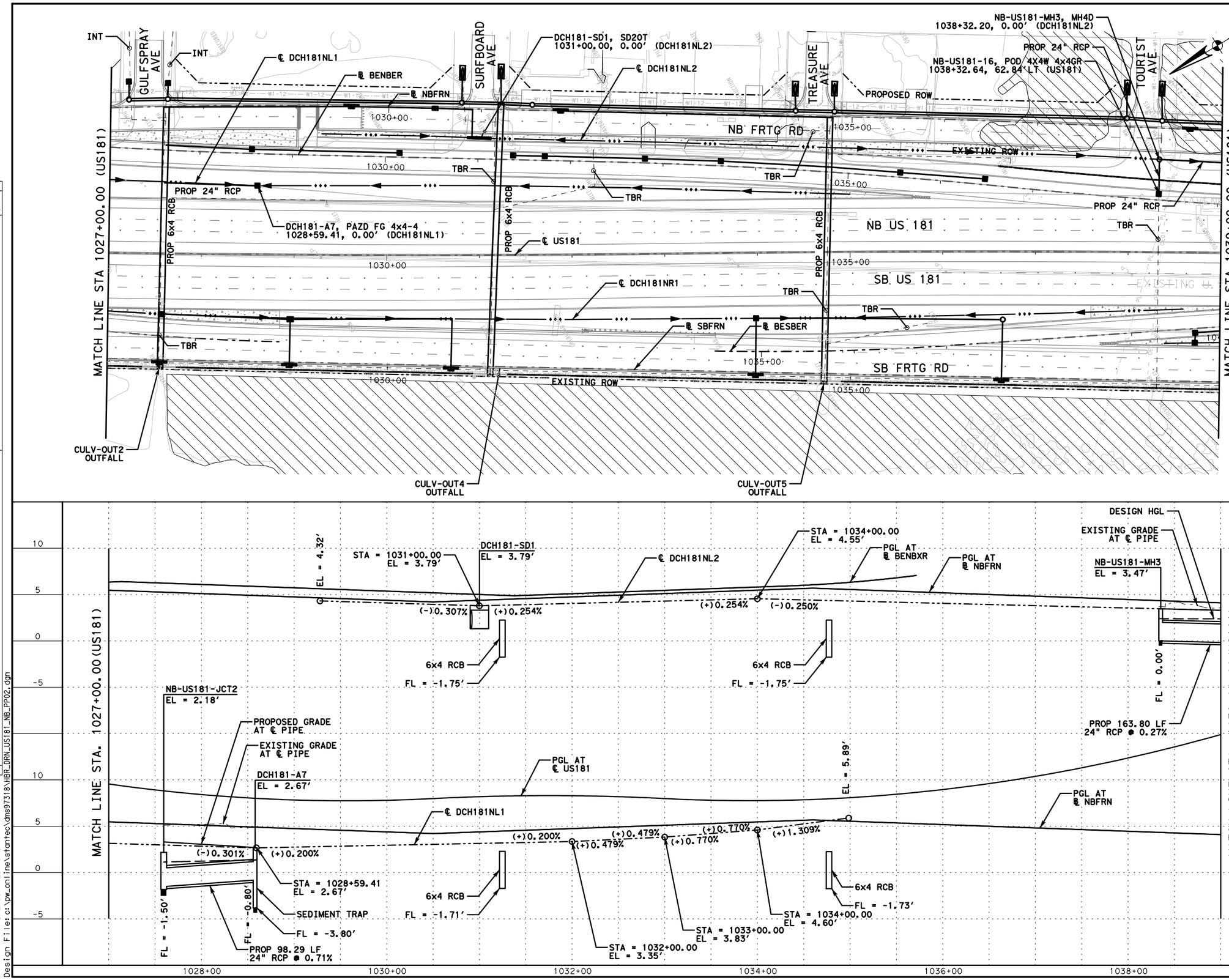

LEGEND

- 1.5" PFC
- RIPRAP
- DITCH
- PROPOSED MSE WALL
- EXISTING WETLANDS
- EXISTING STORM SEWER
- TBR — TO BE REMOVED
- INT — INTERCEPT EXISTING PIPE

NOTES:
1. DESIGN HGL WAS CALCULATED USING THE RINCON CHANNEL AVERAGE TIDEWATER ELEVATION OF +1.0' AS TAILWATER.
2. THE 10-YR TAILWATER (COSTAL FLOODING ELEVATION) IS +5.10'.

NO.	REVISIONS	BY	DATE

PRELIMINARY
FOR REVIEW ONLY
THESE DOCUMENTS ARE PRELIMINARY AND SUBJECT TO CHANGE. THEY ARE NOT INTENDED FOR CONSTRUCTION OR BIDDING. THEY WERE PREPARED BY, OR UNDER THE SUPERVISION OF:
Engineer: JACEK KWASNIEWSKI
P.E. No.: 95757
Date: 6/9/2017

RELEASE FOR CONSTRUCTION

US 181 HARBOR BRIDGE

DRAINAGE PLAN & PROFILE (US181) NORTH BOUND

STA 1027+00.0-STA 1039+00.0
SCALE: 1"=100' H
1"=10' V

FLATIRON/DRAGADOS LLC

Stantec
Engineered by Stantec Consulting Services Inc.
Texas Registered Engineering Firm F-6324

Texas Department of Transportation
© 2017

SHEET 2 OF 15

FED. RD. DIV. NO.	FEDERAL AID PROJECT NO.		SHEET NO.
6	HP X597(1)		DRN 019
STATE	STATE DIST. NO.	COUNTY	
TEXAS	CRP	NUECES	
CONT.	SECT	JOB	HIGHWAY NO.
0101	06	095	US181

PROJECT: US 181 HARBOR BRIDGE

Checked by: Date:
Back-Checked by: Date:
Corrected by: Date:
Verified by: Date:

☐ TxDOT
☐ Detail Check ☐ Internal Review ☐ Design Review
☐ Drawing ☐ Report ☐ Other:
Prepared By: Date:
☐ Drawing Checked Against Calculations ☐ Calculations Check Confirmed
REVIEW PHASE

Plotted: 6/9/2017 2:00:20 PM
Pen Table: HBR_Pack1A_DRN.tbl
Design File: c:\pw_online\stantec\dms97318\HBR_DRN_US181_NB_PP02.dgn

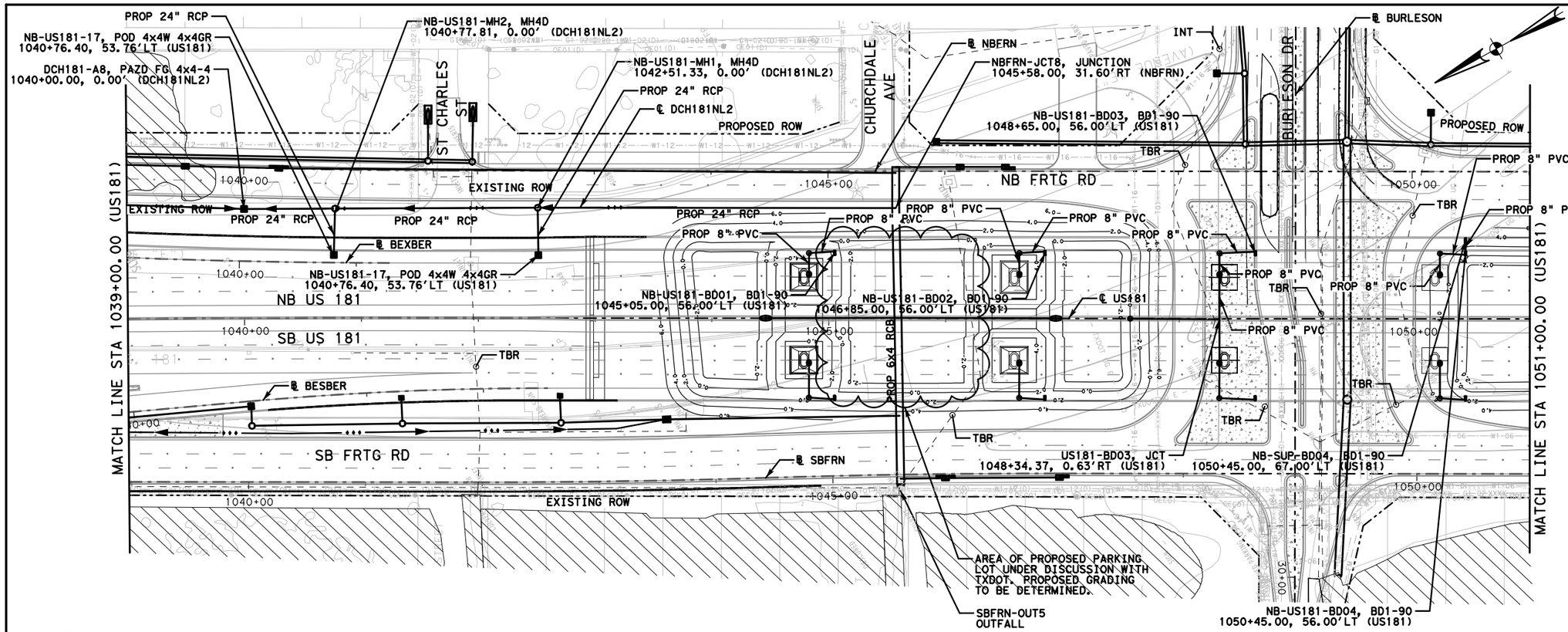

LEGEND

- 1.5" PFC
- RIPRAP
- DITCH
- PROPOSED MSE WALL
- EXISTING WETLANDS
- EXISTING STORM SEWER
- TBR — TO BE REMOVED
- INT — INTERCEPT EXISTING PIPE

NOTES:
1. DESIGN HGL WAS CALCULATED USING THE RINCON CHANNEL AVERAGE TIDEWATER ELEVATION OF +1.0' AS TAILWATER.
2. THE 10-YR TAILWATER (COSTAL FLOODING ELEVATION) IS +5.10'.

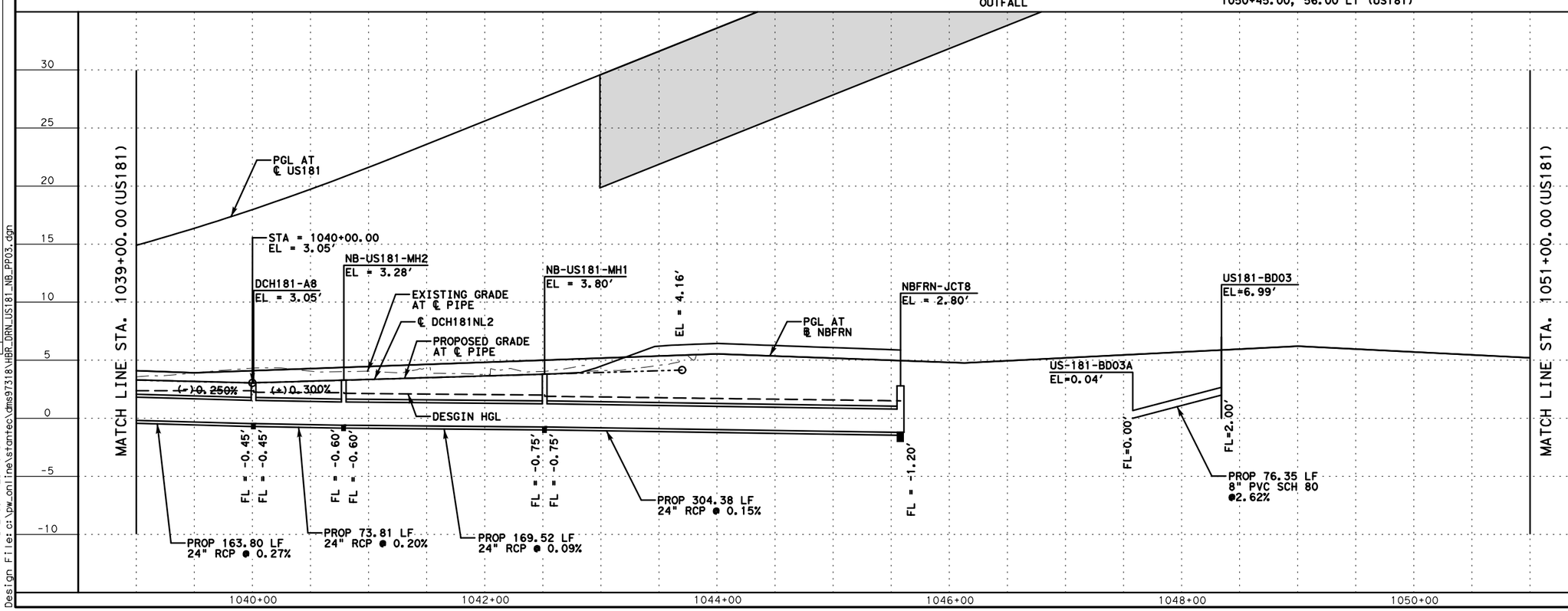

NO.	REVISIONS	BY	DATE

PRELIMINARY
FOR REVIEW ONLY
THESE DOCUMENTS ARE PRELIMINARY AND SUBJECT TO CHANGE. THEY ARE NOT INTENDED FOR CONSTRUCTION OR BIDDING. THEY WERE PREPARED BY, OR UNDER THE SUPERVISION OF:
Engineer: JACEK KWASNIEWSKI
P.E. No.: 95757
Date: 6/9/2017

RELEASE FOR CONSTRUCTION

US 181 HARBOR BRIDGE

DRAINAGE PLAN & PROFILE (US181) NORTH BOUND

STA 1039+00.0-STA 1051+00.0
SCALE: 1"=100'H
1"=10' V

FLATIRON/DRAGADOS LLC

Stantec
Engineered by Stantec Consulting Services Inc.
Texas Registered Engineering Firm F-6324

Texas Department of Transportation
© 2017
SHEET 3 OF 15

FED. RD. DIV. NO.	FEDERAL AID PROJECT NO.		SHEET NO.
6	HP X597(1)		DRN 020
STATE	STATE DIST. NO.	COUNTY	
TEXAS	CRP	NUECES	
CONT.	SECT	JOB	HIGHWAY NO.
0101	06	095	US181

PROJECT: US 181 HARBOR BRIDGE

REVIEW PHASE: ☐ Detail Check ☐ Internal Review ☐ Design Review ☐ TxDOT ☐ Drawing ☐ Report ☐ Other:

Prepared By: Date:
☐ Drawing Checked Against Calculations ☐ Calculations Check Confirmed
Checked by: Date:
Back-Checked by: Date:
Corrected by: Date:
Verified by: Date:

Plotted: 6/9/2017 2:00:34 PM
Pen Table: HBR_Pack1A_DRN.tbl
Design File: c:\pw_online\stantec\dms97318\HBR_DRN_US181_NB_PP03.dgn

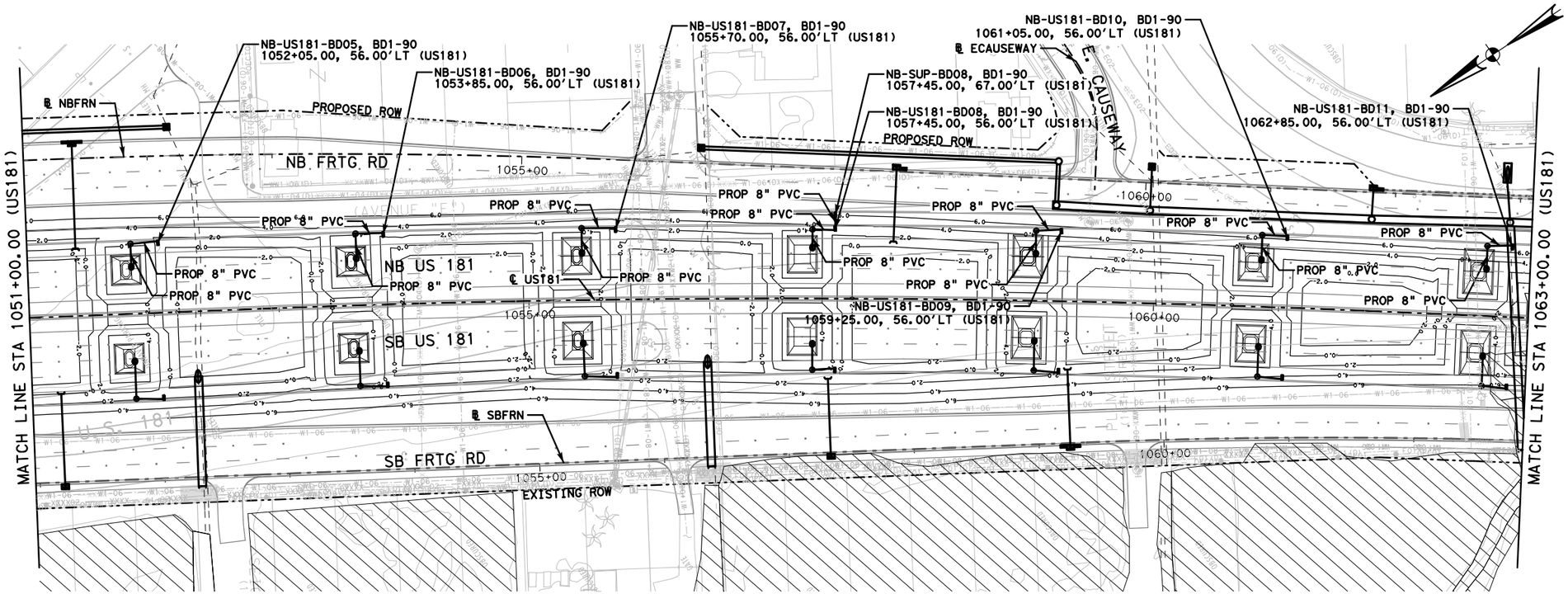

LEGEND

- 1.5" PFC
- RIPRAP
- DITCH
- PROPOSED MSE WALL
- EXISTING WETLANDS
- EXISTING STORM SEWER
- TBR — TO BE REMOVED
- INT — INTERCEPT EXISTING PIPE

NOTES:
1. DESIGN HGL WAS CALCULATED USING THE RINCON CHANNEL AVERAGE TIDEWATER ELEVATION OF +1.0' AS TAILWATER.
2. THE 10-YR TAILWATER (COSTAL FLOODING ELEVATION) IS +5.10'.

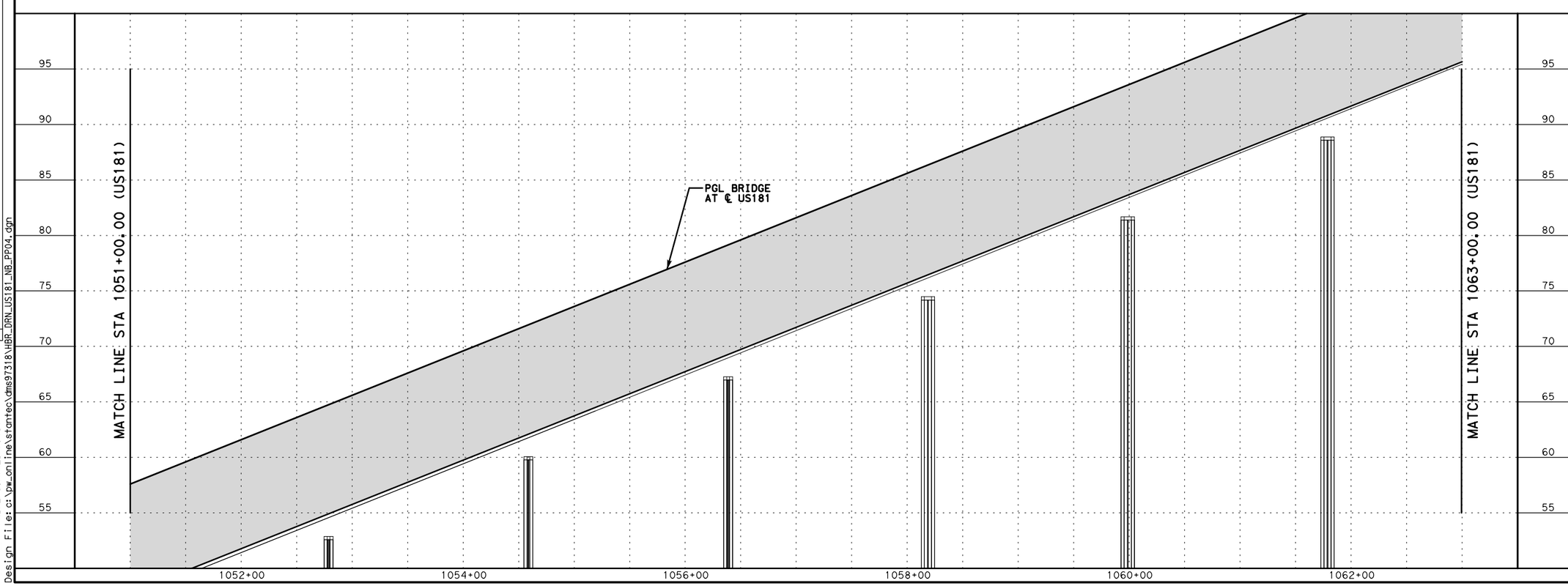

NO.	REVISIONS	BY	DATE

PRELIMINARY
FOR REVIEW ONLY
THESE DOCUMENTS ARE PRELIMINARY AND SUBJECT TO CHANGE. THEY ARE NOT INTENDED FOR CONSTRUCTION OR BIDDING. THEY WERE PREPARED BY, OR UNDER THE SUPERVISION OF:
Engineer: JACEK KWASNIEWSKI
P.E. No.: 95757
Date: 6/9/2017

RELEASE FOR CONSTRUCTION

US 181 HARBOR BRIDGE

DRAINAGE PLAN & PROFILE (US181) NORTH BOUND

STA 1051+00.00-STA 1063+00.00
SCALE: 1"=100'H
1"=10' V

FLATIRON/DRAGADOS LLC

Stantec
Engineered by Stantec Consulting Services Inc.
Texas Registered Engineering Firm F-6324

Texas Department of Transportation
© 2017
SHEET 4 OF 15

FED. RD. DIV. NO.	FEDERAL AID PROJECT NO.		SHEET NO.
6	HP X597(1)		DRN 021
STATE	STATE DIST. NO.	COUNTY	
TEXAS	CRP	NUECES	
CONT.	SECT	JOB	HIGHWAY NO.
0101	06	095	US181

PROJECT
US 181 HARBOR BRIDGE

Checked by: Date:
Back-Checked by: Date:
Corrected by: Date:
Verified by: Date:

☐ TxDOT
☐ Detail Check ☐ Internal Review ☐ Design Review
☐ Drawing ☐ Report ☐ Other: _____
Prepared By: Date:
☐ Drawing Checked Against Calculations ☐ Calculations Check Confirmed

REVIEW PHASE

Plotted: 6/9/2017 2:00:48 PM
Pen Table: HBR_Pack1A_DRN.tbl
Design File: c:\pw_online\stantec\dms97318\HBR_DRN_US181_NB_PP04.dgn

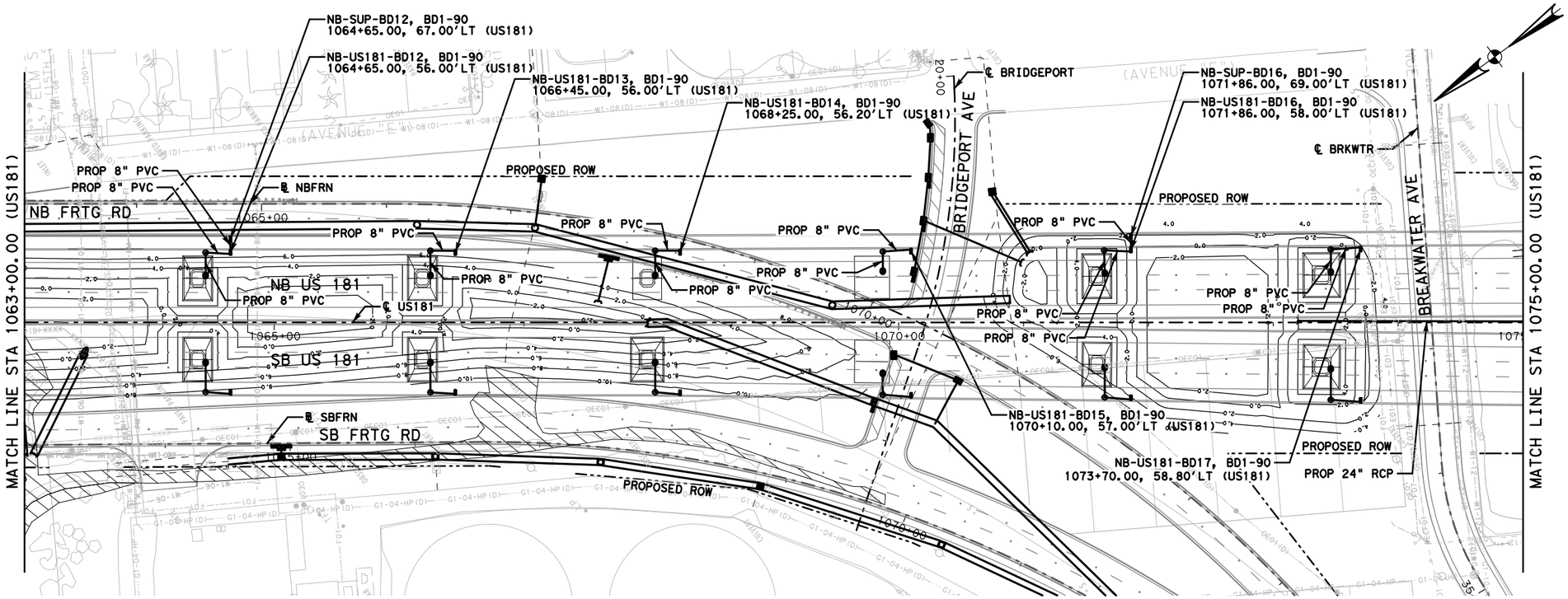

LEGEND

- 1.5" PFC
- RIPRAP
- DITCH
- PROPOSED MSE WALL
- EXISTING WETLANDS
- EXISTING STORM SEWER
- TBR — TO BE REMOVED
- INT — INTERCEPT EXISTING PIPE

NOTES:
1. DESIGN HGL WAS CALCULATED USING THE RINCON CHANNEL AVERAGE TIDEWATER ELEVATION OF +1.0' AS TAILWATER.
2. THE 10-YR TAILWATER (COSTAL FLOODING ELEVATION) IS +5.10'.

NO.	REVISIONS	BY	DATE

PRELIMINARY
FOR REVIEW ONLY
THESE DOCUMENTS ARE PRELIMINARY AND SUBJECT TO CHANGE. THEY ARE NOT INTENDED FOR CONSTRUCTION OR BIDDING. THEY WERE PREPARED BY, OR UNDER THE SUPERVISION OF:
Engineer: JACEK KWASNIEWSKI
P.E. No.: 95757
Date: 6/9/2017

RELEASE FOR CONSTRUCTION

US 181 HARBOR BRIDGE

DRAINAGE PLAN & PROFILE (US181) NORTH BOUND

STA 1063+00.00-STA 1075+00.00
SCALE: 1"=100'H
1"=10' V

FLATIRON/DRAGADOS LLC

Stantec
Engineered by Stantec Consulting Services Inc.
Texas Registered Engineering Firm F-6324

Texas Department of Transportation
© 2017

SHEET 5 OF 15

FED. RD. DIV. NO.	FEDERAL AID PROJECT NO.		SHEET NO.
6	HP X597(1)		DRN 022
STATE	STATE DIST. NO.	COUNTY	
TEXAS	CRP	NUECES	
CONT.	SECT	JOB	HIGHWAY NO.
0101	06	095	US181

PROJECT
US 181 HARBOR BRIDGE

Checked by: Date:
Back-Checked by: Date:
Corrected by: Date:
Verified by: Date:

☐ TxDOT
☐ Detail Check ☐ Internal Review ☐ Design Review
☐ Drawing ☐ Report ☐ Other:
Prepared By: Date:
☐ Drawing Checked Against Calculations ☐ Calculations Check Confirmed

REVIEW PHASE

Plotted: 6/9/2017 2:01:01 PM
Pen Table: HBR_Pack1A_DRN.tbl
Design File: c:\pw_online\stantec\dms97318\HBR_DRN_US181_NB_PP05.dgn

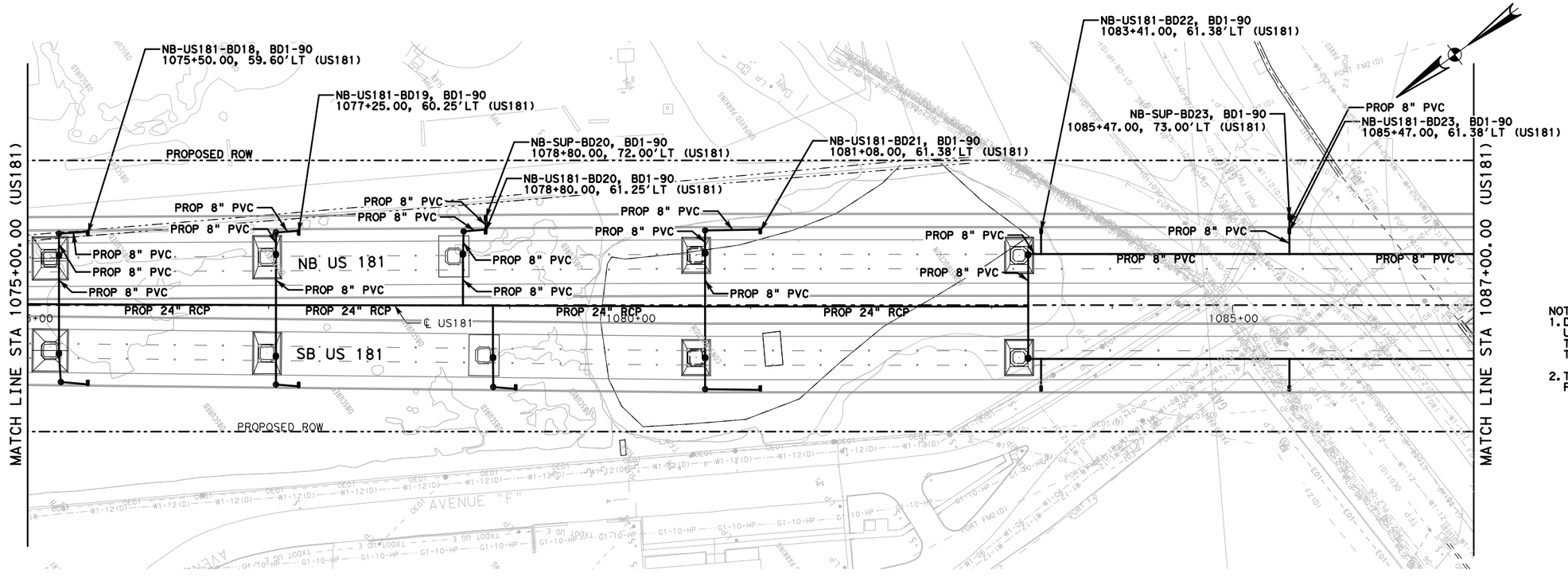

LEGEND

- 1.5" PFC
- RIPRAP
- DITCH
- PROPOSED MSE WALL
- EXISTING WETLANDS
- EXISTING STORM SEWER
- TBR — TO BE REMOVED
- INT — INTERCEPT EXISTING PIPE

NOTES:
1. DESIGN HGL WAS CALCULATED USING THE RINCON CHANNEL AVERAGE TIDEWATER ELEVATION OF +1.0' AS TAILWATER.
2. THE 10-YR TAILWATER (COSTAL FLOODING ELEVATION) IS +5.10'.

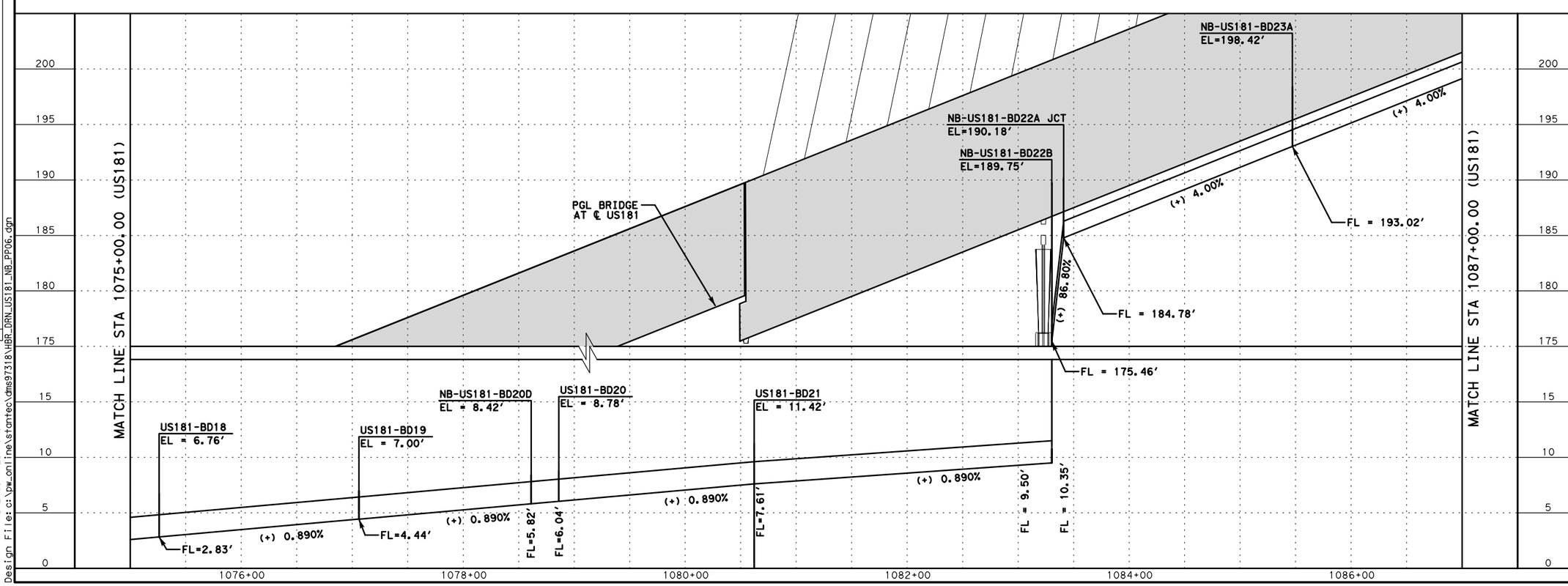

NO.	REVISIONS	BY	DATE

PRELIMINARY
FOR REVIEW ONLY
THESE DOCUMENTS ARE PRELIMINARY AND SUBJECT TO CHANGE. THEY ARE NOT INTENDED FOR CONSTRUCTION OR BIDDING. THEY WERE PREPARED BY, OR UNDER THE SUPERVISION OF:
Engineer: JACEK KWASNIEWSKI
P.E. No.: 95757
Date: 6/9/2017

RELEASE FOR CONSTRUCTION

US 181 HARBOR BRIDGE

DRAINAGE PLAN & PROFILE (US181) NORTH BOUND

STA 1075+00.00-STA 1087+00.00
SCALE: 1"=100'H
1"=10' V

FLATIRON/DRAGADOS LLC

Stantec
Engineered by Stantec Consulting Services Inc.
Texas Registered Engineering Firm F-6324

Texas Department of Transportation
© 2017
SHEET 6 OF 15

FED. RD. DIV. NO.	FEDERAL AID PROJECT NO.		SHEET NO.
6	HP X597(1)		DRN 023
STATE	STATE DIST. NO.	COUNTY	
TEXAS	CRP	NUECES	
CONT.	SECT	JOB	HIGHWAY NO.
0101	06	095	US181

PROJECT
US 181 HARBOR BRIDGE

Checked by: Date:
Back-Checked by: Date:
Corrected by: Date:
Verified by: Date:

☐ TxDOT
☐ Detail Check ☐ Internal Review ☐ Design Review
☐ Drawing ☐ Report ☐ Other:
Prepared By: Date:
☐ Drawing Checked Against Calculations ☐ Calculations Check Confirmed

REVIEW PHASE

Plotted: 6/9/2017 2:01:14 PM
Pen Table: HBR_Pack1A_DRN.tbl
Design File: c:\pw_online\stantec\dms97318\HBR_DRN_US181_NB_PP06.dgn

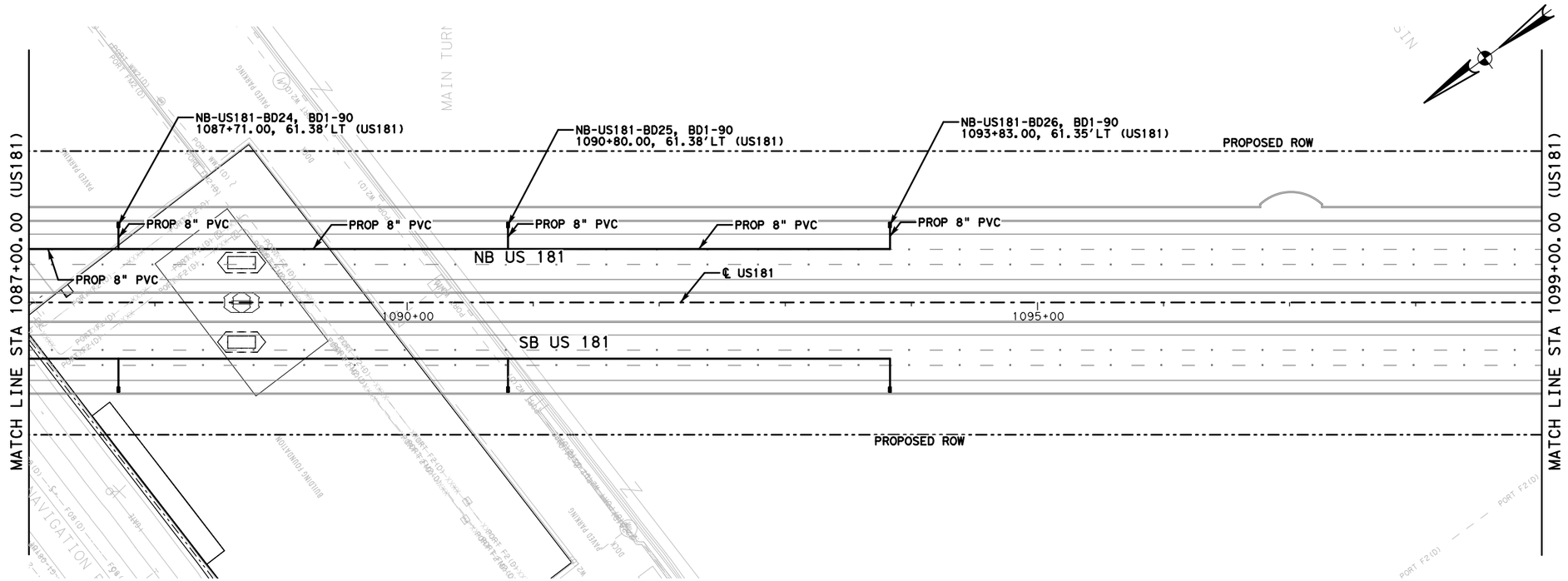

LEGEND

- 1.5" PFC
- RIPRAP
- DITCH
- PROPOSED MSE WALL
- EXISTING WETLANDS
- EXISTING STORM SEWER
- TBR — TO BE REMOVED
- INT — INTERCEPT EXISTING PIPE

NOTES:
1. DESIGN HGL WAS CALCULATED USING THE RINCON CHANNEL AVERAGE TIDEWATER ELEVATION OF +1.0' AS TAILWATER.
2. THE 10-YR TAILWATER (COSTAL FLOODING ELEVATION) IS +5.10'.

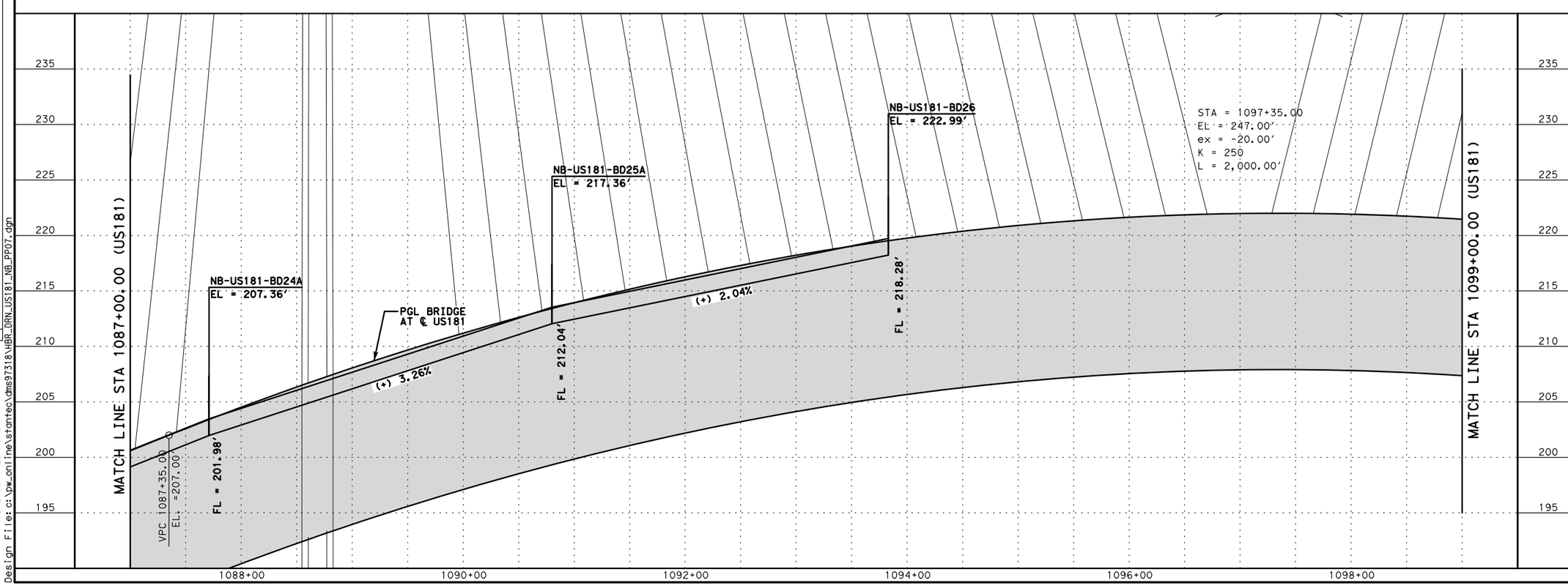

NO.	REVISIONS	BY	DATE

PRELIMINARY
FOR REVIEW ONLY
THESE DOCUMENTS ARE PRELIMINARY AND SUBJECT TO CHANGE. THEY ARE NOT INTENDED FOR CONSTRUCTION OR BIDDING. THEY WERE PREPARED BY, OR UNDER THE SUPERVISION OF:
Engineer: JACEK KWASNIEWSKI
P.E. No.: 95757
Date: 6/9/2017

RELEASE FOR CONSTRUCTION

US 181 HARBOR BRIDGE

DRAINAGE PLAN & PROFILE (US181) NORTH BOUND

STA 1087+00.00-STA 1099+00.00
SCALE: 1"=100'H
1"=10' V

FLATIRON/DRAGADOS LLC

Stantec
Engineered by Stantec Consulting Services Inc.
Texas Registered Engineering Firm F-6324

Texas Department of Transportation
© 2017

SHEET 7 OF 15

FED. RD. DIV. NO.	FEDERAL AID PROJECT NO.		SHEET NO.
6	HP X597(1)		DRN 024
STATE	STATE DIST. NO.	COUNTY	
TEXAS	CRP	NUECES	
CONT.	SECT	JOB	HIGHWAY NO.
0101	06	095	US181

PROJECT
US 181 HARBOR BRIDGE

Checked by: Date:
Back-Checked by: Date:
Corrected by: Date:
Verified by: Date:

☐ TxDOT
☐ Detail Check ☐ Internal Review ☐ Design Review
☐ Drawing ☐ Report ☐ Other:
Prepared By: Date:
☐ Drawing Checked Against Calculations ☐ Calculations Check Confirmed

REVIEW PHASE

Plotted: 6/9/2017 2:01:26 PM
Pen Table: HBR_Pack1A_DRN.tbl
Design File: c:\pw_online\stantec\dms97318\HBR_DRN_US181_NB_PP07.dgn

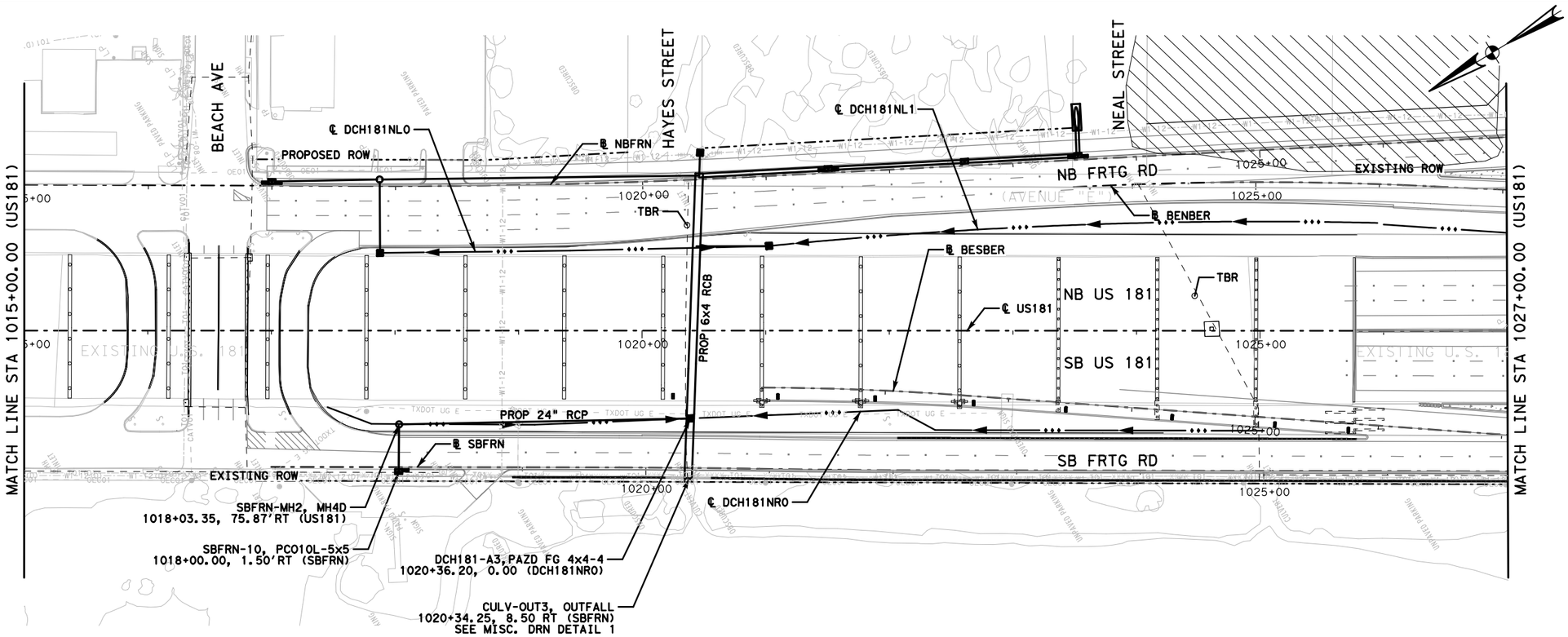

LEGEND

- 1.5" PFC
- RIPRAP
- DITCH
- PROPOSED MSE WALL
- EXISTING WETLANDS
- EXISTING STORM SEWER
- TBR — TO BE REMOVED
- INT — INTERCEPT EXISTING PIPE

NOTES:
1. DESIGN HGL WAS CALCULATED USING THE RINCON CHANNEL AVERAGE TIDEWATER ELEVATION OF +1.0' AS TAILWATER.
2. THE 10-YR TAILWATER (COSTAL FLOODING ELEVATION) IS +5.10'.

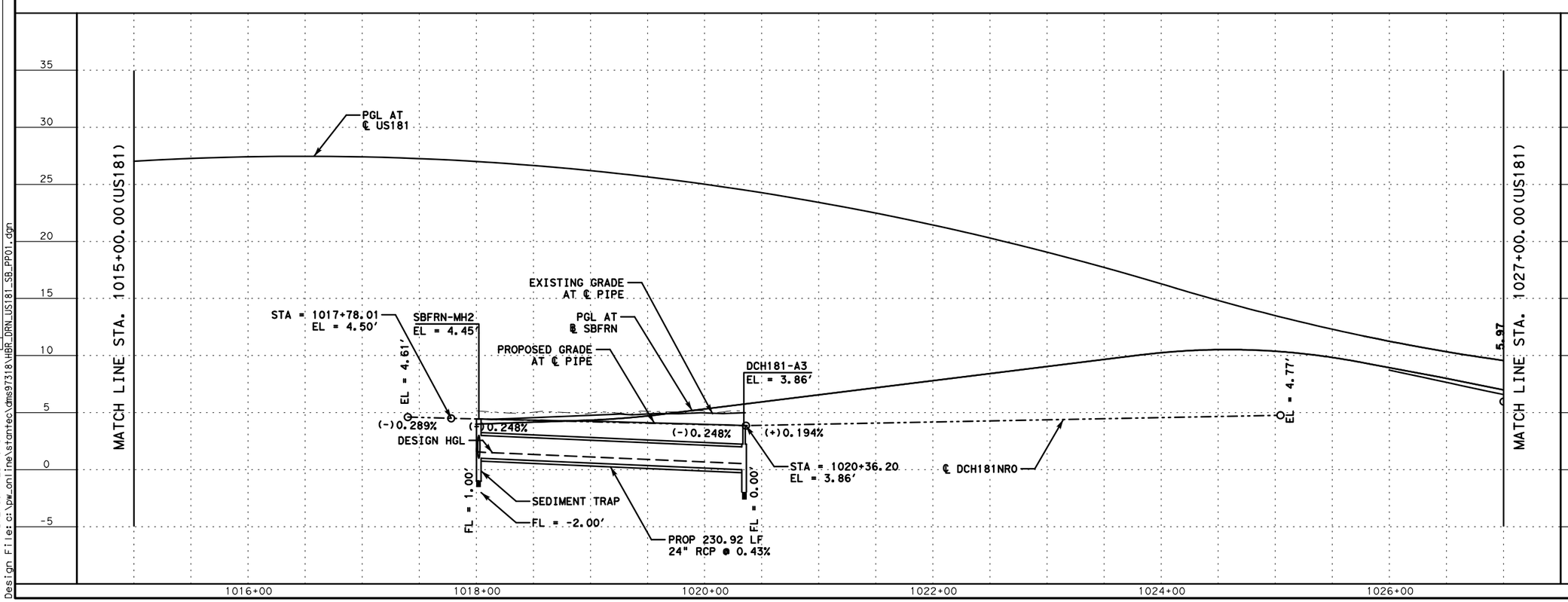

NO.	REVISIONS	BY	DATE

PRELIMINARY
FOR REVIEW ONLY
THESE DOCUMENTS ARE PRELIMINARY AND SUBJECT TO CHANGE. THEY ARE NOT INTENDED FOR CONSTRUCTION OR BIDDING. THEY WERE PREPARED BY, OR UNDER THE SUPERVISION OF:
Engineer: JACEK KWASNIEWSKI
P.E. No.: 95757
Date: 6/9/2017

RELEASE FOR CONSTRUCTION

US 181 HARBOR BRIDGE

DRAINAGE PLAN & PROFILE (US181) SOUTH BOUND

STA 1015+00.0-STA 1027+00.0
SCALE: 1"=100' H
1"=10' V

FLATIRON/DRAGADOS LLC

Stantec
Engineered by Stantec Consulting Services Inc.
Texas Registered Engineering Firm F-6324

Texas Department of Transportation
© 2017

SHEET 1 OF 15

FED. RD. DIV. NO.	FEDERAL AID PROJECT NO.		SHEET NO.
6	HP X597(1)		DRN 025
STATE	STATE DIST. NO.	COUNTY	
TEXAS	CRP	NUECES	
CONT.	SECT	JOB	HIGHWAY NO.
0101	06	095	US181

PROJECT
US 181 HARBOR BRIDGE

Checked by: Date:
Back-Checked by: Date:
Corrected by: Date:
Verified by: Date:

☐ Detail Check ☐ Internal Review ☐ Design Review ☐ TxDOT
☐ Drawing ☐ Report ☐ Other:
Prepared By: Date:
☐ Drawing Checked Against Calculations ☐ Calculations Check Confirmed

REVIEW PHASE

Plotted: 6/9/2017 2:01:39 PM
Pen Table: HBR_Pack1A_DRN.tbl
Design File: c:\pw_online\stantec\dms97318\HBR_DRN_US181_SB_PP01.dgn

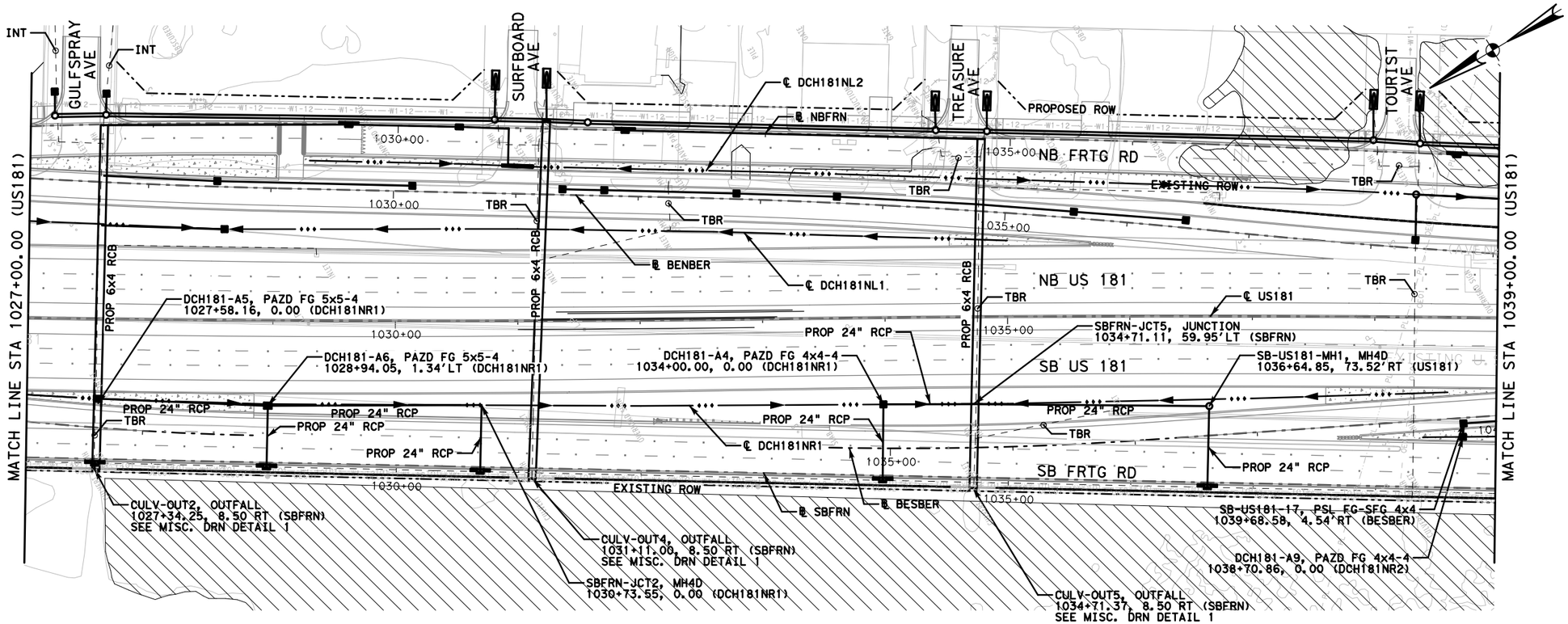

LEGEND

- 1.5" PFC
- RIPRAP
- DITCH
- PROPOSED MSE WALL
- EXISTING WETLANDS
- EXISTING STORM SEWER
- TBR — TO BE REMOVED
- INT — INTERCEPT EXISTING PIPE

NOTES:
1. DESIGN HGL WAS CALCULATED USING THE RINCON CHANNEL AVERAGE TIDEWATER ELEVATION OF +1.0' AS TAILWATER.
2. THE 10-YR TAILWATER (COSTAL FLOODING ELEVATION) IS +5.10'.

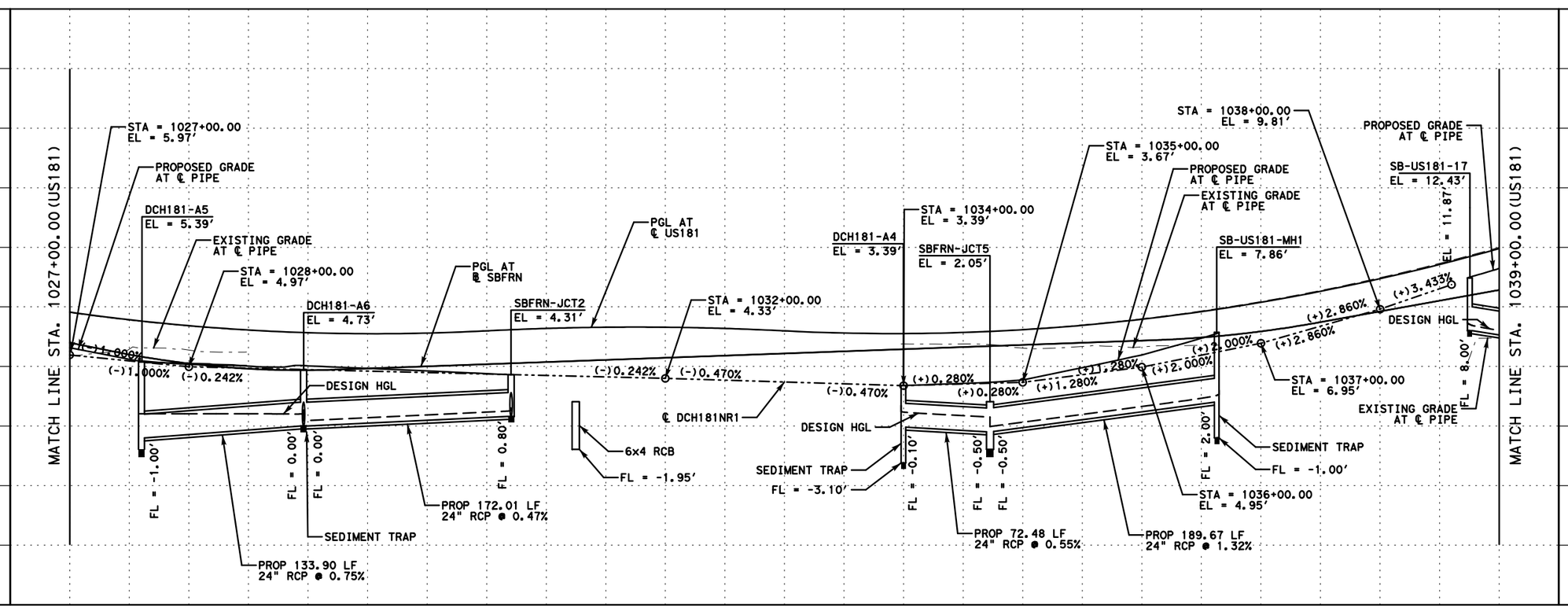

NO.	REVISIONS	BY	DATE

PRELIMINARY
FOR REVIEW ONLY
THESE DOCUMENTS ARE PRELIMINARY AND SUBJECT TO CHANGE. THEY ARE NOT INTENDED FOR CONSTRUCTION OR BIDDING. THEY WERE PREPARED BY, OR UNDER THE SUPERVISION OF:
Engineer: JACEK KWASNIEWSKI
P.E. No.: 95757
Date: 6/9/2017

RELEASE FOR CONSTRUCTION

US 181 HARBOR BRIDGE

DRAINAGE PLAN & PROFILE (US181) SOUTH BOUND

STA 1027+00.0-STA 1039+00.0
SCALE: 1"=100' H
1"=10' V

FLATIRON/DRAGADOS LLC

Stantec
Engineered by Stantec Consulting Services Inc.
Texas Registered Engineering Firm F-6324

Texas Department of Transportation
© 2017
SHEET 2 OF 15

FED. RD. DIV. NO.	FEDERAL AID PROJECT NO.		SHEET NO.
6	HP X597(1)		DRN 026
STATE	STATE DIST. NO.	COUNTY	
TEXAS	CRP	NUECES	
CONT.	SECT	JOB	HIGHWAY NO.
0101	06	095	US181

PROJECT
US 181 HARBOR BRIDGE

Checked by: Date:
Back-Checked by: Date:
Corrected by: Date:
Verified by: Date:

☐ Detail Check ☐ Internal Review ☐ Design Review ☐ TxDOT
☐ Drawing ☐ Report ☐ Other:
Prepared By: Date:
☐ Drawing Checked Against Calculations ☐ Calculations Check Confirmed

REVIEW PHASE

Plotted: 6/9/2017 2:01:54 PM
Pen Table: HBR_Pack1A_DRN.tbl
Design File: c:\pw_online\stantec\dms97318\HBR_DRN_US181_SB_PP02.dgn

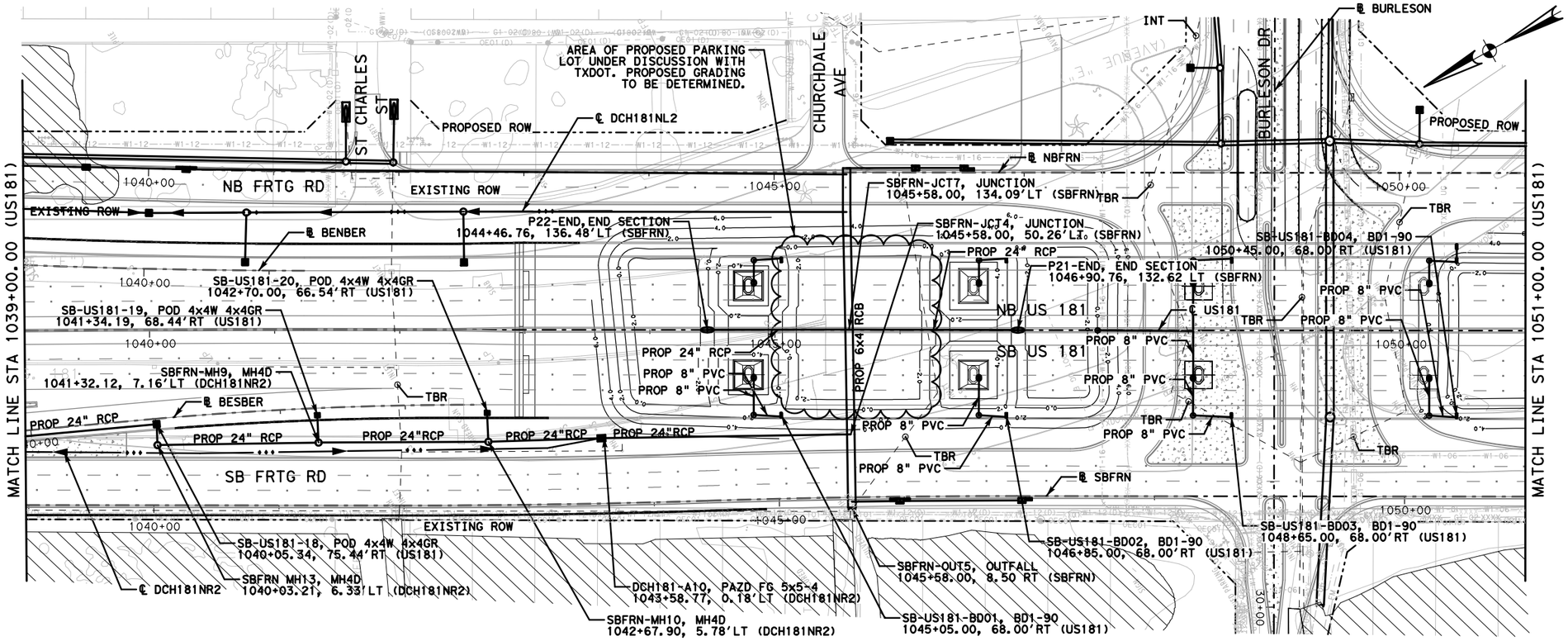

LEGEND

- 1.5" PFC
- RIPRAP
- DITCH
- PROPOSED MSE WALL
- EXISTING WETLANDS
- EXISTING STORM SEWER
- TBR — TO BE REMOVED
- INT — INTERCEPT EXISTING PIPE

NOTES:
1. DESIGN HGL WAS CALCULATED USING THE RINCON CHANNEL AVERAGE TIDEWATER ELEVATION OF +1.0' AS TAILWATER.
2. THE 10-YR TAILWATER (COSTAL FLOODING ELEVATION) IS +5.10'.

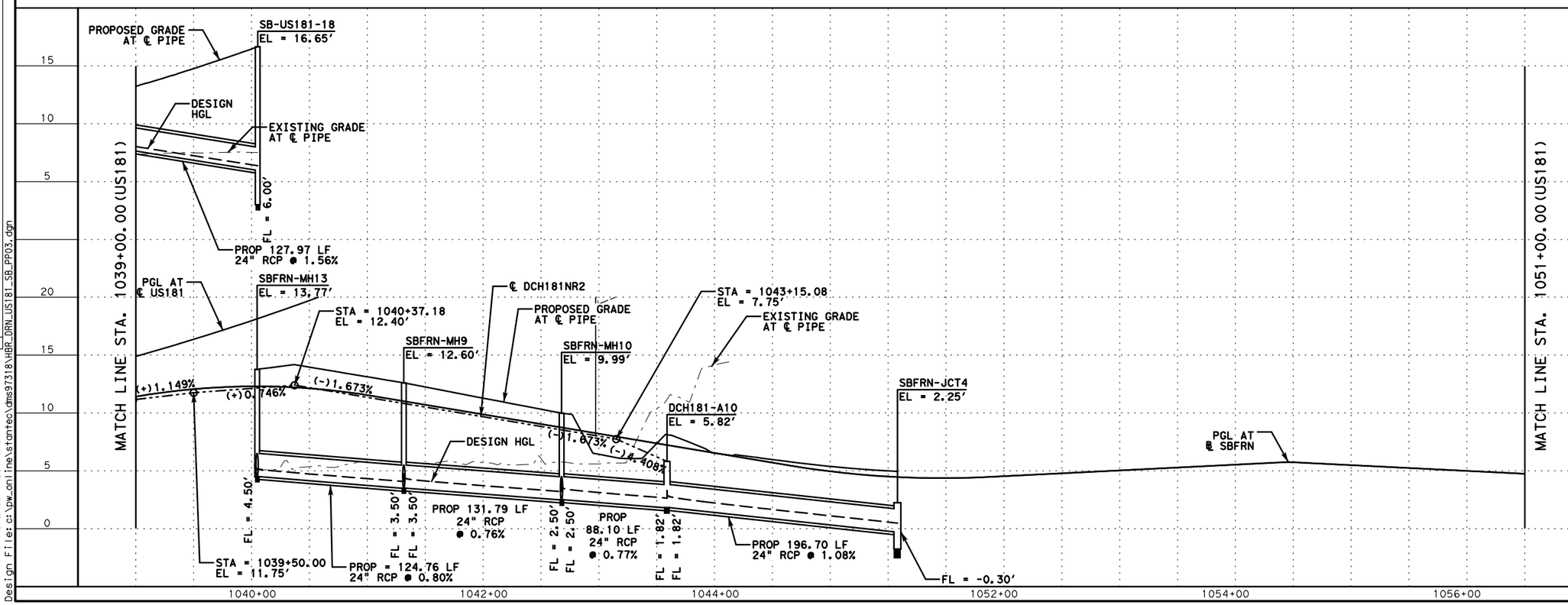

NO.	REVISIONS	BY	DATE

PRELIMINARY
FOR REVIEW ONLY
THESE DOCUMENTS ARE PRELIMINARY AND SUBJECT TO CHANGE. THEY ARE NOT INTENDED FOR CONSTRUCTION OR BIDDING. THEY WERE PREPARED BY, OR UNDER THE SUPERVISION OF:
Engineer: JACEK KWASNIEWSKI
P.E. No.: 95757
Date: 6/9/2017

RELEASE FOR CONSTRUCTION

US 181 HARBOR BRIDGE

DRAINAGE PLAN & PROFILE (US181) SOUTH BOUND

STA 1039+00.0-STA 1051+00.0
SCALE: 1"=100'H
1"=10' V

FLATIRON/DRAGADOS LLC

Stantec
Engineered by Stantec Consulting Services Inc.
Texas Registered Engineering Firm F-6324

Texas Department of Transportation
© 2017
SHEET 3 OF 15

FED. RD. DIV. NO.	FEDERAL AID PROJECT NO.	SHEET NO.
6	HP X597(1)	DRN 027

STATE	STATE DIST. NO.	COUNTY	
TEXAS	CRP	NUECES	
CONT.	SECT	JOB	HIGHWAY NO.
0101	06	095	US181

PROJECT: US 181 HARBOR BRIDGE

REVIEW PHASE: ☐ Detail Check ☐ Internal Review ☐ Design Review ☐ TxDOT ☐ Drawing ☐ Report ☐ Other:

Prepared By: Date:
☐ Drawing Checked Against Calculations ☐ Calculations Check Confirmed

Checked by: Date:
Back-Checked by: Date:
Corrected by: Date:
Verified by: Date:

Plotted: 6/9/2017 2:02:09 PM
Pen Table: HBR_Pack1A_DRN.tbl
Design Files: c:\pw_online\stantec\dms97318\HBR_DRN_US181_SB_PP03.dgn

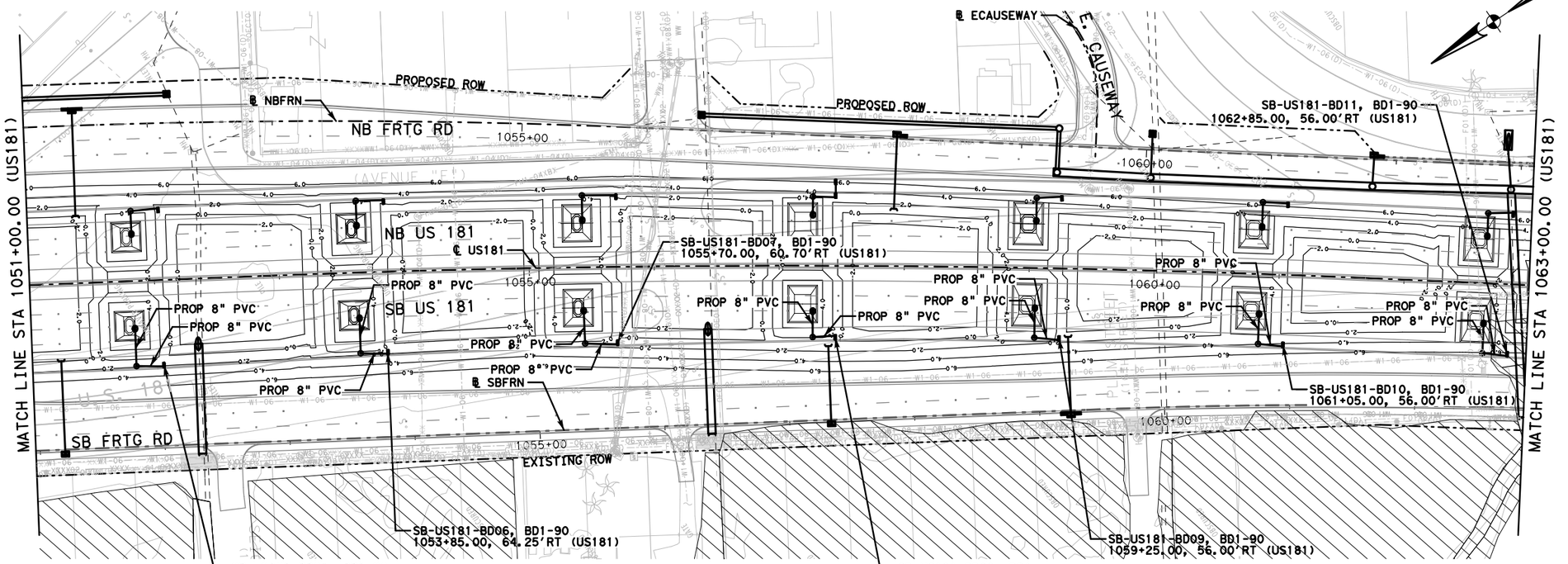

LEGEND

- 1.5" PFC
- RIPRAP
- DITCH
- PROPOSED MSE WALL
- EXISTING WETLANDS
- EXISTING STORM SEWER
- TBR — TO BE REMOVED
- INT — INTERCEPT EXISTING PIPE

NOTES:
1. DESIGN HGL WAS CALCULATED USING THE RINCON CHANNEL AVERAGE TIDEWATER ELEVATION OF +1.0' AS TAILWATER.
2. THE 10-YR TAILWATER (COSTAL FLOODING ELEVATION) IS +5.10'.

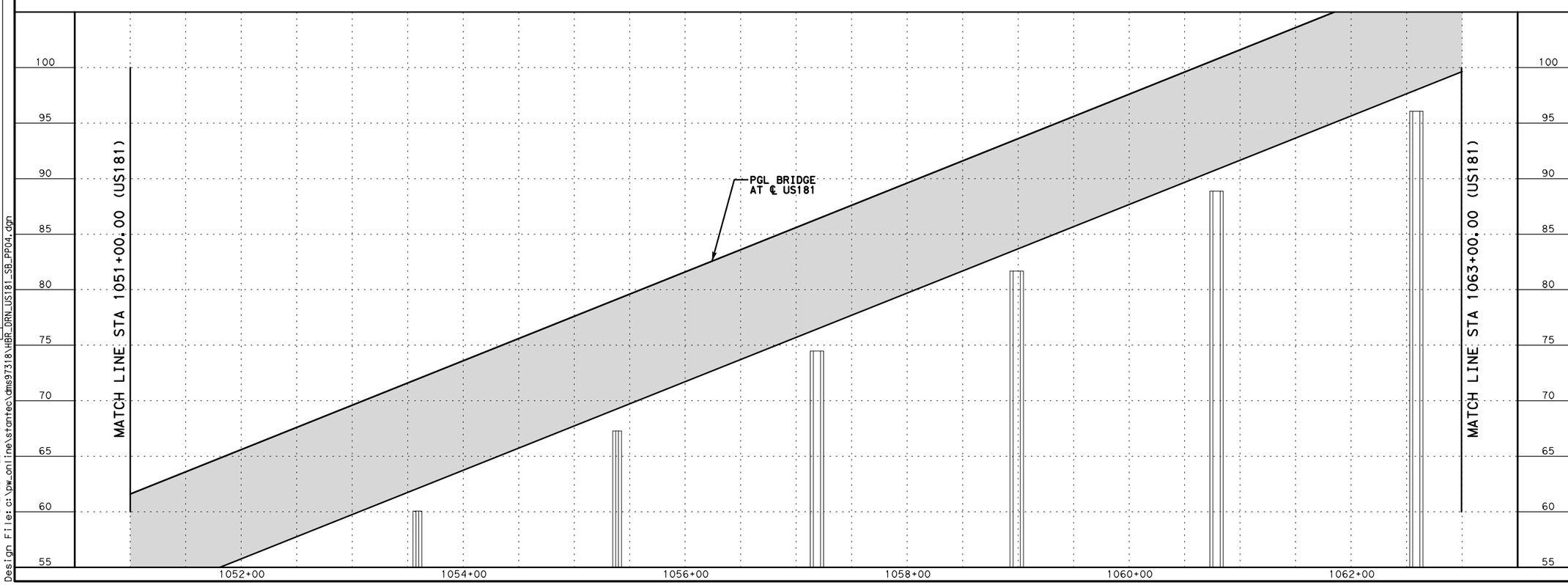

NO.	REVISIONS	BY	DATE

PRELIMINARY
FOR REVIEW ONLY
THESE DOCUMENTS ARE PRELIMINARY AND SUBJECT TO CHANGE. THEY ARE NOT INTENDED FOR CONSTRUCTION OR BIDDING. THEY WERE PREPARED BY, OR UNDER THE SUPERVISION OF:
Engineer: JACEK KWASNIEWSKI
P.E. No.: 95757
Date: 6/9/2017

RELEASE FOR CONSTRUCTION

US 181 HARBOR BRIDGE

DRAINAGE PLAN & PROFILE (US181) SOUTH BOUND

STA 1051+00.00-STA 1063+00.00
SCALE: 1"=100' H
1"=10' V

FLATIRON/DRAGADOS LLC

Stantec
Engineered by Stantec Consulting Services Inc.
Texas Registered Engineering Firm F-6324

Texas Department of Transportation
© 2017
SHEET 4 OF 15

FED. RD. DIV. NO.	FEDERAL AID PROJECT NO.		SHEET NO.
6	HP X597(1)		DRN 028
STATE	STATE DIST. NO.	COUNTY	
TEXAS	CRP	NUECES	
CONT.	SECT	JOB	HIGHWAY NO.
0101	06	095	US181

PROJECT: US 181 HARBOR BRIDGE

Checked by: Date:
Back-Checked by: Date:
Corrected by: Date:
Verified by: Date:

REVIEW PHASE: ☐ Detail Check ☐ Internal Review ☐ Design Review ☐ TxDOT ☐ Drawing ☐ Report ☐ Other:

Prepared By: Date:
☐ Drawing Checked Against Calculations ☐ Calculations Check Confirmed

Plotted: 6/9/2017 2:02:23 PM
Pen Table: HBR_Pack1A_DRN.tbl
Design File: c:\pw_online\stantec\dms97318\HBR_DRN_US181_SB_PP04.dgn

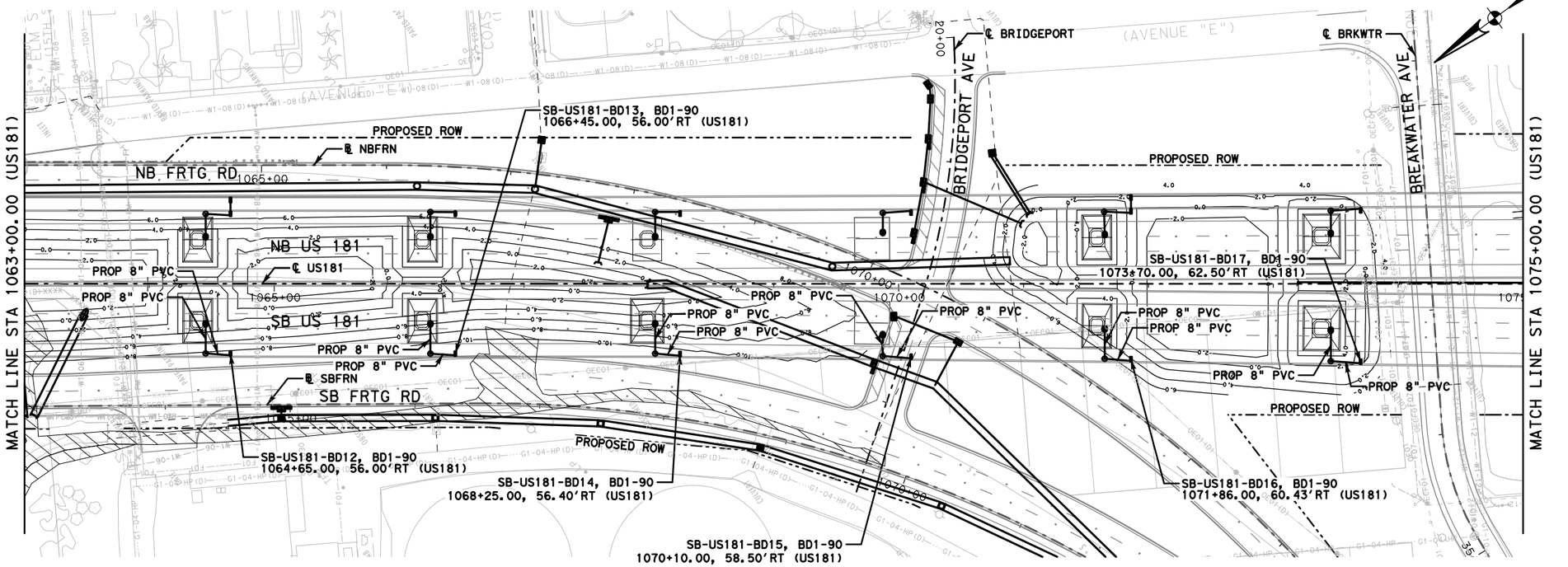

LEGEND

- 1.5" PFC
- RIPRAP
- DITCH
- PROPOSED MSE WALL
- EXISTING WETLANDS
- EXISTING STORM SEWER
- TBR — TO BE REMOVED
- INT — INTERCEPT EXISTING PIPE

NOTES:
1. DESIGN HGL WAS CALCULATED USING THE RINCON CHANNEL AVERAGE TIDEWATER ELEVATION OF +1.0' AS TAILWATER.
2. THE 10-YR TAILWATER (COSTAL FLOODING ELEVATION) IS +5.10'.

NO.	REVISIONS	BY	DATE

PRELIMINARY
FOR REVIEW ONLY
THESE DOCUMENTS ARE PRELIMINARY AND SUBJECT TO CHANGE. THEY ARE NOT INTENDED FOR CONSTRUCTION OR BIDDING. THEY WERE PREPARED BY, OR UNDER THE SUPERVISION OF:
Engineer: JACEK KWASNIEWSKI
P.E. No.: 95757
Date: 6/9/2017

RELEASE FOR CONSTRUCTION

US 181 HARBOR BRIDGE

DRAINAGE PLAN & PROFILE (US181) SOUTH BOUND

STA 1063+00.00-STA 1075+00.00
SCALE: 1"=100'H
1"=10' V

FLATIRON/DRAGADOS LLC

Stantec
Engineered by Stantec Consulting Services Inc.
Texas Registered Engineering Firm F-6324

Texas Department of Transportation
© 2017
SHEET 5 OF 15

FED. RD. DIV. NO.	FEDERAL AID PROJECT NO.		SHEET NO.
6	HP X597(1)		DRN 029
STATE	STATE DIST. NO.	COUNTY	
TEXAS	CRP	NUECES	
CONT.	SECT	JOB	HIGHWAY NO.
0101	06	095	US181

PROJECT
US 181 HARBOR BRIDGE

Checked by: Date:
Back-Checked by: Date:
Corrected by: Date:
Verified by: Date:

☐ Detail Check ☐ Internal Review ☐ Design Review ☐ TxDOT
☐ Drawing ☐ Report ☐ Other:
Prepared By: Date:
☐ Drawing Checked Against Calculations ☐ Calculations Check Confirmed

REVIEW PHASE

Plotted: 6/9/2017 2:02:37 PM
Pen Table: HBR_Pack1A_DRN.tbl
Design File: c:\pw_online\stantec\dms97318\HBR_DRN_US181_SB_PP05.dgn

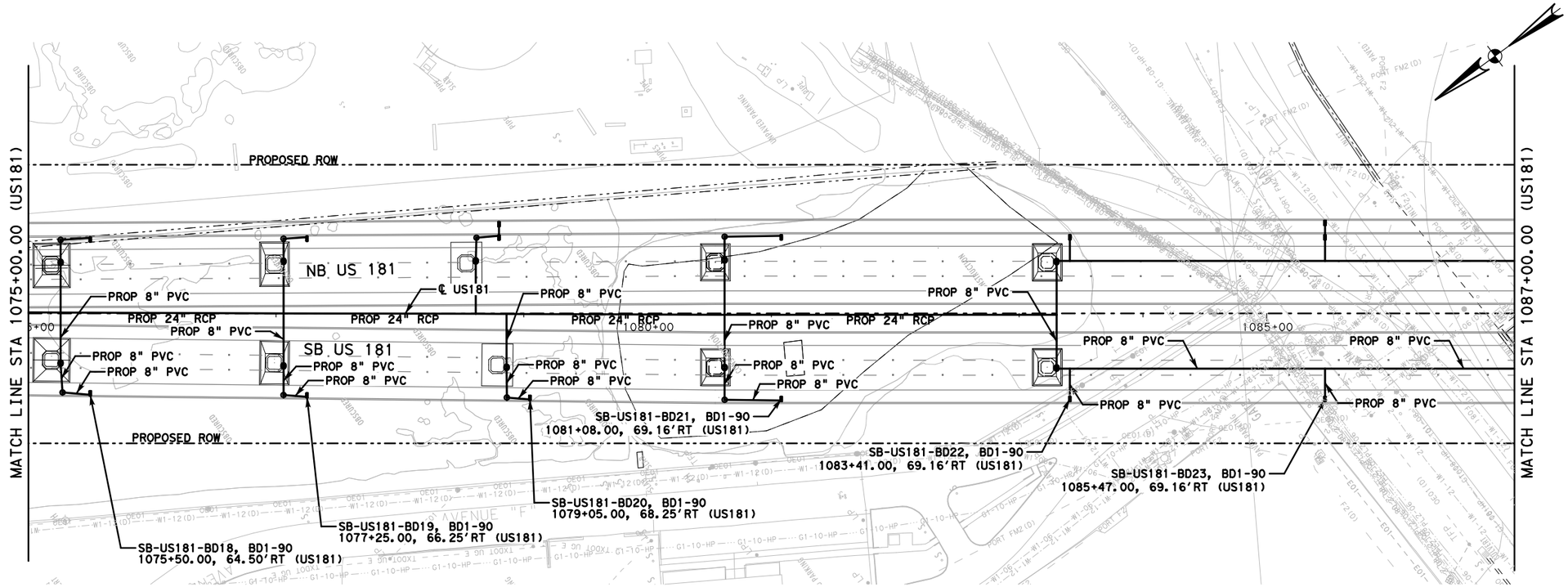

LEGEND

- 1.5" PFC
- RIPRAP
- DITCH
- PROPOSED MSE WALL
- EXISTING WETLANDS
- EXISTING STORM SEWER
- TBR — TO BE REMOVED
- INT — INTERCEPT EXISTING PIPE

NOTES:
1. DESIGN HGL WAS CALCULATED USING THE RINCON CHANNEL AVERAGE TIDEWATER ELEVATION OF +1.0' AS TAILWATER.
2. THE 10-YR TAILWATER (COSTAL FLOODING ELEVATION) IS +5.10'.

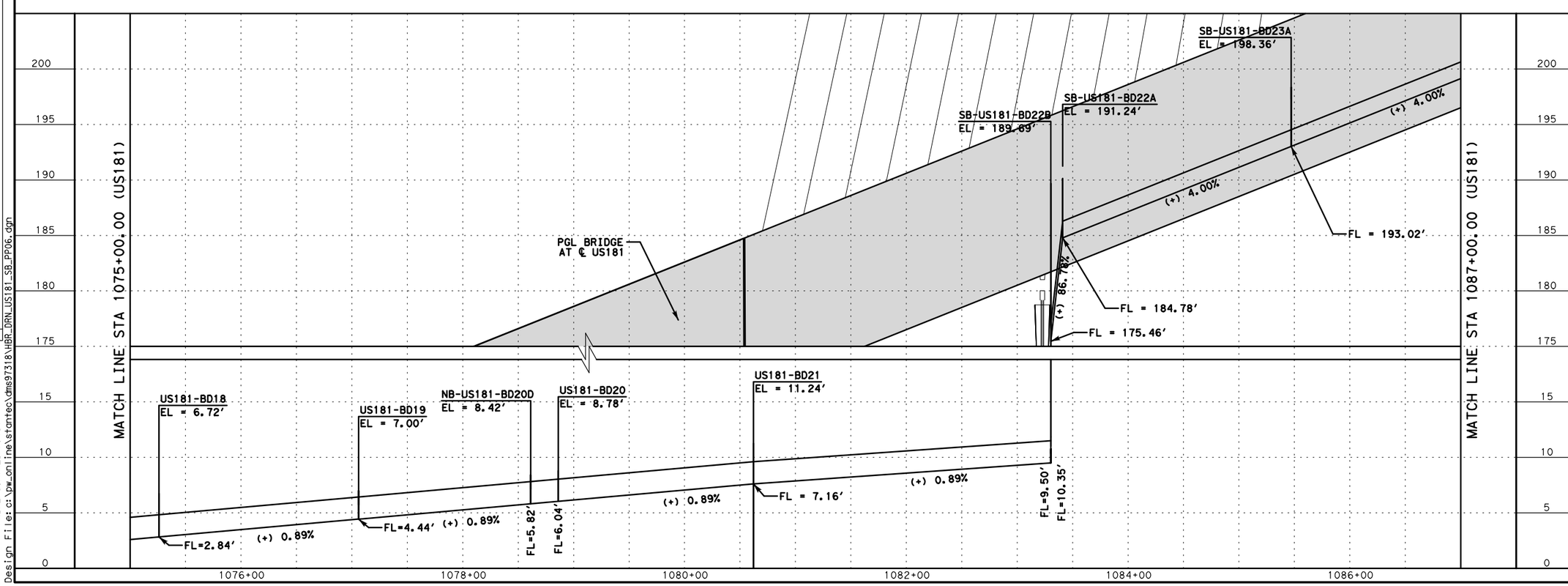

NO.	REVISIONS	BY	DATE

PRELIMINARY
FOR REVIEW ONLY
THESE DOCUMENTS ARE PRELIMINARY AND SUBJECT TO CHANGE. THEY ARE NOT INTENDED FOR CONSTRUCTION OR BIDDING. THEY WERE PREPARED BY, OR UNDER THE SUPERVISION OF:
Engineer: JACEK KWASNIEWSKI
P.E. No.: 95757
Date: 6/9/2017

RELEASE FOR CONSTRUCTION

US 181 HARBOR BRIDGE

DRAINAGE PLAN & PROFILE (US181) SOUTH BOUND

STA 1075+00.00-STA 1087+00.00
SCALE: 1"=100'H
1"=10' V

FLATIRON/DRAGADOS LLC

Stantec
Engineered by Stantec Consulting Services Inc.
Texas Registered Engineering Firm F-6324

Texas Department of Transportation
© 2017
SHEET 6 OF 15

FED. RD. DIV. NO.	FEDERAL AID PROJECT NO.		SHEET NO.
6	HP X597(1)		DRN 030
STATE	STATE DIST. NO.	COUNTY	
TEXAS	CRP	NUECES	
CONT.	SECT	JOB	HIGHWAY NO.
0101	06	095	US181

PROJECT
US 181 HARBOR BRIDGE

Checked by: Date:
Back-Checked by: Date:
Corrected by: Date:
Verified by: Date:

☐ Detail Check ☐ Internal Review ☐ Design Review ☐ TxDOT
☐ Drawing ☐ Report ☐ Other:
Prepared By: Date:
☐ Drawing Checked Against Calculations ☐ Calculations Check Confirmed

REVIEW PHASE

Plotted: 6/9/2017 2:02:50 PM
Pen Table: HBR_Pack1A_DRN.tbl
Design File: c:\pw_online\stantec\dms97318\HBR_DRN_US181_SB_PP06.dgn

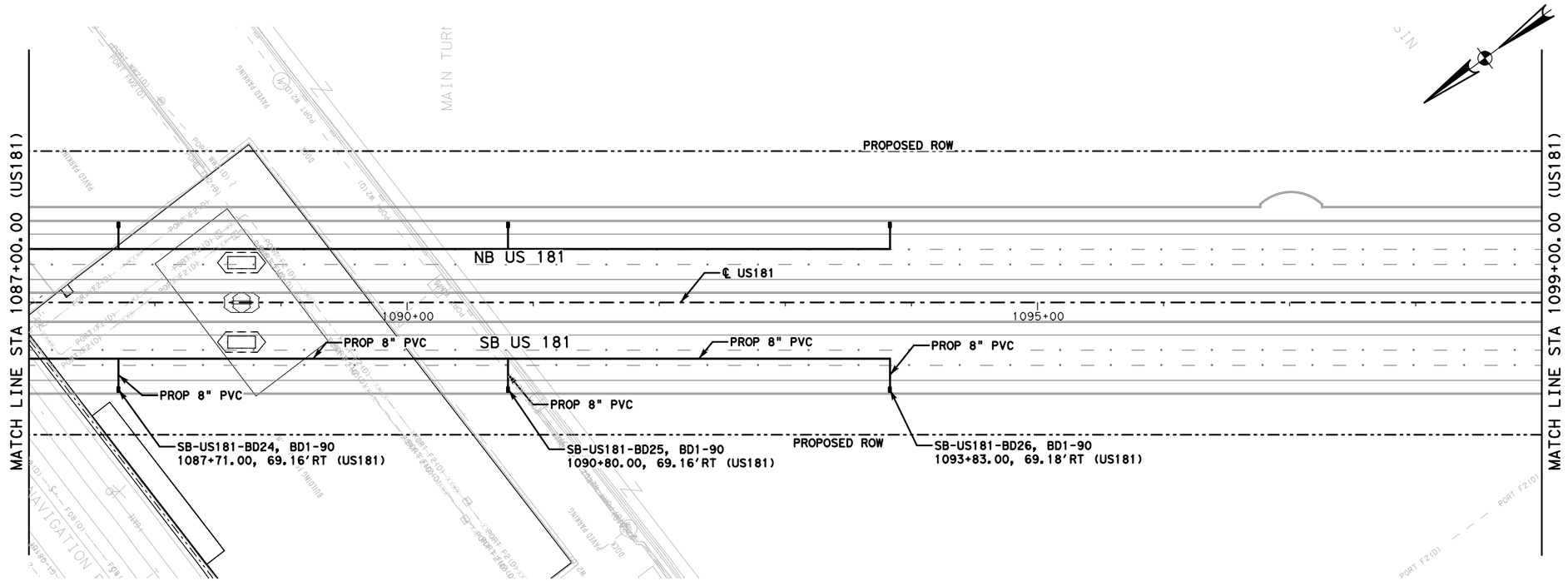

LEGEND

- 1.5" PFC
- RIPRAP
- DITCH
- PROPOSED MSE WALL
- EXISTING WETLANDS
- EXISTING STORM SEWER
- TBR — TO BE REMOVED
- INT — INTERCEPT EXISTING PIPE

NOTES:
1. DESIGN HGL WAS CALCULATED USING THE RINCON CHANNEL AVERAGE TIDEWATER ELEVATION OF +1.0' AS TAILWATER.
2. THE 10-YR TAILWATER (COSTAL FLOODING ELEVATION) IS +5.10'.

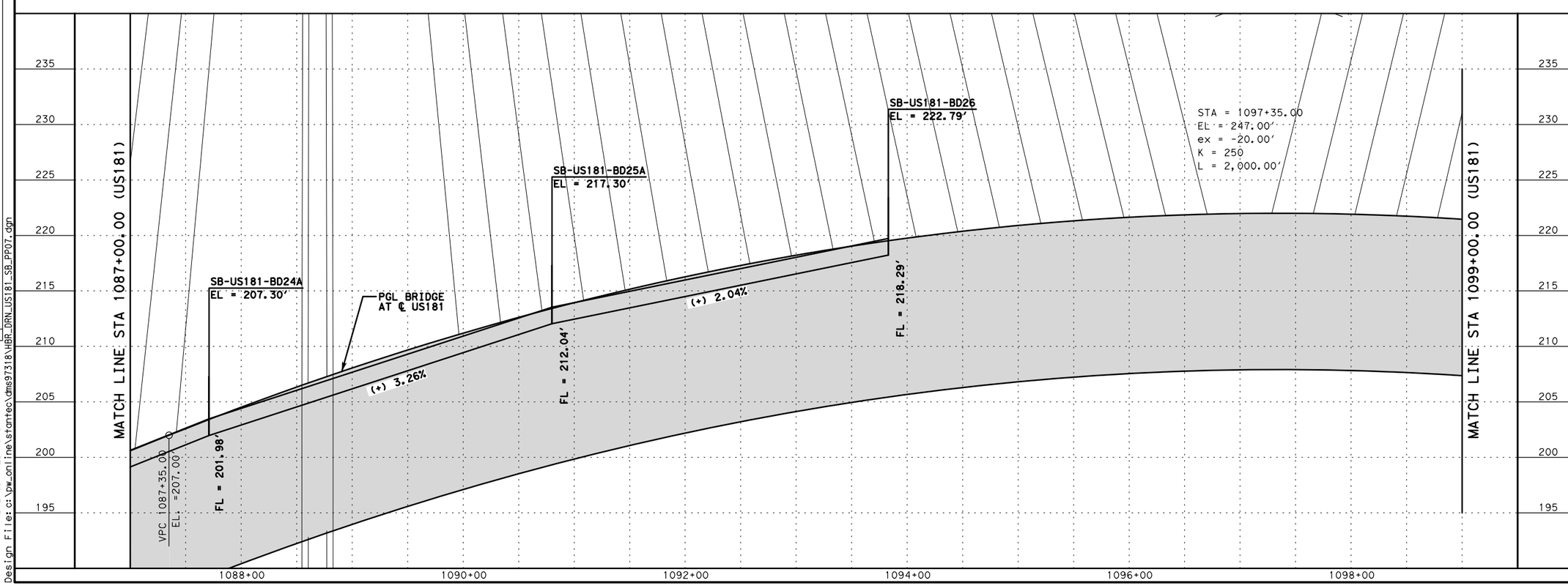

NO.	REVISIONS	BY	DATE

PRELIMINARY
FOR REVIEW ONLY
THESE DOCUMENTS ARE PRELIMINARY AND SUBJECT TO CHANGE. THEY ARE NOT INTENDED FOR CONSTRUCTION OR BIDDING. THEY WERE PREPARED BY, OR UNDER THE SUPERVISION OF:
Engineer: JACEK KWASNIEWSKI
P.E. No.: 95757
Date: 6/9/2017

RELEASE FOR CONSTRUCTION

US 181 HARBOR BRIDGE

DRAINAGE PLAN & PROFILE (US181) SOUTH BOUND

STA 1087+00.00-STA 1099+00.00
SCALE: 1"=100'H
1"=10' V

FLATIRON/DRAGADOS LLC

Stantec
Engineered by Stantec Consulting Services Inc.
Texas Registered Engineering Firm F-6324

Texas Department of Transportation
© 2017

SHEET 7 OF 15

FED. RD. DIV. NO.	FEDERAL AID PROJECT NO.		SHEET NO.
6	HP X597(1)		DRN 031
STATE	STATE DIST. NO.	COUNTY	
TEXAS	CRP	NUECES	
CONT.	SECT	JOB	HIGHWAY NO.
0101	06	095	US181

PROJECT
US 181 HARBOR BRIDGE

Checked by: Date:
Back-Checked by: Date:
Corrected by: Date:
Verified by: Date:

☐ TxDOT
☐ Detail Check ☐ Internal Review ☐ Design Review
☐ Drawing ☐ Report ☐ Other:
Prepared By: Date:
☐ Drawing Checked Against Calculations ☐ Calculations Check Confirmed

REVIEW PHASE

Plotted: 6/9/2017 2:03:04 PM
Pen Table: HBR_Pack1A_DRN.tbl
Design File: c:\pw_online\stantec\dms97318\HBR_DRN_US181_SB_PP07.dgn

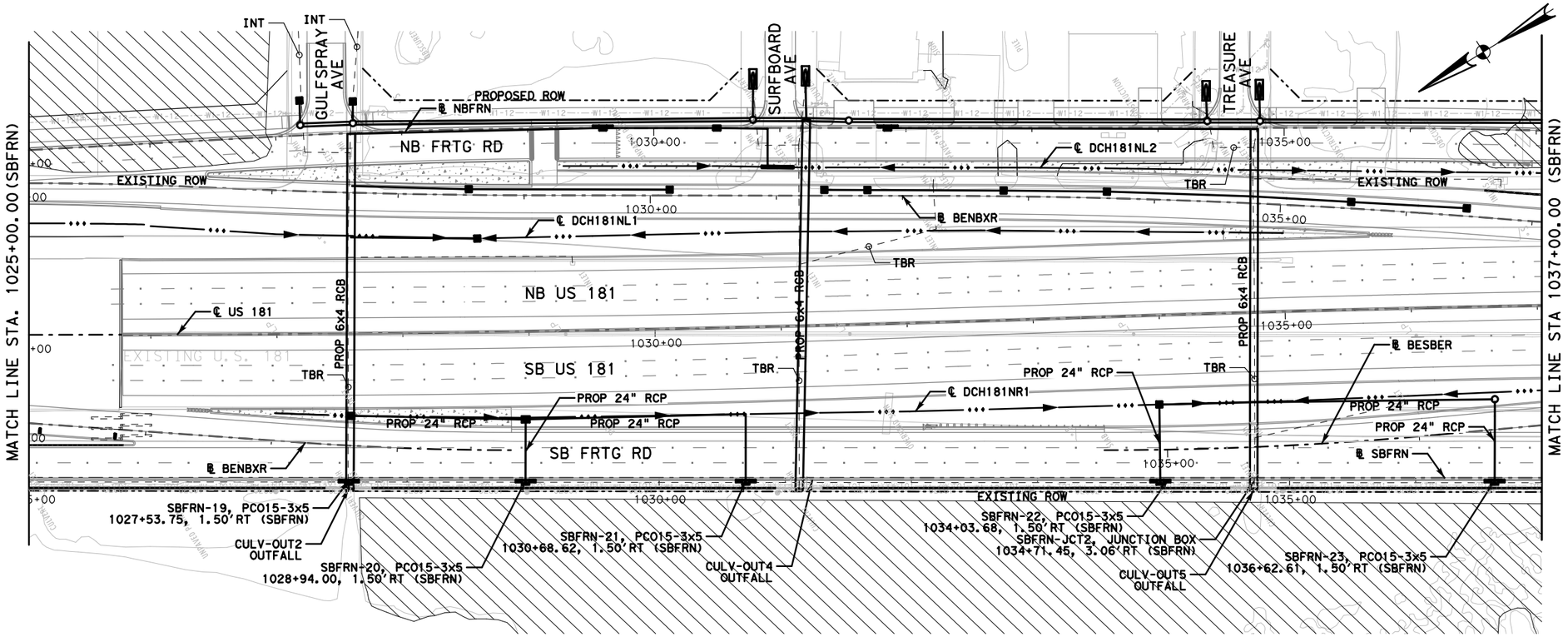

LEGEND

	1.5" PFC
	RIPRAP
	DITCH
	PROPOSED MSE WALL
	EXISTING WETLANDS
- - - -	EXISTING STORM SEWER
TBR	TO BE REMOVED
INT	INTERCEPT EXISTING PIPE

NOTES:
1. DESIGN HGL WAS CALCULATED USING THE RINCON CHANNEL AVERAGE TIDEWATER ELEVATION OF +1.0' AS TAILWATER.
2. THE 10-YR TAILWATER (COSTAL FLOODING ELEVATION) IS +5.10'.

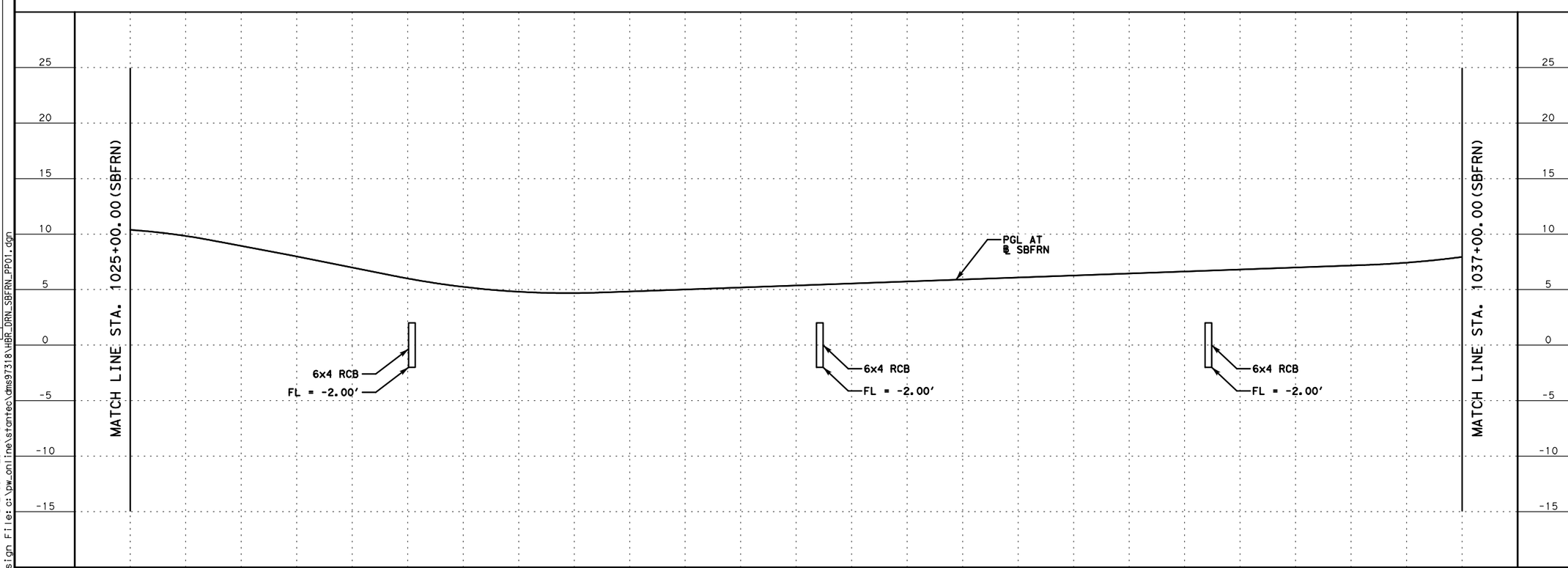

NO.	REVISIONS	BY	DATE

PRELIMINARY
FOR REVIEW ONLY
THESE DOCUMENTS ARE PRELIMINARY AND SUBJECT TO CHANGE. THEY ARE NOT INTENDED FOR CONSTRUCTION OR BIDDING. THEY WERE PREPARED BY, OR UNDER THE SUPERVISION OF:
Engineer: JACEK KWASNIEWSKI
P.E. No.: 95757
Date: 6/9/2017

RELEASE FOR CONSTRUCTION

US 181 HARBOR BRIDGE

DRAINAGE PLAN & PROFILE (SBFRN) SOUTH BOUND FRONTAGE ROAD

STA. 1025+00.0-STA. 1037+00.0
SCALE: 1"=100' H
1"=10' V

FLATIRON/DRAGADOS LLC

Stantec
Engineered by Stantec Consulting Services Inc.
Texas Registered Engineering Firm F-6324

Texas Department of Transportation
© 2017
SHEET 1 OF 5

FED. RD. DIV. NO.	FEDERAL AID PROJECT NO.		SHEET NO.
6	HP X597(1)		DRN 032
STATE	STATE DIST. NO.	COUNTY	
TEXAS	CRP	NUECES	
CONT.	SECT	JOB	HIGHWAY NO.
0101	06	095	US181

PROJECT
US 181 HARBOR BRIDGE

Checked by: Date:
Back-Checked by: Date:
Corrected by: Date:
Verified by: Date:

☐ TxDOT
☐ Detail Check ☐ Internal Review ☐ Design Review
☐ Drawing ☐ Report ☐ Other:
Prepared By: Date:
☐ Drawing Checked Against Calculations ☐ Calculations Check Confirmed
REVIEW PHASE

Plotted: 6/9/2017 2:03:17 PM
Pen Table: HBR_Pack1A_DRN.tbl
Design File: c:\pw_online\stantec\dms97318\HBR_DRN_SBFRN_PP01.dgn

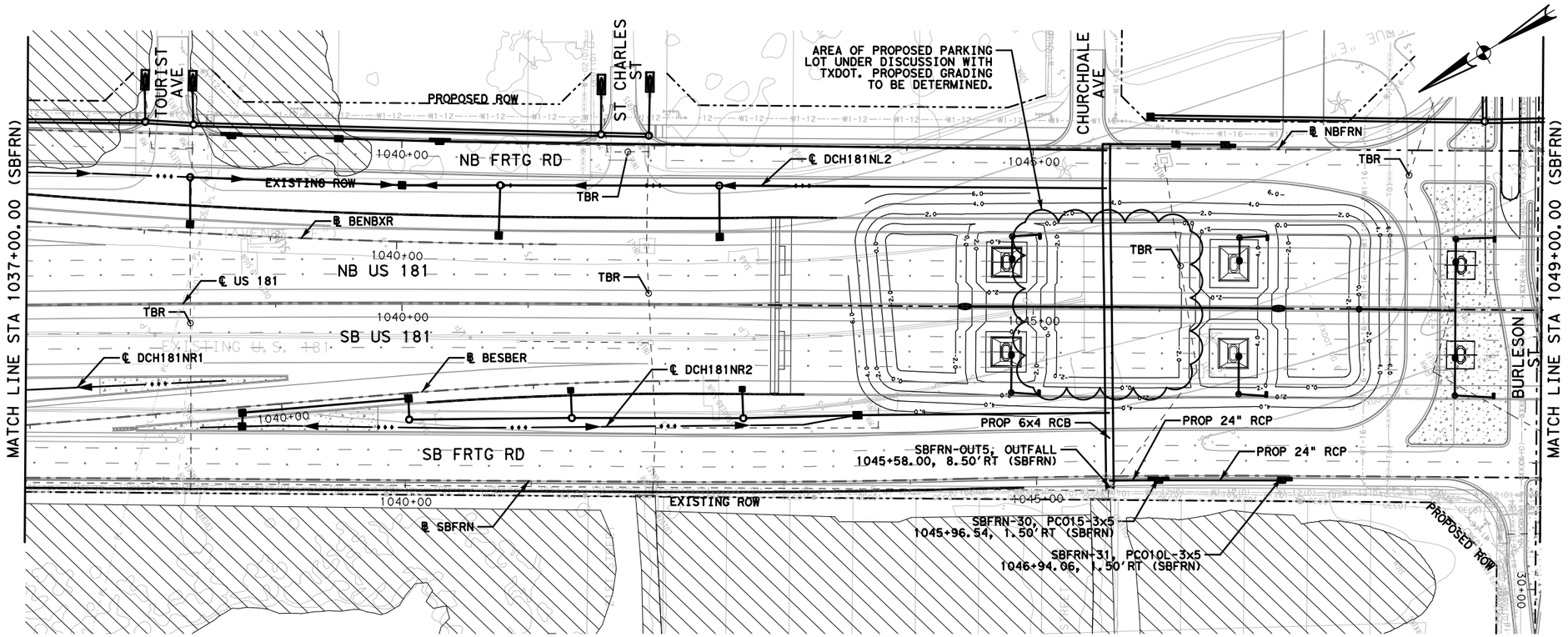

LEGEND

- 1.5" PFC
- RIPRAP
- DITCH
- PROPOSED MSE WALL
- EXISTING WETLANDS
- EXISTING STORM SEWER
- TBR — TO BE REMOVED
- INT — INTERCEPT EXISTING PIPE

NOTES:
1. DESIGN HGL WAS CALCULATED USING THE RINCON CHANNEL AVERAGE TIDEWATER ELEVATION OF +1.0' AS TAILWATER.
2. THE 10-YR TAILWATER (COSTAL FLOODING ELEVATION) IS +5.10'.

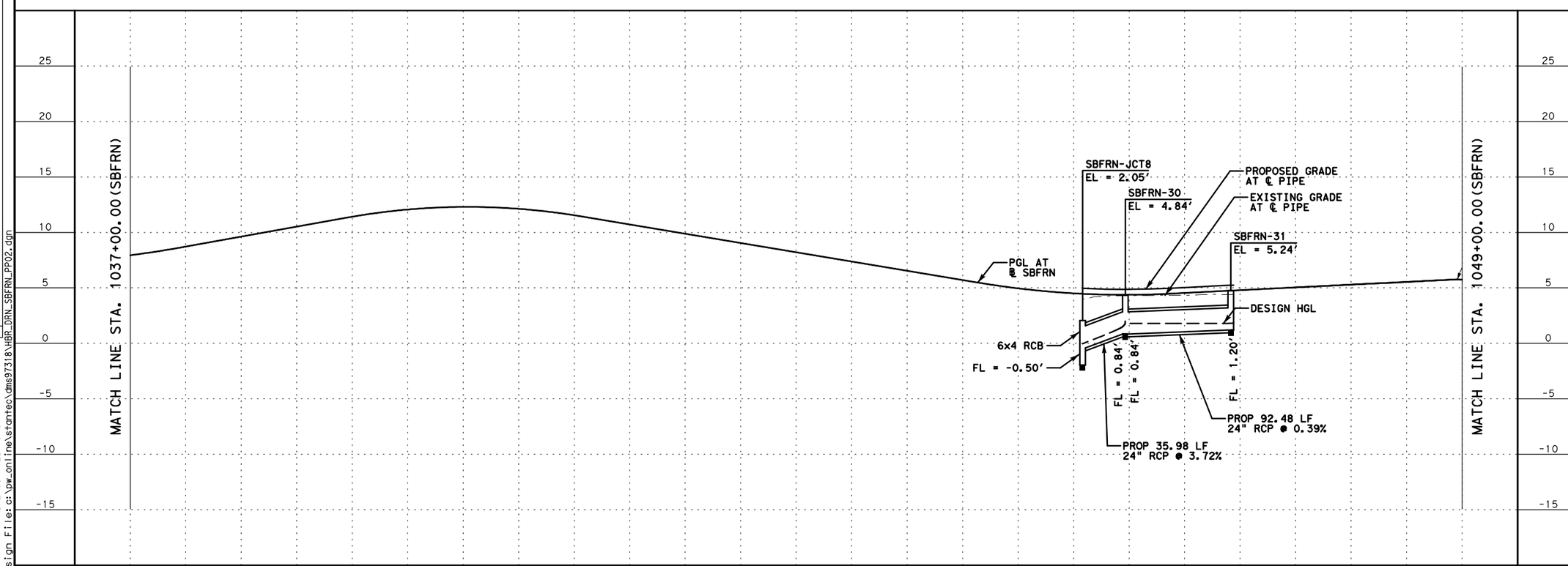

NO.	REVISIONS	BY	DATE

PRELIMINARY
FOR REVIEW ONLY
THESE DOCUMENTS ARE PRELIMINARY AND SUBJECT TO CHANGE. THEY ARE NOT INTENDED FOR CONSTRUCTION OR BIDDING. THEY WERE PREPARED BY, OR UNDER THE SUPERVISION OF:
Engineer: JACEK KWASNIEWSKI
P.E. No.: 95757
Date: 6/9/2017

RELEASE FOR CONSTRUCTION

US 181 HARBOR BRIDGE

DRAINAGE PLAN & PROFILE (SBFRN) SOUTH BOUND FRONTAGE ROAD

STA. 1037+00.0-STA. 1049+00.0
SCALE: 1"=100' H
1"=10' V

FLATIRON/DRAGADOS LLC

Stantec
Engineered by Stantec Consulting Services Inc.
Texas Registered Engineering Firm F-6324

Texas Department of Transportation
© 2017
SHEET 2 OF 5

FED. RD. DIV. NO.	FEDERAL AID PROJECT NO.		SHEET NO.
6	HP X597(1)		DRN 033
STATE	STATE DIST. NO.	COUNTY	
TEXAS	CRP	NUECES	
CONT.	SECT	JOB	HIGHWAY NO.
0101	06	095	US181

PROJECT
US 181 HARBOR BRIDGE

Checked by: Date:
Back-Checked by: Date:
Corrected by: Date:
Verified by: Date:

☐ Detail Check ☐ Internal Review ☐ Design Review ☐ TxDOT
☐ Drawing ☐ Report ☐ Other:
Prepared By: Date:
☐ Drawing Checked Against Calculations ☐ Calculations Check Confirmed
REVIEW PHASE

Plotted: 6/9/2017 2:03:31 PM
Pen Table: HBR_Packl A_DRN.tbl
Design File: c:\pw_online\stantec\dms97318\HBR_DRN_SBFRN_PP02.dgn

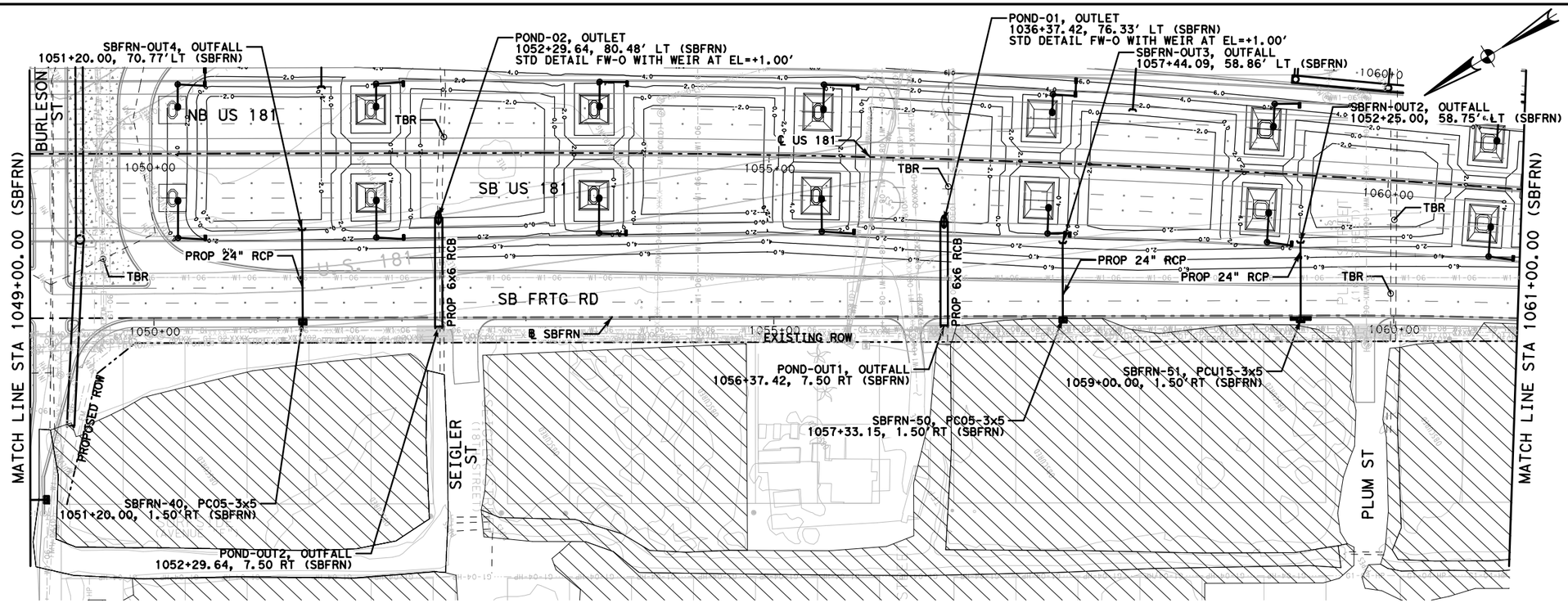

LEGEND

- 1.5" PFC
- RIPRAP
- DITCH
- PROPOSED MSE WALL
- EXISTING WETLANDS
- EXISTING STORM SEWER
- TBR — TO BE REMOVED
- INT — INTERCEPT EXISTING PIPE

NOTES:
1. DESIGN HGL WAS CALCULATED USING THE RINCON CHANNEL AVERAGE TIDEWATER ELEVATION OF +1.0' AS TAILWATER.
2. THE 10-YR TAILWATER (COSTAL FLOODING ELEVATION) IS +5.10'.

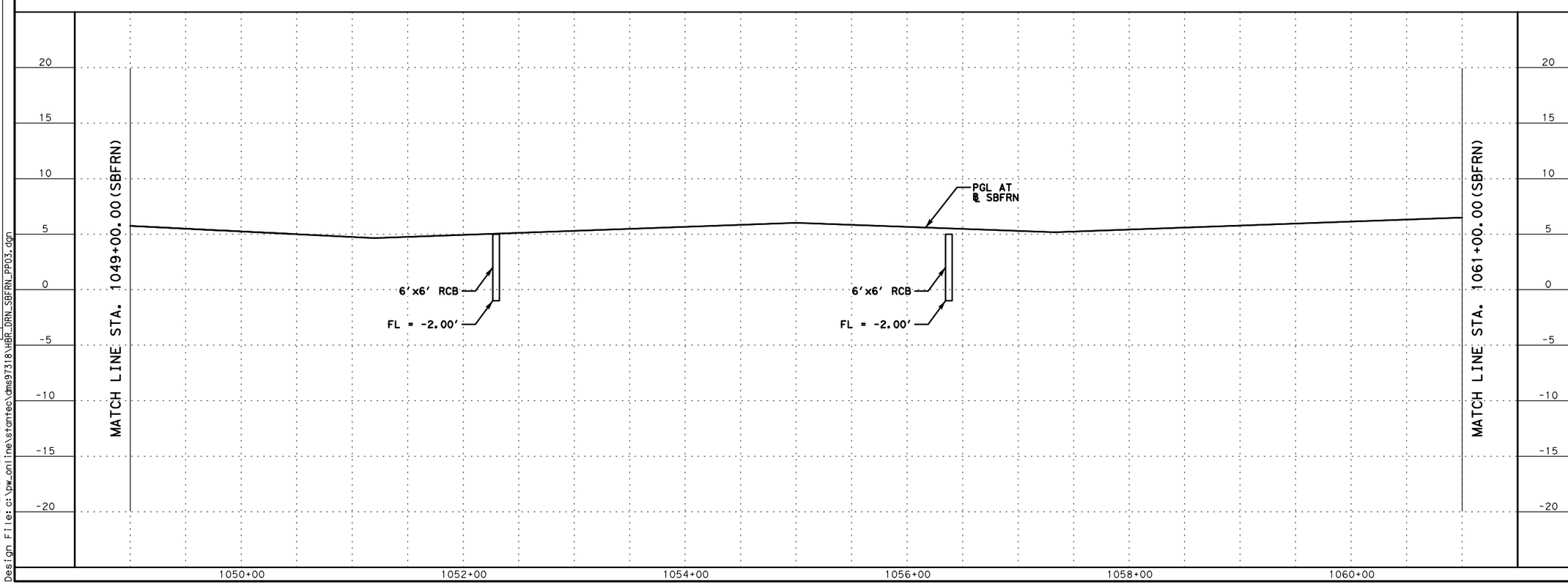

NO.	REVISIONS	BY	DATE

PRELIMINARY
FOR REVIEW ONLY
THESE DOCUMENTS ARE PRELIMINARY AND SUBJECT TO CHANGE. THEY ARE NOT INTENDED FOR CONSTRUCTION OR BIDDING. THEY WERE PREPARED BY, OR UNDER THE SUPERVISION OF:
Engineer: JACEK KWASNIEWSKI
P.E. No.: 95757
Date: 6/9/2017

RELEASE FOR CONSTRUCTION

US 181 HARBOR BRIDGE

DRAINAGE PLAN & PROFILE (SBFRN) SOUTH BOUND FRONTAGE ROAD

STA. 1049+00.0-STA. 1061+00.0
SCALE: 1"=100' H
1"=10' V

FLATIRON/DRAGADOS LLC

Stantec
Engineered by Stantec Consulting Services Inc.
Texas Registered Engineering Firm F-6324

Texas Department of Transportation
© 2017
SHEET 3 OF 5

FED. RD. DIV. NO.	FEDERAL AID PROJECT NO.		SHEET NO.
6	HP X597(1)		DRN 034
STATE	STATE DIST. NO.	COUNTY	
TEXAS	CRP	NUECES	
CONT.	SECT	JOB	HIGHWAY NO.
0101	06	095	US181

PROJECT: US 181 HARBOR BRIDGE

Checked by: Date:
Back-Checked by: Date:
Corrected by: Date:
Verified by: Date:

☐ Detail Check ☐ Internal Review ☐ Design Review ☐ TxDOT
☐ Drawing ☐ Report ☐ Other:
Prepared By: Date:
☐ Drawing Checked Against Calculations ☐ Calculations Check Confirmed

REVIEW PHASE

Plotted: 6/9/2017 2:03:43 PM
Pen Table: HBR_Pack1A_DRN.tbl
Design File: c:\pw_online\stantec\ms97318\HBR_DRN_SBFRN_PP03.dgn

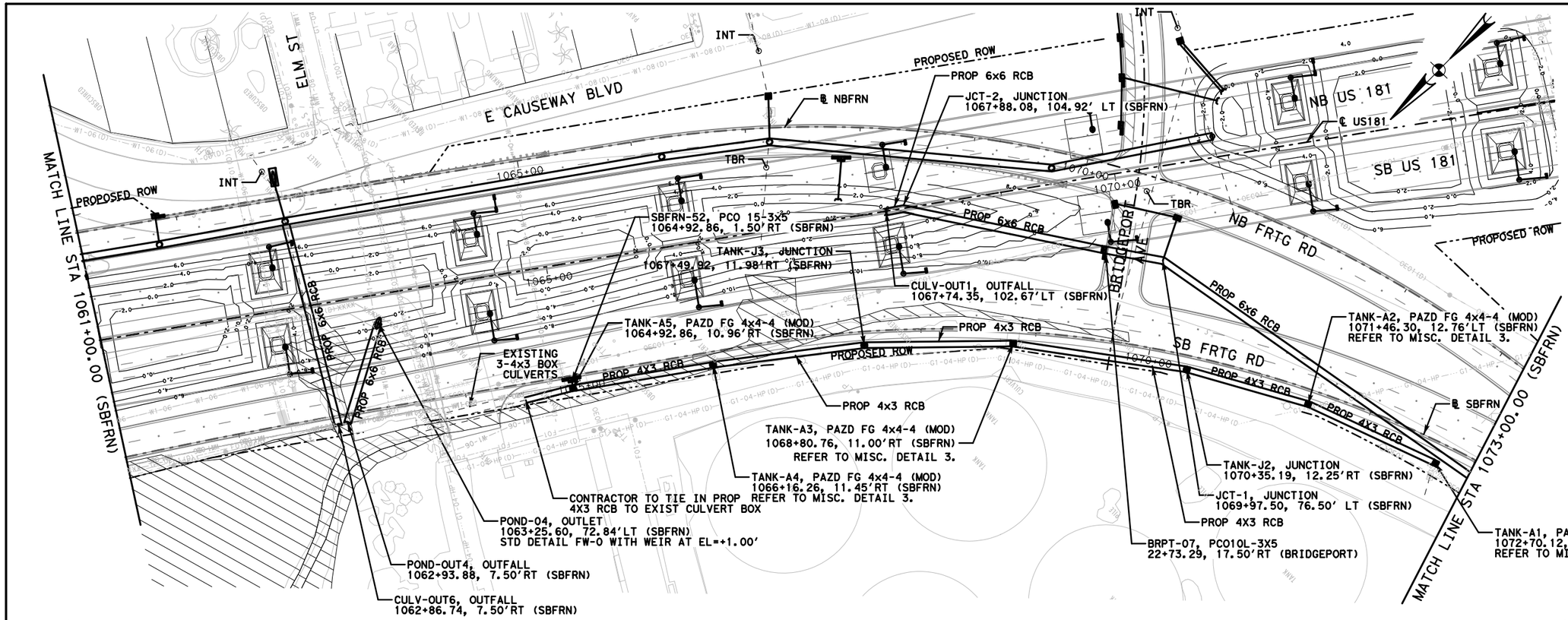

LEGEND

- 1.5" PFC
- RIPRAP
- DITCH
- PROPOSED MSE WALL
- EXISTING WETLANDS
- EXISTING STORM SEWER
- TBR — TO BE REMOVED
- INT — INTERCEPT EXISTING PIPE

NOTES:
1. DESIGN HGL WAS CALCULATED USING THE RINCON CHANNEL AVERAGE TIDEWATER ELEVATION OF +1.0' AS TAILWATER.
2. THE 10-YR TAILWATER (COSTAL FLOODING ELEVATION) IS +5.10'.

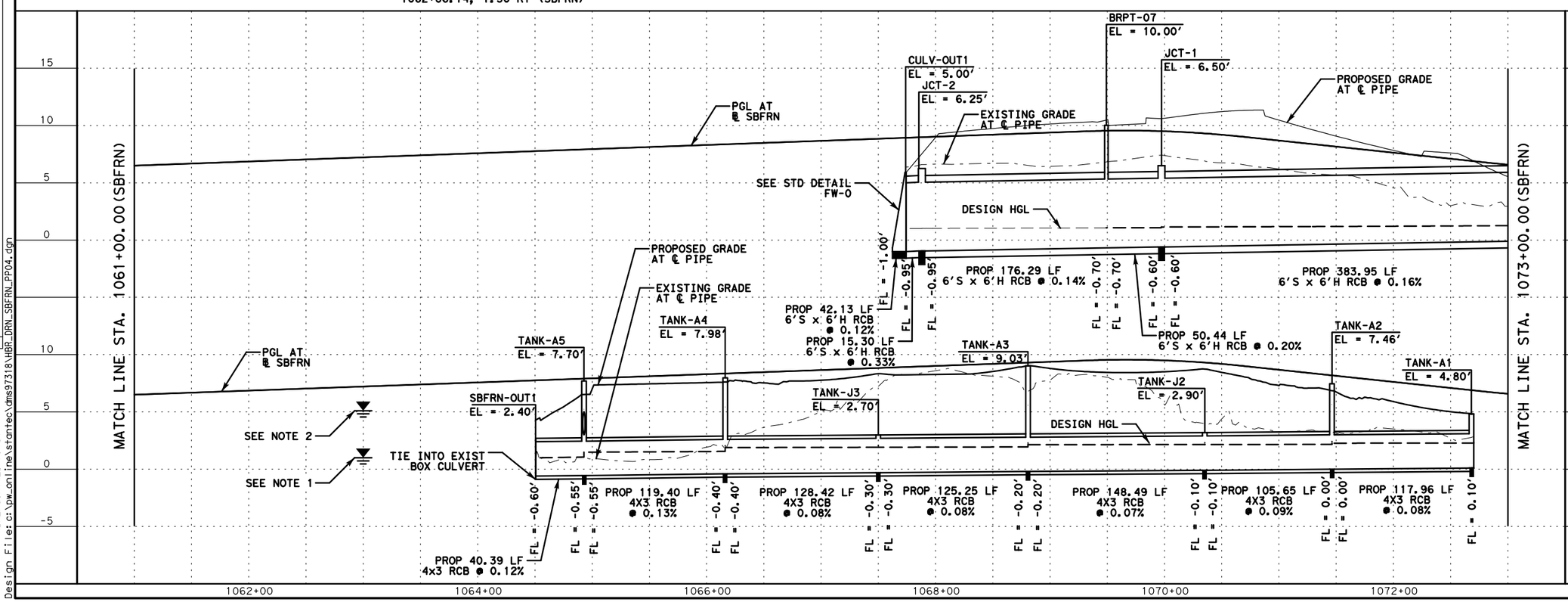

NO.	REVISIONS	BY	DATE

PRELIMINARY
FOR REVIEW ONLY
THESE DOCUMENTS ARE PRELIMINARY AND SUBJECT TO CHANGE. THEY ARE NOT INTENDED FOR CONSTRUCTION OR BIDDING. THEY WERE PREPARED BY, OR UNDER THE SUPERVISION OF:
Engineer: JACEK KWASNIEWSKI
P.E. No.: 95757
Date: 6/9/2017

RELEASE FOR CONSTRUCTION

US 181 HARBOR BRIDGE

DRAINAGE PLAN & PROFILE (SBFRN) SOUTH BOUND FRONTAGE ROAD

STA. 1061+00.0-STA. 1073+00.0
SCALE: 1"=100' H
1"=10' V

FLATIRON/DRAGADOS LLC

Stantec
Engineered by Stantec Consulting Services Inc.
Texas Registered Engineering Firm F-6324

Texas Department of Transportation
© 2017
SHEET 4 OF 5

FED. RD. DIV. NO.	FEDERAL AID PROJECT NO.		SHEET NO.
6	HP X597(1)		DRN 035
STATE	STATE DIST. NO.	COUNTY	
TEXAS	CRP	NUECES	
CONT.	SECT	JOB	HIGHWAY NO.
0101	06	095	US181

PROJECT
US 181 HARBOR BRIDGE

Checked by:	Date:		
Back-Checked by:	Date:		
Corrected by:	Date:		
Verified by:	Date:		

☐ TxDOT
☐ Detail Check ☐ Internal Review ☐ Design Review
☐ Drawing ☐ Report ☐ Other:
Prepared By: Date:
☐ Drawing Checked Against Calculations ☐ Calculations Check Confirmed
REVIEW PHASE

Plotted: 6/9/2017 2:03:54 PM
Pen Table: HBR_Pack1A_DRN.tbl
Design File: c:\pw_online\stantec\dms97318\HBR_DRN_SBFRN_PP04.dgn

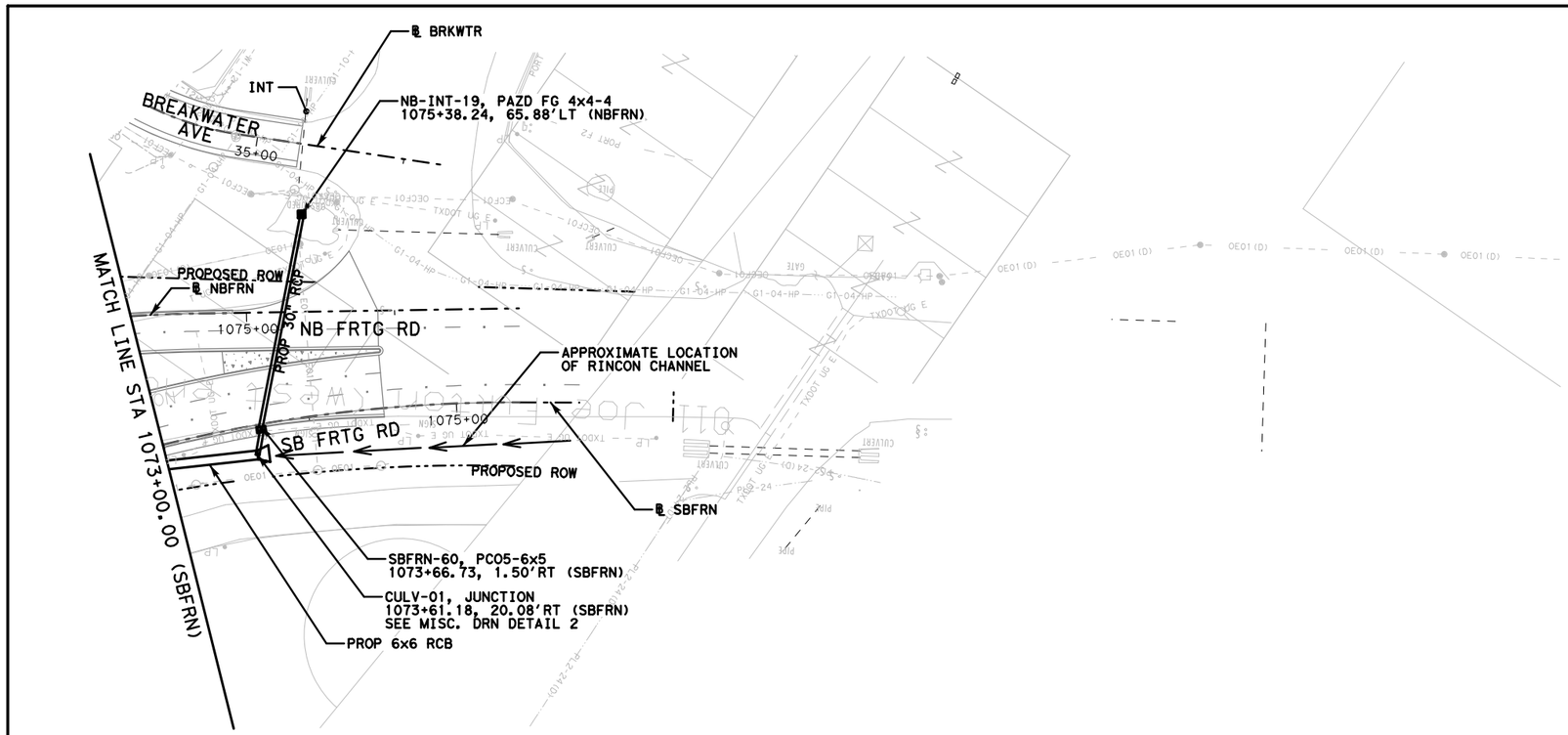

LEGEND

- 1.5" PFC
- RIPRAP
- DITCH
- PROPOSED MSE WALL
- EXISTING WETLANDS
- EXISTING STORM SEWER
- TBR — TO BE REMOVED
- INT — INTERCEPT EXISTING PIPE

NOTES:
1. DESIGN HGL WAS CALCULATED USING THE RINCON CHANNEL AVERAGE TIDEWATER ELEVATION OF +1.0' AS TAILWATER.
2. THE 10-YR TAILWATER (COSTAL FLOODING ELEVATION) IS +5.10'.

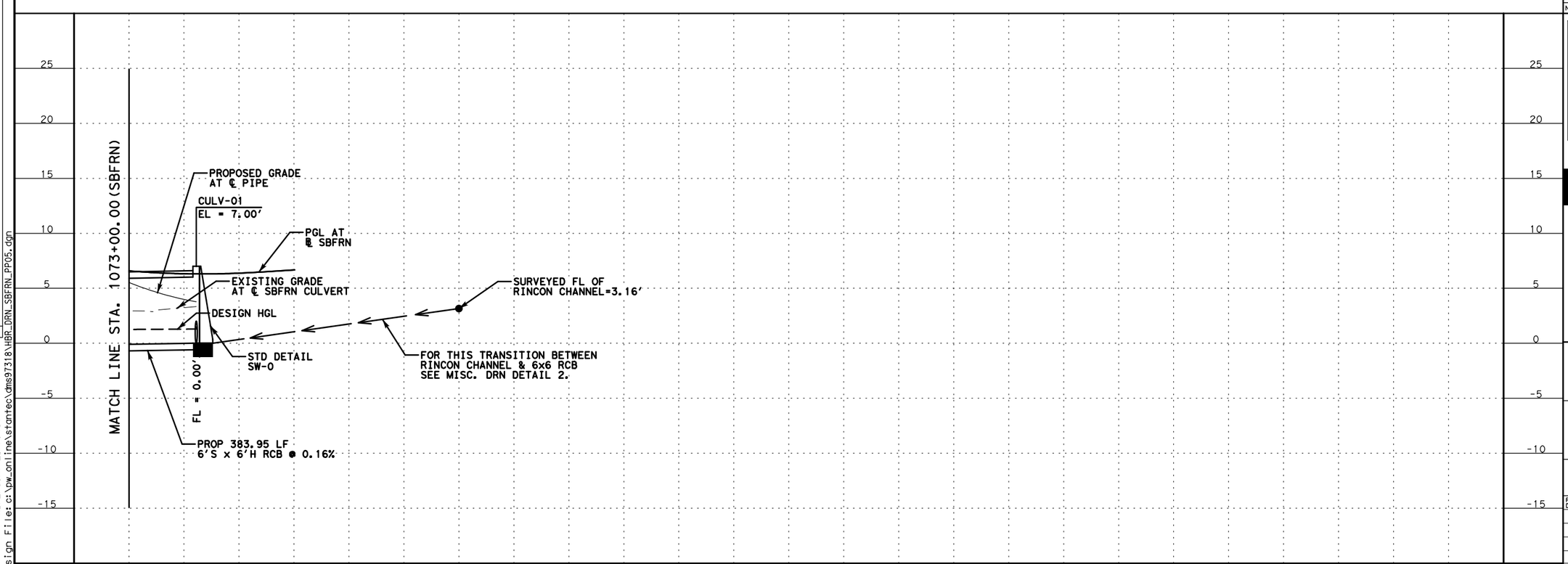

NO.	REVISIONS	BY	DATE

PRELIMINARY
FOR REVIEW ONLY
THESE DOCUMENTS ARE PRELIMINARY AND SUBJECT TO CHANGE. THEY ARE NOT INTENDED FOR CONSTRUCTION OR BIDDING. THEY WERE PREPARED BY, OR UNDER THE SUPERVISION OF:
Engineer: JACEK KWASNIEWSKI
P.E. No.: 95757
Date: 6/9/2017

RELEASE FOR CONSTRUCTION

US 181 HARBOR BRIDGE

DRAINAGE PLAN & PROFILE (SBFRN) SOUTH BOUND FRONTAGE ROAD

STA. 1073+00-STA. 1077+22.05
SCALE: 1"=100'H
1"=10' V

FLATIRON/DRAGADOS LLC

Stantec
Engineered by Stantec Consulting Services Inc.
Texas Registered Engineering Firm F-6324

Texas Department of Transportation
© 2017
SHEET 5 OF 5

FED. RD. DIV. NO.	FEDERAL AID PROJECT NO.		SHEET NO.
6	HP X597(1)		DRN 036
STATE	STATE DIST. NO.	COUNTY	
TEXAS	CRP	NUECES	
CONT.	SECT	JOB	HIGHWAY NO.
0101	06	095	US181

PROJECT
US 181 HARBOR BRIDGE

Checked by: Date:
Back-Checked by: Date:
Corrected by: Date:
Verified by: Date:

☐ TxDOT
☐ Detail Check ☐ Internal Review ☐ Design Review
☐ Drawing ☐ Report ☐ Other:
Prepared By: Date:
☐ Drawing Checked Against Calculations ☐ Calculations Check Confirmed

REVIEW PHASE

Plotted: 6/9/2017 2:04:05 PM
Pen Table: HBR_Pack1A_DRN.tbl
Design File: c:\pw_online\stantec\dms97318\HBR_DRN_SBFRN_PP05.dgn

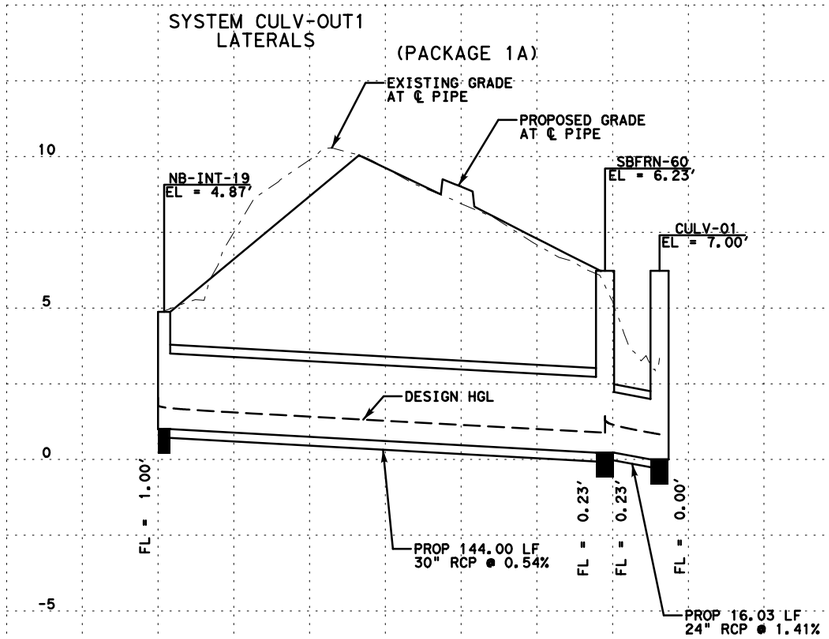

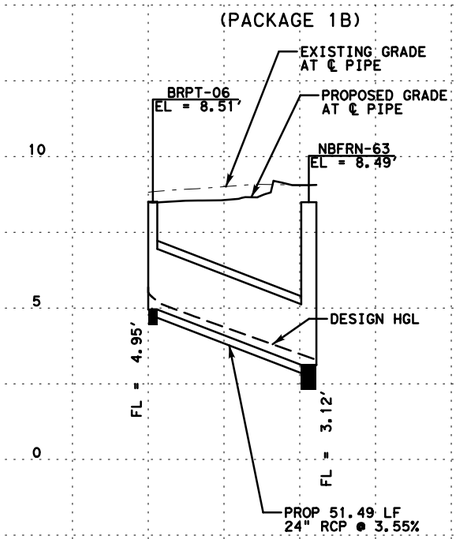

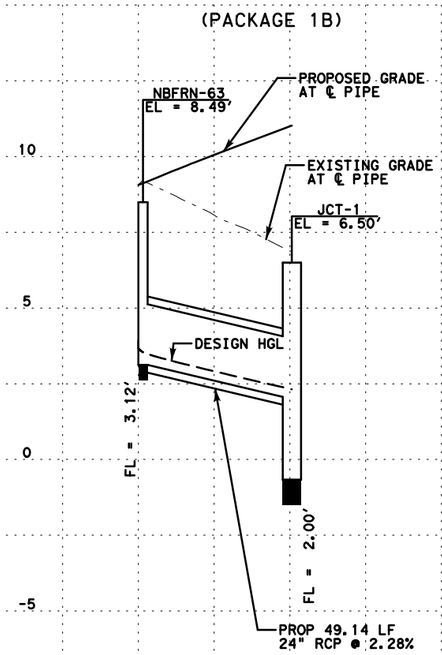

NOTES:
1. DESIGN HGL WAS CALCULATED USING THE RINCON CHANNEL AVERAGE TIDEWATER ELEVATION OF +1.0' AS TAILWATER.
2. THE 10-YR TAILWATER (COSTAL FLOODING ELEVATION) IS +5.10'.
3. REFER TO CORRESPONDING SUBMITTAL PACKAGE FOR PLAN SHEETS.

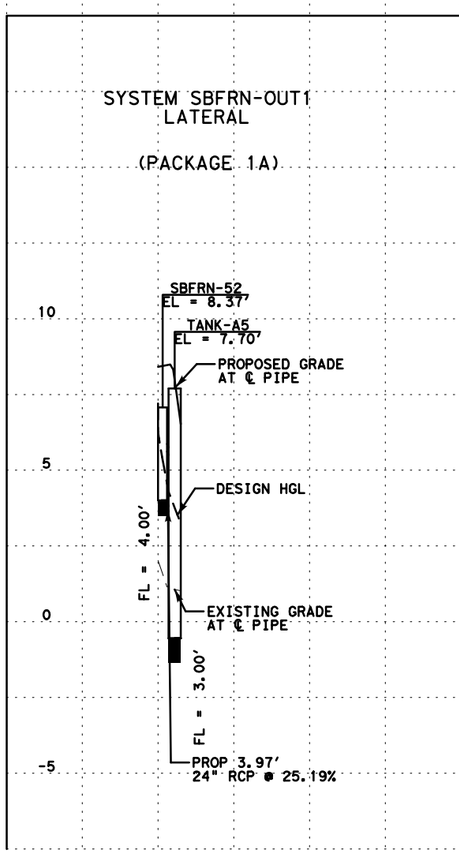

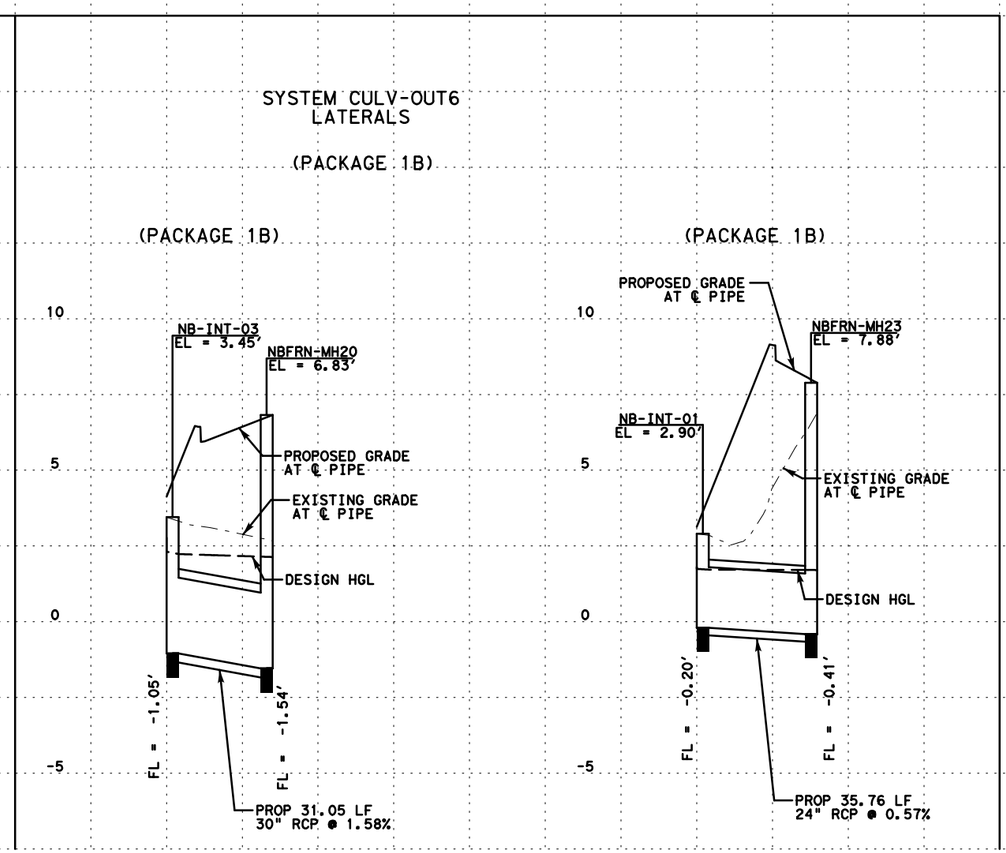

PROJECT
US 181 HARBOR BRIDGE

Checked by: Date:
Back-Checked by: Date:
Corrected by: Date:
Verified by: Date:

☐ Detail Check ☐ Internal Review ☐ Design Review ☐ TxDOT
☐ Drawing ☐ Report ☐ Other:
Prepared By: Date:
☐ Drawing Checked Against Calculations ☐ Calculations Check Confirmed
REVIEW PHASE

Plotted: 6/9/2017 2:04:12 PM
Pen Table: HBR_Pack1A_DRN.tbl
Design File: c:\pw_online\stantec\ams97318\HBR_DRN_LATERALS_LT01.dgn

NO.	REVISIONS	BY	DATE

PRELIMINARY
FOR REVIEW ONLY
THESE DOCUMENTS ARE PRELIMINARY AND SUBJECT TO CHANGE. THEY ARE NOT INTENDED FOR CONSTRUCTION OR BIDDING. THEY WERE PREPARED BY, OR UNDER THE SUPERVISION OF:
Engineer: JACEK KWASNIEWSKI
P.E. No.: 95757
Date: 6/9/2017

RELEASE FOR CONSTRUCTION

US 181 HARBOR BRIDGE

DRAINAGE PROFILES & LATERALS

SCALE: 1"=50' H
1"=10' V

FLATIRON/DRAGADOS LLC

Stantec
Engineered by Stantec Consulting Services Inc.
Texas Registered Engineering Firm F-6324

Texas Department of Transportation
© 2017
SHEET 1 OF 9

FED. RD. DIV. NO.	FEDERAL AID PROJECT NO.		SHEET NO.
6	HP X597(1)		DRN 037
STATE	STATE DIST. NO.	COUNTY	
TEXAS	CRP	NUECES	
CONT.	SECT	JOB	HIGHWAY NO.
0101	06	095	US181

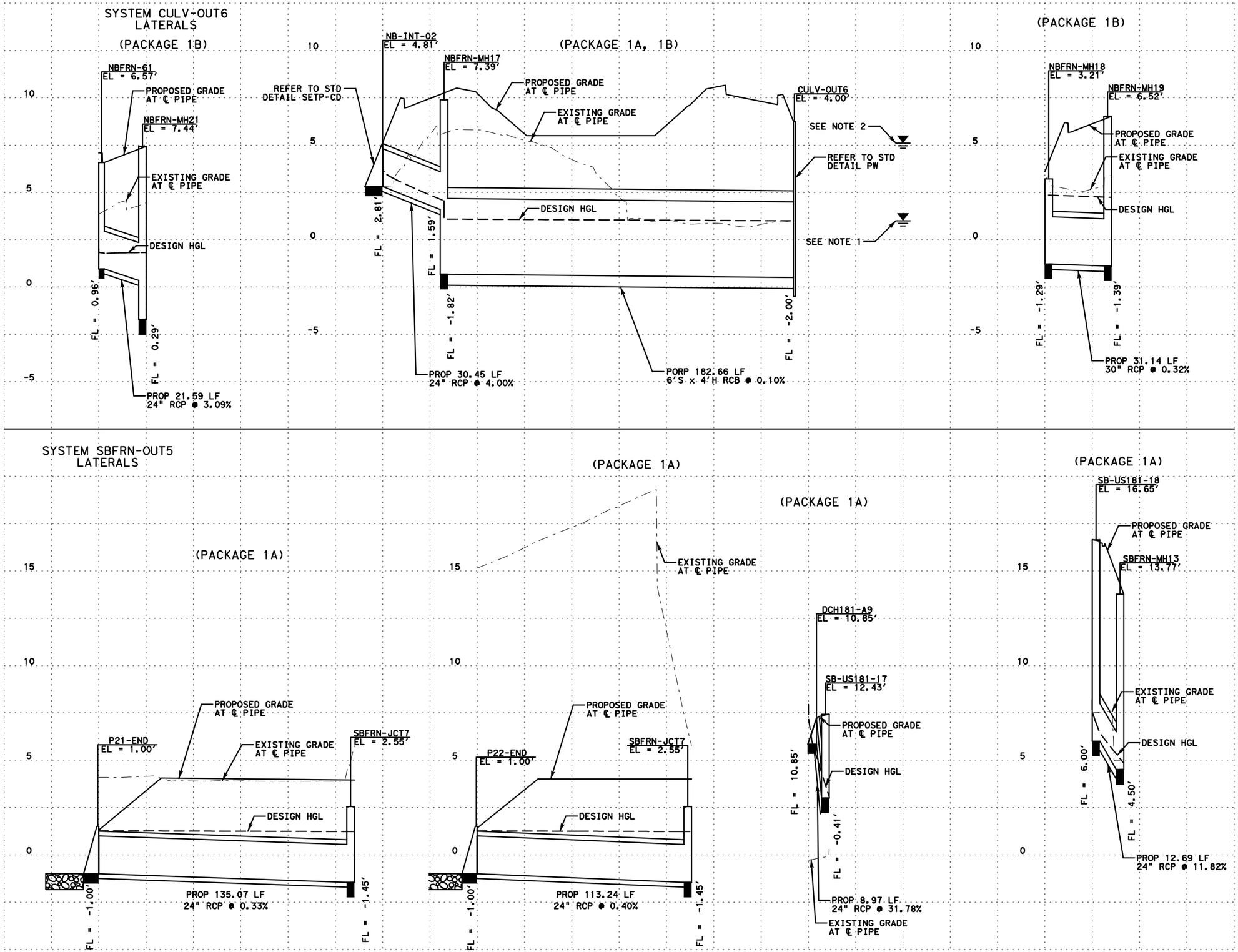

NOTES:
1. DESIGN HGL WAS CALCULATED USING THE RINCON CHANNEL AVERAGE TIDEWATER ELEVATION OF +1.0' AS TAILWATER.
2. THE 10-YR TAILWATER (COSTAL FLOODING ELEVATION) IS +5.10'.
3. REFER TO CORRESPONDING SUBMITTAL PACKAGE FOR PLAN SHEETS.

NO.	REVISIONS	BY	DATE

PRELIMINARY
FOR REVIEW ONLY
THESE DOCUMENTS ARE PRELIMINARY AND SUBJECT TO CHANGE. THEY ARE NOT INTENDED FOR CONSTRUCTION OR BIDDING. THEY WERE PREPARED BY, OR UNDER THE SUPERVISION OF:
Engineer: JACEK KWASNIEWSKI
P.E. No.: 95757
Date: 6/9/2017

RELEASE FOR CONSTRUCTION

US 181 HARBOR BRIDGE

DRAINAGE PROFILES & LATERALS

SCALE: 1"=50' H
1"=10' V

FLATIRON/DRAGADOS LLC

Stantec
Engineered by Stantec Consulting Services Inc.
Texas Registered Engineering Firm F-6324

Texas Department of Transportation
© 2017

SHEET 2 OF 9

FED. RD. DIV. NO.	FEDERAL AID PROJECT NO.		SHEET NO.
6	HP X597(1)		DRN 038
STATE	STATE DIST. NO.	COUNTY	
TEXAS	CRP	NUECES	
CONT.	SECT	JOB	HIGHWAY NO.
0101	06	095	US181

PROJECT
US 181 HARBOR BRIDGE

Checked by: Date:
Back-Checked by: Date:
Corrected by: Date:
Verified by: Date:

☐ Detail Check ☐ Internal Review ☐ Design Review ☐ TxDOT
☐ Drawing ☐ Report ☐ Other:
Prepared By: Date:
☐ Drawing Checked Against Calculations ☐ Calculations Check Confirmed

REVIEW PHASE

Plotted: 6/9/2017 2:04:19 PM
Pen Table: HBR_Pack1A_DRN.tbl
Design File: c:\pw_online\stantec\ams97318\HBR_DRN_LATERALS_LT02.dgn

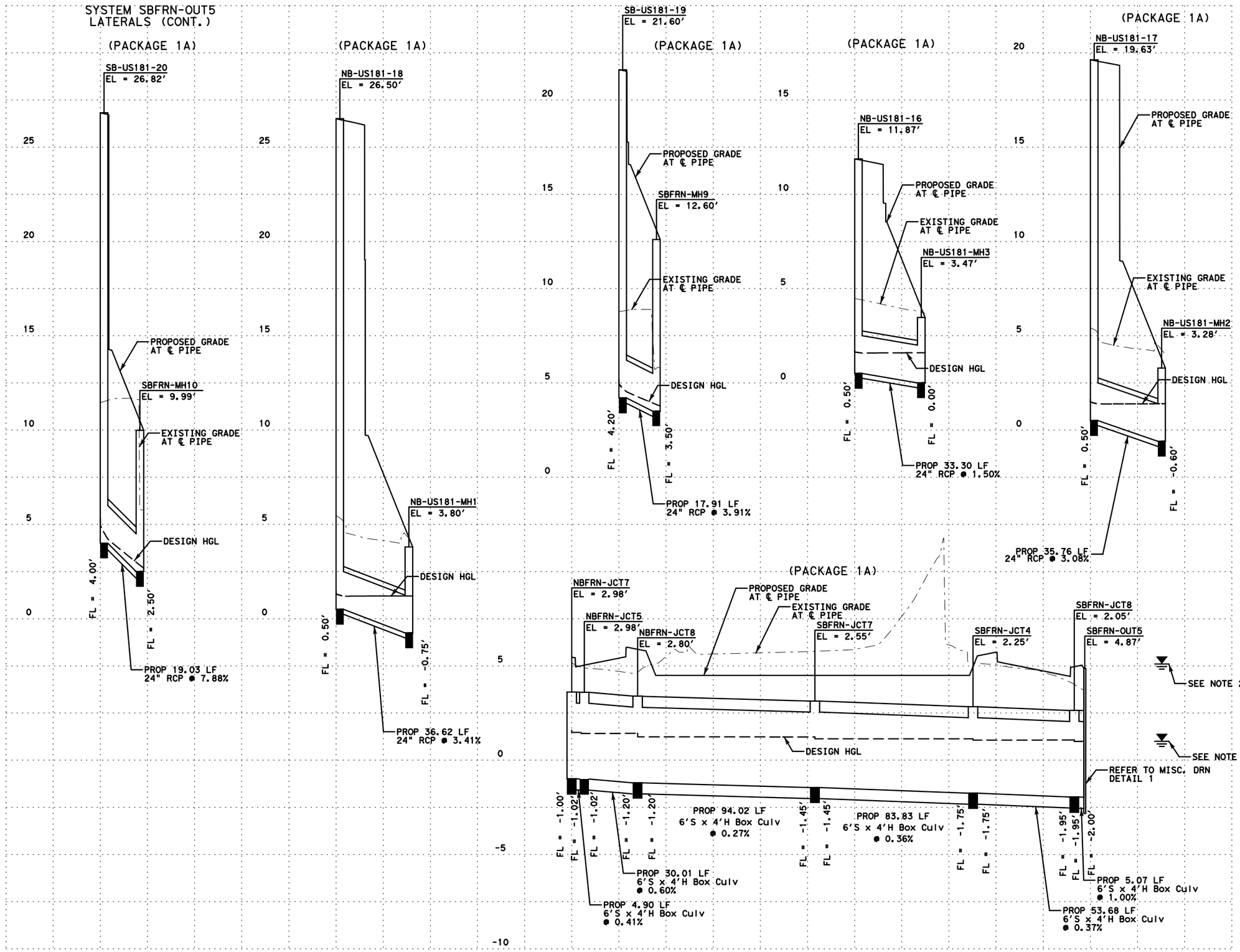

NOTES:
1. DESIGN HGL WAS CALCULATED USING THE RINCON CHANNEL AVERAGE TIDEWATER ELEVATION OF +1.0' AS TAILWATER.
2. THE 10-YR TAILWATER (COSTAL FLOODING ELEVATION) IS +5.10'.
3. REFER TO CORRESPONDING SUBMITTAL PACKAGE FOR PLAN SHEETS.

NO.	REVISIONS	BY	DATE

PRELIMINARY
FOR REVIEW ONLY
THESE DOCUMENTS ARE PRELIMINARY AND SUBJECT TO CHANGE. THEY ARE NOT INTENDED FOR CONSTRUCTION OR BIDDING. THEY WERE PREPARED BY, OR UNDER THE SUPERVISION OF:
Engineer: JACEK KWASNIEWSKI
P.E. No.: 95757
Date: 6/9/2017

RELEASE FOR CONSTRUCTION

US 181 HARBOR BRIDGE

DRAINAGE PROFILES & LATERALS

SCALE: 1"=50' H
1"=10' V

FLATIRON/DRAGADOS LLC

Stantec
Engineered by Stantec Consulting Services Inc.
Texas Registered Engineering Firm F-6324

Texas Department of Transportation
© 2017

SHEET 3 OF 9

FED. RD. DIV. NO.	FEDERAL AID PROJECT NO.		SHEET NO.
6	HP X597(1)		DRN 039
STATE	STATE DIST. NO.	COUNTY	
TEXAS	CRP	NUECES	
CONT.	SECT	JOB	HIGHWAY NO.
0101	06	095	US181

PROJECT: US 181 HARBOR BRIDGE

Checked by: Date:
Back-Checked by: Date:
Corrected by: Date:
Verified by: Date:

☐ TxDOT
☐ Detail Check ☐ Internal Review ☐ Design Review
☐ Drawing ☐ Report ☐ Other:
Prepared By: Date:
☐ Drawing Checked Against Calculations ☐ Calculations Check Confirmed

REVIEW PHASE

Plotted: 6/9/2017 2:04:26 PM
Pen Table: HBR_Pack1A_DRN.tbl
Design File: c:\pw_online\stantec\dms97318\HBR_DRN_LATERALS_LT03.dgn

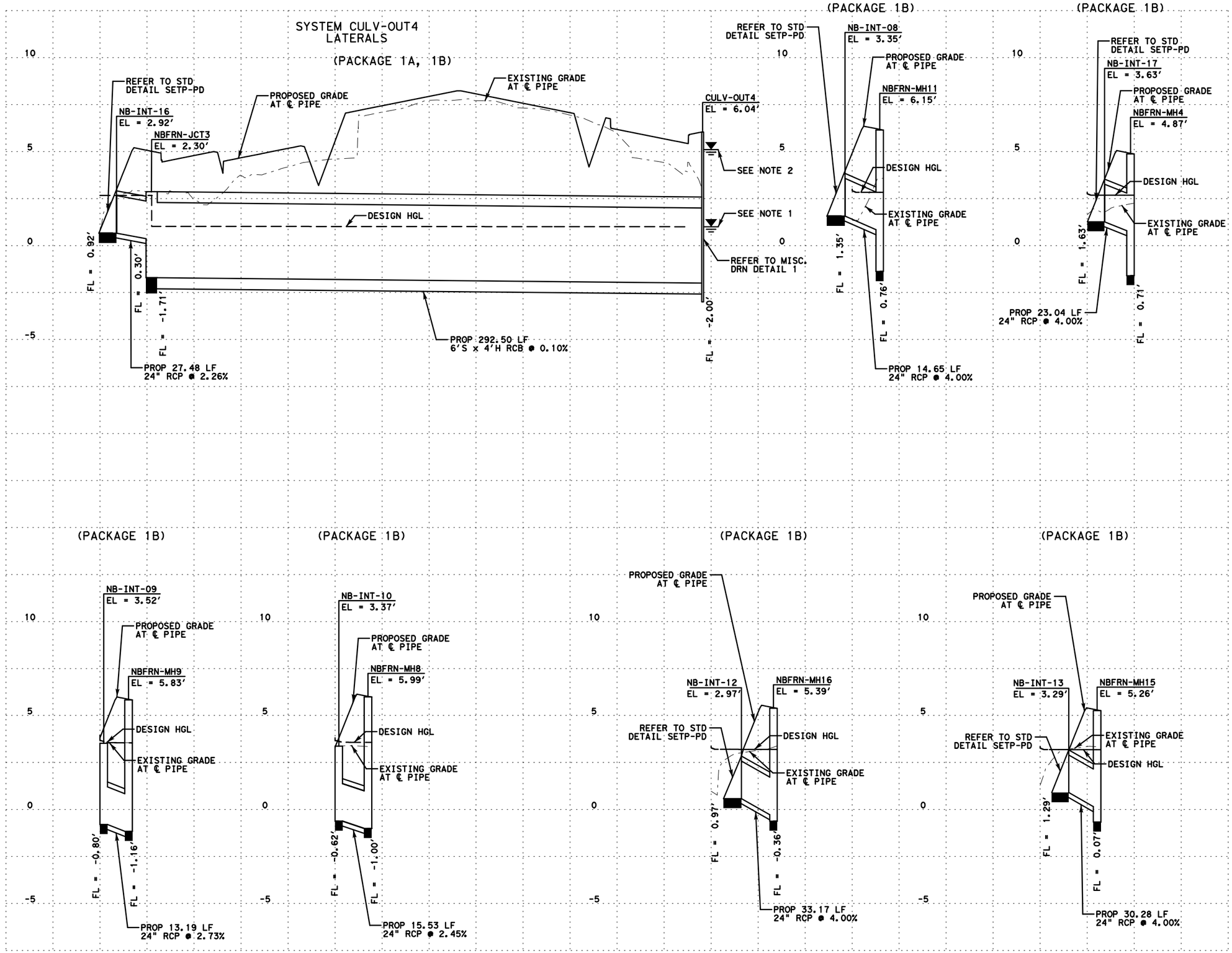

NOTES:
1. DESIGN HGL WAS CALCULATED USING THE RINCON CHANNEL AVERAGE TIDEWATER ELEVATION OF +1.0' AS TAILWATER.
2. THE 10-YR TAILWATER (COSTAL FLOODING ELEVATION) IS +5.10'.
3. REFER TO CORRESPONDING SUBMITTAL PACKAGE FOR PLAN SHEETS.

NO.	REVISIONS	BY	DATE

PRELIMINARY
FOR REVIEW ONLY
THESE DOCUMENTS ARE PRELIMINARY AND SUBJECT TO CHANGE. THEY ARE NOT INTENDED FOR CONSTRUCTION OR BIDDING. THEY WERE PREPARED BY, OR UNDER THE SUPERVISION OF:
Engineer: JACEK KWASNIEWSKI
P.E. No.: 95757
Date: 6/9/2017

RELEASE FOR CONSTRUCTION

US 181 HARBOR BRIDGE

DRAINAGE PROFILES & LATERALS

SCALE: 1"=50' H
1"=10' V

FLATIRON/DRAGADOS LLC

Stantec
Engineered by Stantec Consulting Services Inc.
Texas Registered Engineering Firm F-6324

Texas Department of Transportation
© 2017

SHEET 4 OF 9

FED. RD. DIV. NO.	FEDERAL AID PROJECT NO.		SHEET NO.
6	HP X597(1)		DRN 040
STATE	STATE DIST. NO.	COUNTY	
TEXAS	CRP	NUECES	
CONT.	SECT	JOB	HIGHWAY NO.
0101	06	095	US181

PROJECT
US 181 HARBOR BRIDGE

Checked by: Date:
Back-Checked by: Date:
Corrected by: Date:
Verified by: Date:

☐ Detail Check ☐ Internal Review ☐ Design Review ☐ TxDOT
☐ Drawing ☐ Report ☐ Other:
Prepared By: Date:
☐ Drawing Checked Against Calculations ☐ Calculations Check Confirmed
REVIEW PHASE

Plotted: 6/9/2017 2:04:34 PM
Pen Table: HBR_Pack1A_DRN.tbl
Design File: c:\pw_online\stantec\ams97318\HBR_DRN_LATERALS_LT04.dgn

SYSTEM CULV-OUT4 LATERALS (CONT.)

(PACKAGE 1B)

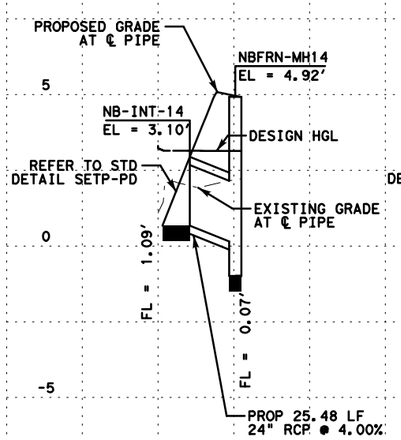

(PACKAGE 1B)

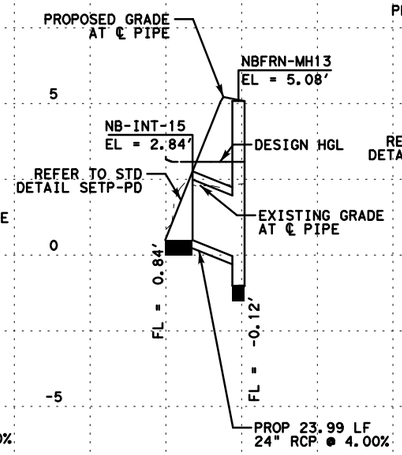

(PACKAGE 1B)

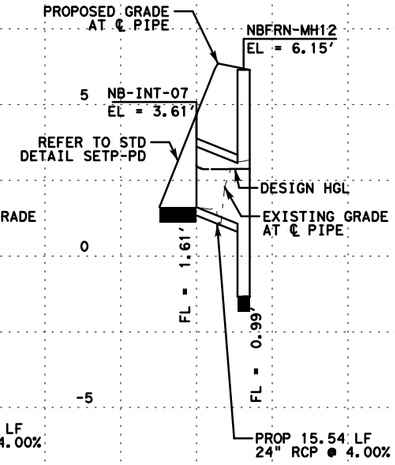

SYSTEM CULV-OUT3 LATERALS

(PACKAGE 1B)

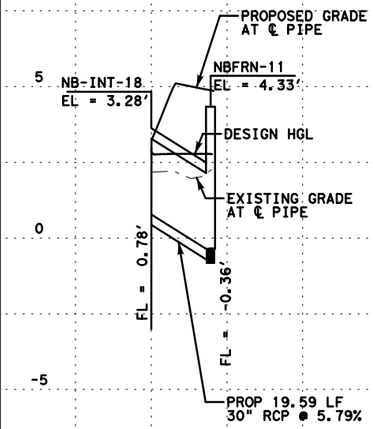

(PACKAGE 1A)

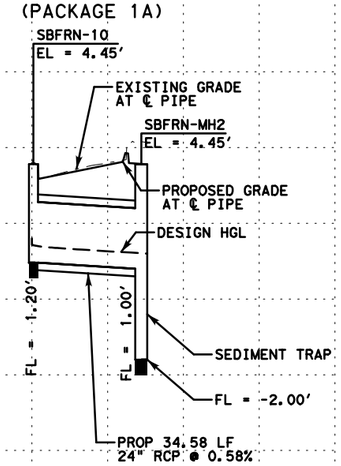

NOTES:
1. DESIGN HGL WAS CALCULATED USING THE RINCON CHANNEL AVERAGE TIDEWATER ELEVATION OF +1.0' AS TAILWATER.
2. THE 10-YR TAILWATER (COSTAL FLOODING ELEVATION) IS +5.10'.
3. REFER TO CORRESPONDING SUBMITTAL PACKAGE FOR PLAN SHEETS.

(PACKAGE 1A, 1B)

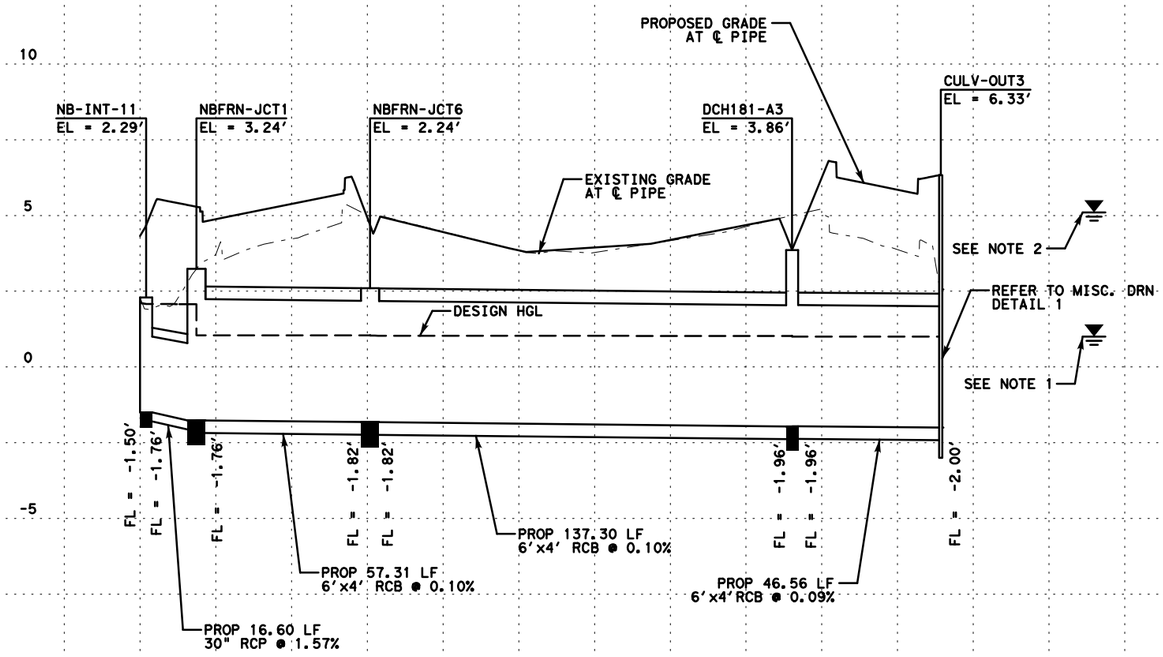

(PACKAGE 1B)

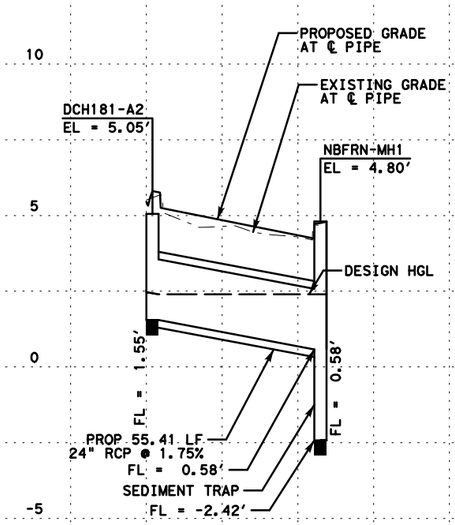

NO.	REVISIONS	BY	DATE

PRELIMINARY
FOR REVIEW ONLY
THESE DOCUMENTS ARE PRELIMINARY AND SUBJECT TO CHANGE. THEY ARE NOT INTENDED FOR CONSTRUCTION OR BIDDING. THEY WERE PREPARED BY, OR UNDER THE SUPERVISION OF:
Engineer: JACEK KWASNIEWSKI
P.E. No.: 95757
Date: 6/9/2017

RELEASE FOR CONSTRUCTION

US 181 HARBOR BRIDGE

DRAINAGE PROFILES & LATERALS

SCALE: 1"=50' H
1"=10' V

FLATIRON/DRAGADOS LLC

Stantec
Engineered by Stantec Consulting Services Inc.
Texas Registered Engineering Firm F-6324

Texas Department of Transportation
© 2017
SHEET 5 OF 9

FED. RD. DIV. NO.	FEDERAL AID PROJECT NO.		SHEET NO.
6	HP X597(1)		DRN 041
STATE	STATE DIST. NO.	COUNTY	
TEXAS	CRP	NUECES	
CONT.	SECT	JOB	HIGHWAY NO.
0101	06	095	US181

PROJECT: US 181 HARBOR BRIDGE

Checked by: Date:
Back-Checked by: Date:
Corrected by: Date:
Verified by: Date:

☐ Detail Check ☐ Internal Review ☐ Design Review ☐ TxDOT
☐ Drawing ☐ Report ☐ Other:
Prepared By: Date:
☐ Drawing Checked Against Calculations ☐ Calculations Check Confirmed
REVIEW PHASE

Plotted: 6/9/2017 2:04:41 PM
Pen Table: HBR_Pack1A_DRN.tbl
Design File: c:\pw_online\stantec\ams97318\HBR_DRN_LATERALS_LT05.dgn

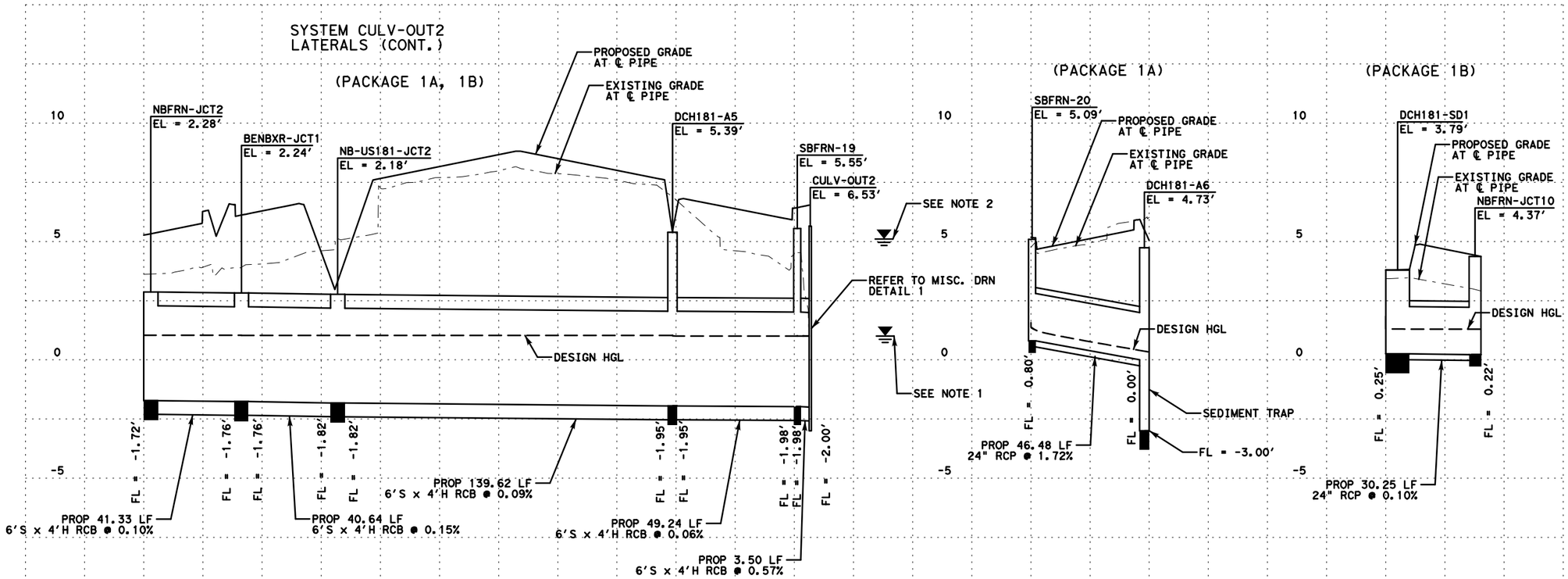

NOTES:
1. DESIGN HGL WAS CALCULATED USING THE RINCON CHANNEL AVERAGE TIDEWATER ELEVATION OF +1.0' AS TAILWATER.
2. THE 10-YR TAILWATER (COSTAL FLOODING ELEVATION) IS +5.10'.
3. REFER TO CORRESPONDING SUBMITTAL PACKAGE FOR PLAN SHEETS.

NO.	REVISIONS	BY	DATE

PRELIMINARY
FOR REVIEW ONLY
THESE DOCUMENTS ARE PRELIMINARY AND SUBJECT TO CHANGE. THEY ARE NOT INTENDED FOR CONSTRUCTION OR BIDDING. THEY WERE PREPARED BY, OR UNDER THE SUPERVISION OF:
Engineer: JACEK KWASNIEWSKI
P.E. No.: 95757
Date: 6/9/2017

RELEASE FOR CONSTRUCTION

US 181 HARBOR BRIDGE

DRAINAGE PROFILES & LATERALS

SCALE: 1"=50' H
1"=10' V

FLATIRON/DRAGADOS LLC

Stantec
Engineered by Stantec Consulting Services Inc.
Texas Registered Engineering Firm F-6324

Texas Department of Transportation
© 2017
SHEET 6 OF 9

FED. RD. DIV. NO.	FEDERAL AID PROJECT NO.		SHEET NO.
6	HP X597(1)		DRN 042
STATE	STATE DIST. NO.	COUNTY	
TEXAS	CRP	NUECES	
CONT.	SECT	JOB	HIGHWAY NO.
0101	06	095	US181

PROJECT
US 181 HARBOR BRIDGE

Checked by: Date:
Back-Checked by: Date:
Corrected by: Date:
Verified by: Date:

Calculations Check Confirmed
Drawing Checked Against Calculations
Prepared By: Date:

REVIEW PHASE
Detail Check
Drawing
Internal Review
Report
Design Review
Other:
TxDOT

Plotted: 6/9/2017 2:04:48 PM
Pen Table: HBR_Pack1A_DRN.tbl
Design File: c:\pw_online\stantec\dms97318\HBR_DRN_LATERALS_LT06.dgn

SYSTEM CULV-OUT5 LATERALS (CONT.)

(PACKAGE 1A)

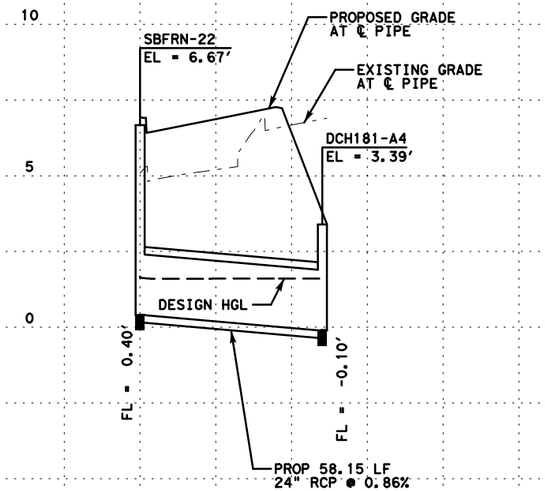

(PACKAGE 1A)

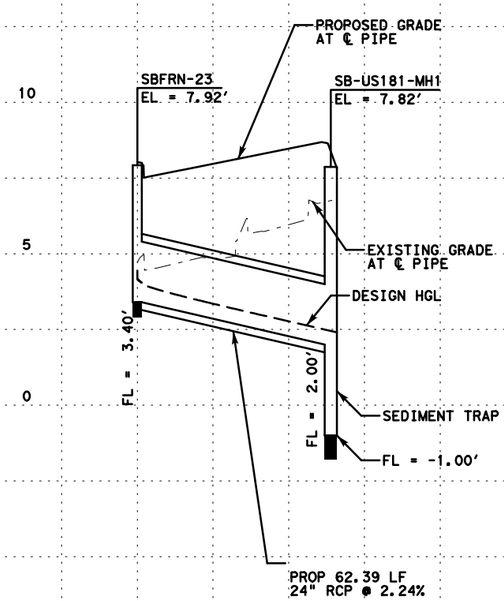

SYSTEM POND OUTLET LATERALS

(PACKAGE 1A)

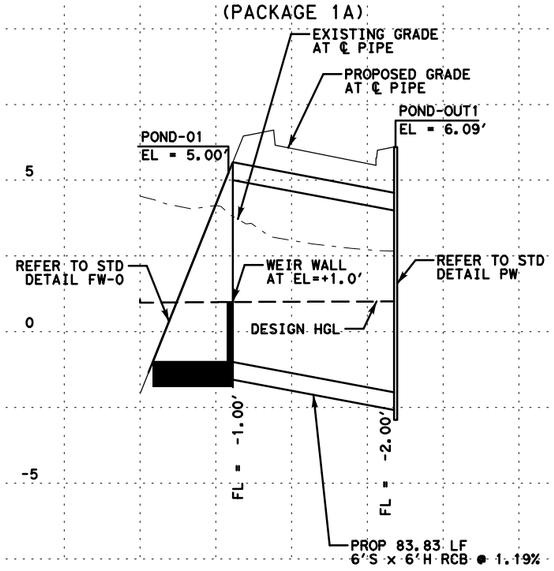

(PACKAGE 1A)

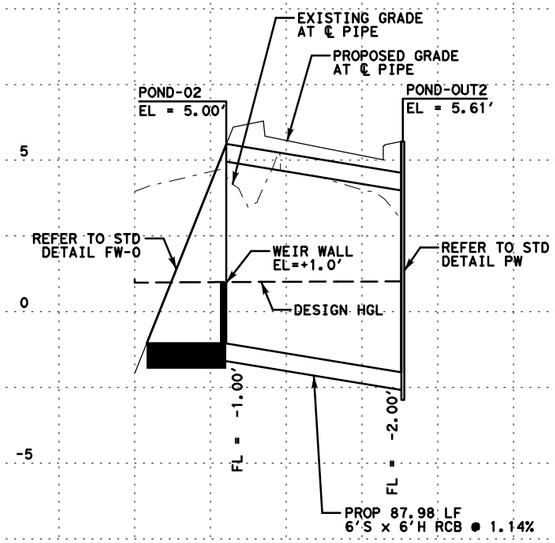

(PACKAGE 1A)

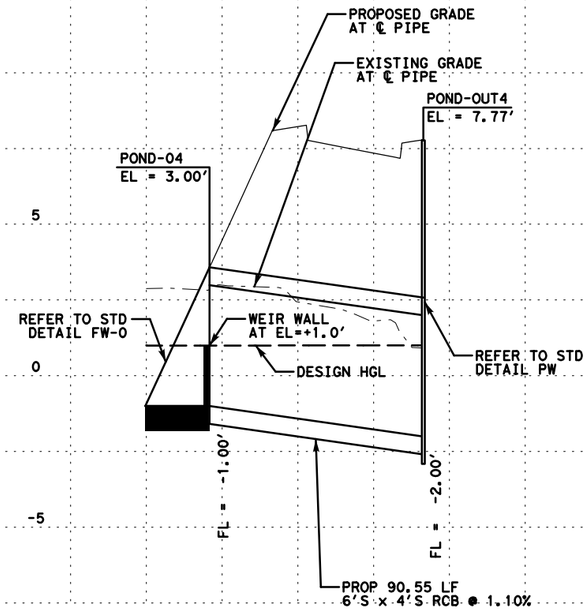

NOTES:
1. DESIGN HGL WAS CALCULATED USING THE RINCON CHANNEL AVERAGE TIDEWATER ELEVATION OF +1.0' AS TAILWATER.
2. THE 10-YR TAILWATER (COSTAL FLOODING ELEVATION) IS +5.10'.
3. REFER TO CORRESPONDING SUBMITTAL PACKAGE FOR PLAN SHEETS.

NO.	REVISIONS	BY	DATE

PRELIMINARY
FOR REVIEW ONLY
THESE DOCUMENTS ARE PRELIMINARY AND SUBJECT TO CHANGE. THEY ARE NOT INTENDED FOR CONSTRUCTION OR BIDDING. THEY WERE PREPARED BY, OR UNDER THE SUPERVISION OF:
Engineer: JACEK KWASNIEWSKI
P.E. No.: 95757
Date: 6/9/2017

RELEASE FOR CONSTRUCTION

US 181 HARBOR BRIDGE

DRAINAGE PROFILES & LATERALS

SCALE: 1"=50' H
1"=10' V

FLATIRON/DRAGADOS LLC

Stantec
Engineered by Stantec Consulting Services Inc.
Texas Registered Engineering Firm F-6324

Texas Department of Transportation
© 2017
SHEET 7 OF 9

FED. RD. DIV. NO.	FEDERAL AID PROJECT NO.		SHEET NO.
6	HP X597(1)		DRN 043
STATE	STATE DIST. NO.	COUNTY	
TEXAS	CRP	NUECES	
CONT.	SECT	JOB	HIGHWAY NO.
0101	06	095	US181

PROJECT: US 181 HARBOR BRIDGE
Checked by: Date:
Back-Checked by: Date:
Corrected by: Date:
Verified by: Date:
Calculations Check Confirmed
Prepared By: Date:
Drawing Checked Against Calculations
REVIEW PHASE: Detail Check, Internal Review, Design Review, TxDOT, Drawing, Report, Other:

Plotted: 6/9/2017 2:04:56 PM
Pen Table: HBR_Pack1A_DRN.tbl
Design File: c:\pw_online\stantec\dms97318\HBR_DRN_LATERALS_LT07.dgn

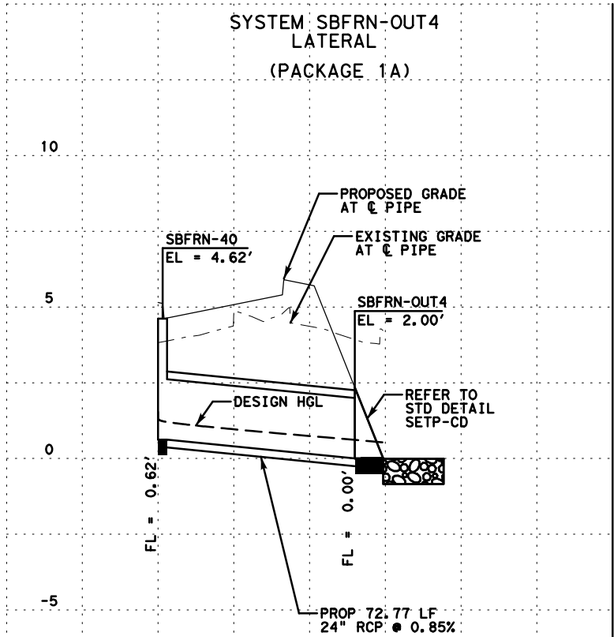

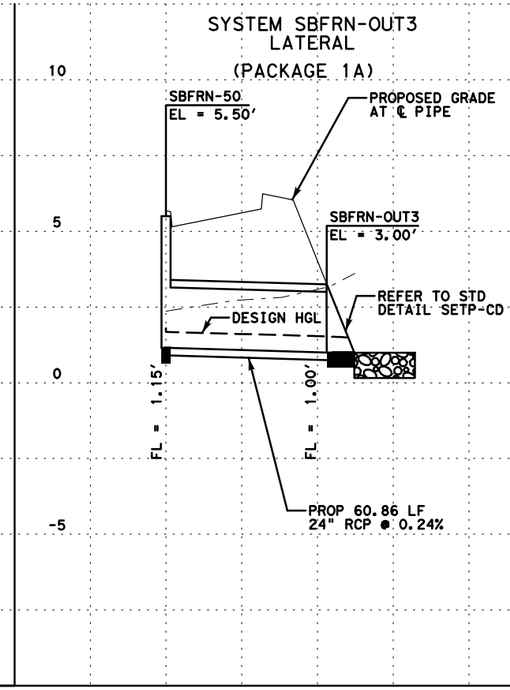

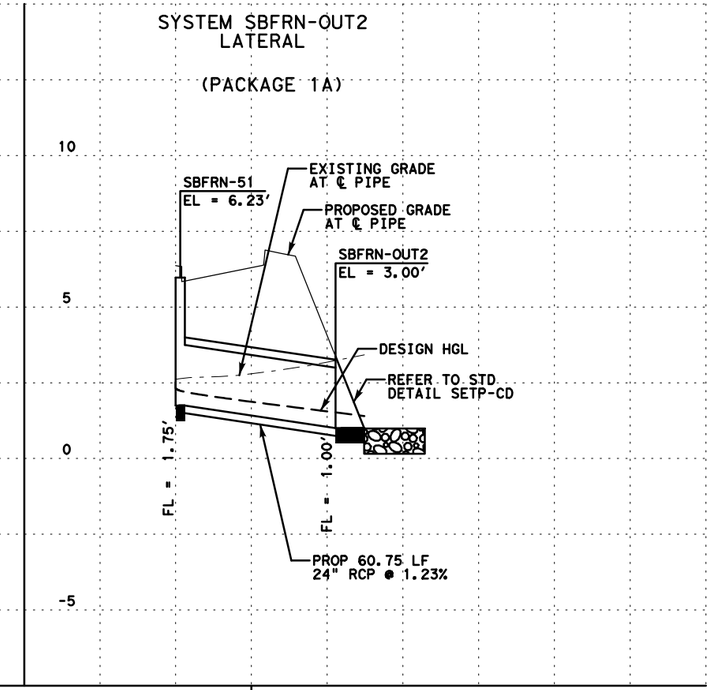

NOTES:
1. DESIGN HGL WAS CALCULATED USING THE RINCON CHANNEL AVERAGE TIDEWATER ELEVATION OF +1.0' AS TAILWATER.
2. THE 10-YR TAILWATER (COSTAL FLOODING ELEVATION) IS +5.10'.
3. REFER TO CORRESPONDING SUBMITTAL PACKAGE FOR PLAN SHEETS.

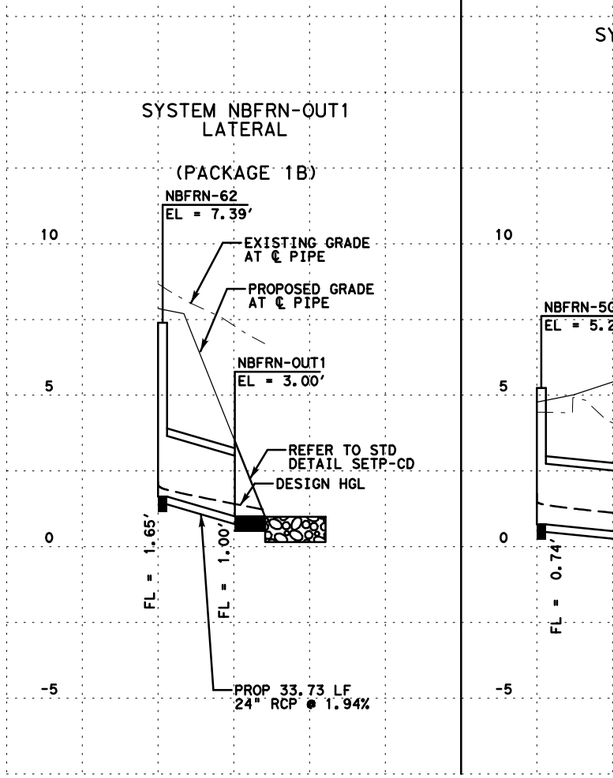

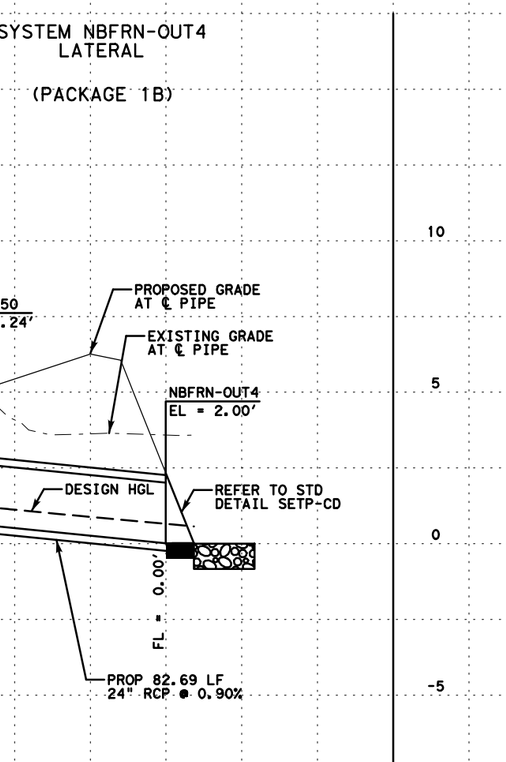

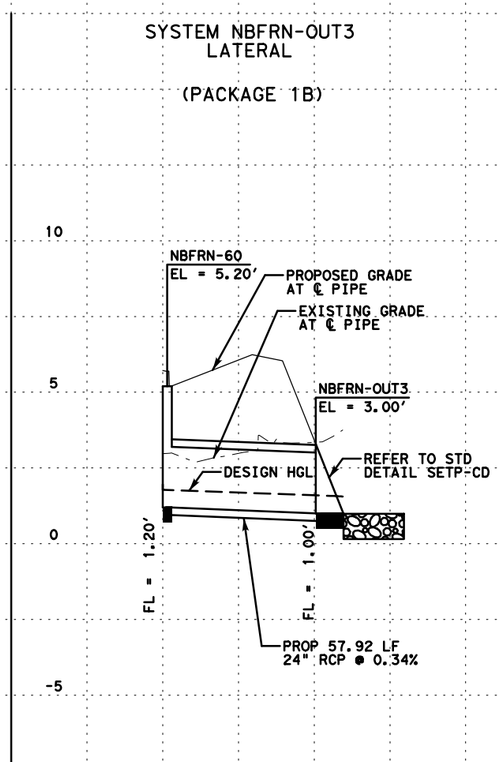

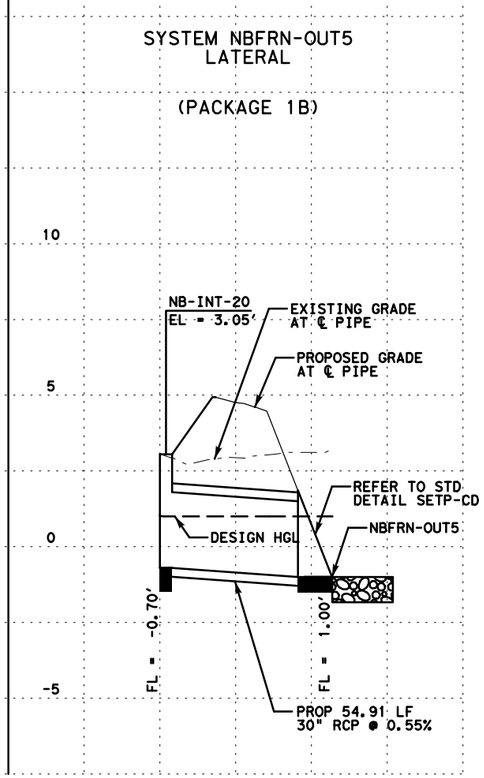

NO.	REVISIONS	BY	DATE

PRELIMINARY
FOR REVIEW ONLY
THESE DOCUMENTS ARE PRELIMINARY AND SUBJECT TO CHANGE. THEY ARE NOT INTENDED FOR CONSTRUCTION OR BIDDING. THEY WERE PREPARED BY, OR UNDER THE SUPERVISION OF:
Engineer: JACEK KWASNIEWSKI
P.E. No.: 95757
Date: 6/9/2017

RELEASE FOR CONSTRUCTION

US 181 HARBOR BRIDGE

DRAINAGE PROFILES & LATERALS

SCALE: 1"=50' H
1"=10' V

FLATIRON/DRAGADOS LLC

Stantec
Engineered by Stantec Consulting Services Inc.
Texas Registered Engineering Firm F-6324

Texas Department of Transportation
© 2017

SHEET 8 OF 9

FED. RD. DIV. NO.	FEDERAL AID PROJECT NO.		SHEET NO.
6	HP X597(1)		DRN 044
STATE	STATE DIST. NO.	COUNTY	
TEXAS	CRP	NUECES	
CONT.	SECT	JOB	HIGHWAY NO.
0101	06	095	US181

PROJECT
US 181 HARBOR BRIDGE

Checked by: Date:
Back-Checked by: Date:
Corrected by: Date:
Verified by: Date:
Calculations Check Confirmed
Calculations Checked Against Drawing
Prepared By: Date:
Other:
Design Review TxDOT
Internal Review
Report
Detail Check
Drawing
REVIEW PHASE

Plotted: 6/9/2017 2:05:04 PM
Pen Table: HBR_Pack1A_DRN.tbl
Design File: c:\pw_online\stantec\ms97318\HBR_DRN_LATERALS_LT08.dgn

SYSTEM BURL-OUT1 LATERALS

(PACKAGE 1B)

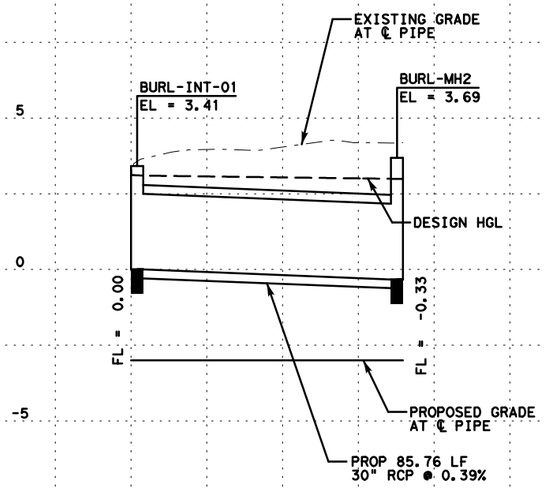

(PACKAGE 1B)

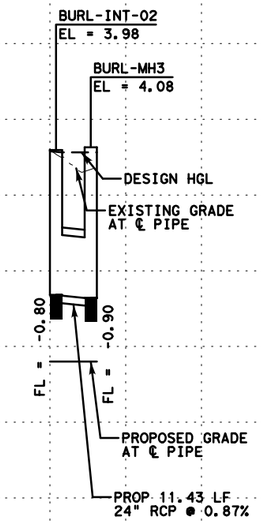

(PACKAGE 1B)

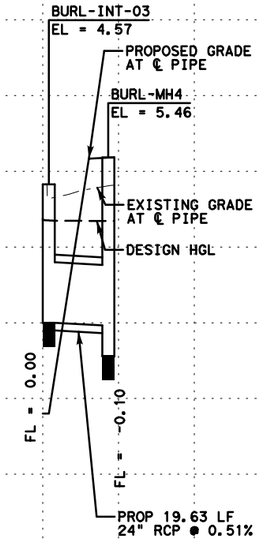

(PACKAGE 1B)

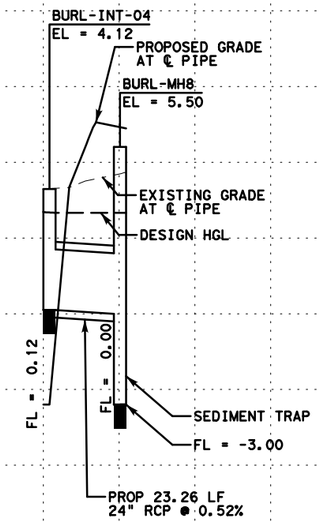

NOTES:
1. DESIGN HGL WAS CALCULATED USING THE RINCON CHANNEL AVERAGE TIDEWATER ELEVATION OF +1.0' AS TAILWATER.
2. THE 10-YR TAILWATER (COSTAL FLOODING ELEVATION) IS +5.10'
3. REFER TO CORRESPONDING SUBMITTAL PACKAGE FOR PLAN SHEETS.

SYSTEM BURL-OUT2 LATERAL

(PACKAGE 1B)

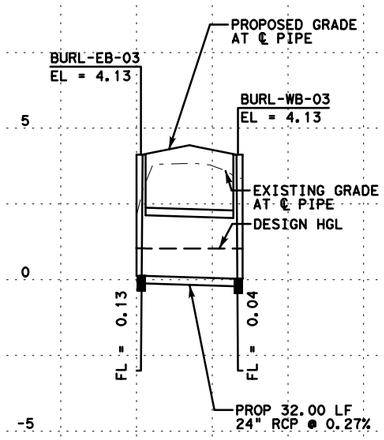

NO.	REVISIONS	BY	DATE

PRELIMINARY
FOR REVIEW ONLY
THESE DOCUMENTS ARE PRELIMINARY AND SUBJECT TO CHANGE. THEY ARE NOT INTENDED FOR CONSTRUCTION OR BIDDING. THEY WERE PREPARED BY, OR UNDER THE SUPERVISION OF:
Engineer: JACEK KWASNIEWSKI
P.E. No.: 95757
Date: 6/9/2017

RELEASE FOR CONSTRUCTION

US 181 HARBOR BRIDGE

DRAINAGE PROFILES & LATERALS

SCALE: 1"=50' H
1"=10' V

FLATIRON/DRAGADOS LLC

Stantec
Engineered by Stantec Consulting Services Inc.
Texas Registered Engineering Firm F-6324

Texas Department of Transportation
© 2017

SHEET 9 OF 9

FED. RD. DIV. NO.	FEDERAL AID PROJECT NO.		SHEET NO.
6	HP X597(1)		DRN 045
STATE	STATE DIST. NO.	COUNTY	
TEXAS	CRP	NUECES	
CONT.	SECT	JOB	HIGHWAY NO.
0101	06	095	US181

PROJECT: US 181 HARBOR BRIDGE

Checked by: Date:
Back-Checked by: Date:
Corrected by: Date:
Verified by: Date:

Calculations Check Confirmed
Drawing Checked Against Calculations
Prepared By: Date:

REVIEW PHASE: ☐ Detail Check ☐ Internal Review ☐ Design Review ☐ TxDOT ☐ Drawing ☐ Report ☐ Other:

Plotted: 6/9/2017 2:05:13 PM
Pen Table: HBR_Pack1A_DRN.tbl
Design File: c:\pw_online\stantec\ms97318\HBR_DRN_LATERALS_LT09.dgn

NOTES:

1. FOR ADDITIONAL HEADWALL DETAILS REFER TO STANDARD DETAIL PW.

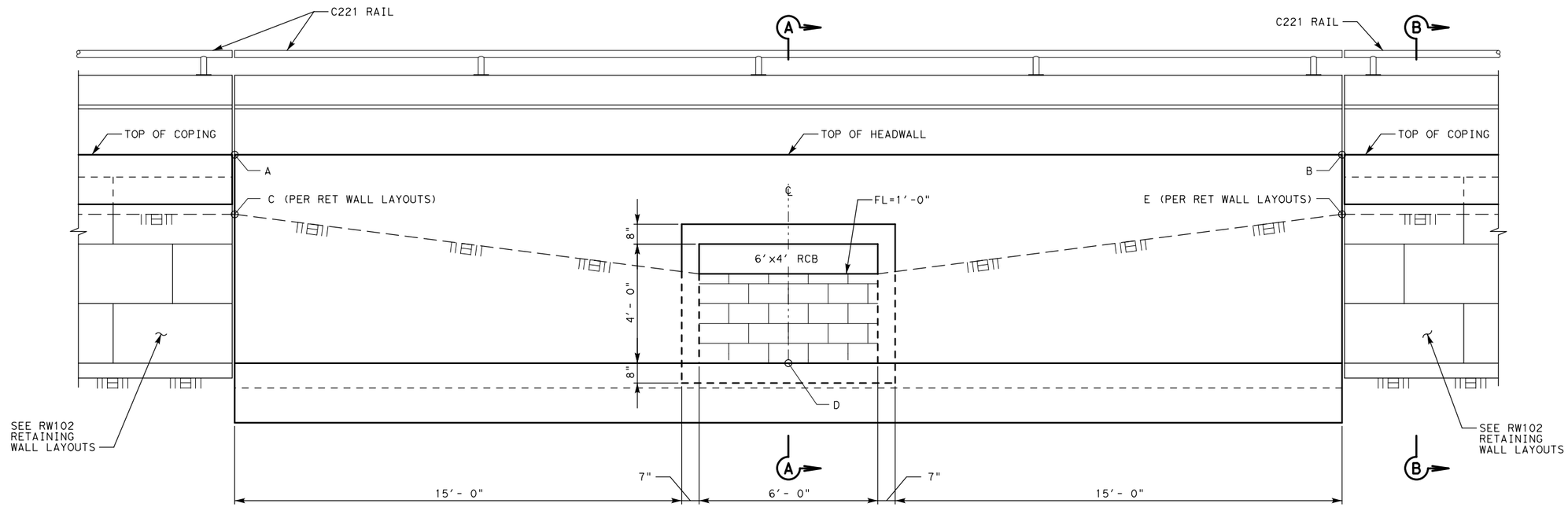

DETAIL 1

N.T.S.

OUTFALL ID	CL STATION	OFFSET (FT)	ALIGNMENT	RCB SPAN (FT)	RCB RISE (FT)	ELE. A (FT)	ELE. B (FT)	ELE. C (FT)	ELE. D (FT)	ELE. E (FT)
CULV-OUT2	1027+53.65	8.5 RT	SBFRN	6	4	6.85	6.19	4.05	-2.0	3.36
CULV-OUT3	1020+34.25	8.5 RT	SBFRN	6	4	6.07	6.52	4.06	-2.0	4.35
CULV-OUT4	1031+11.00	8.5 RT	SBFRN	6	4	5.90	6.04	3.79	-2.0	3.58
CULV-OUT5	1034+71.37	8.5 RT	SBFRN	6	4	7.20	7.33	4.57	-2.0	3.76

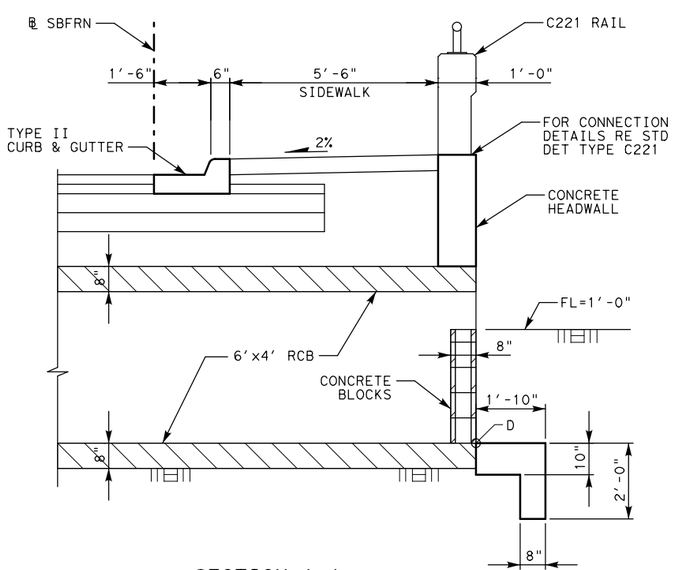

SECTION A-A

N.T.S.

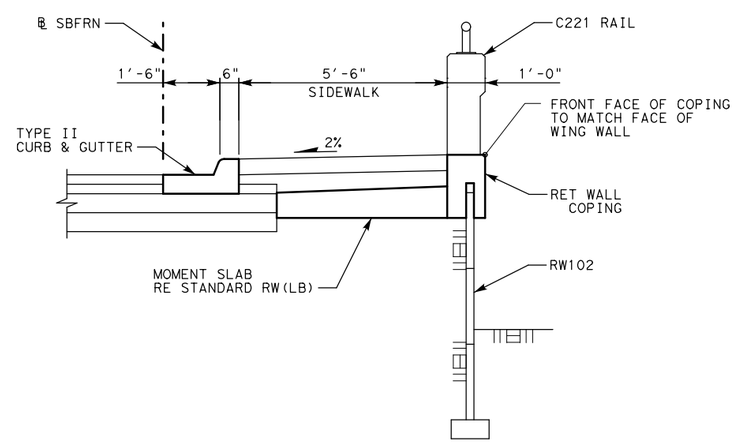

SECTION B-B

N.T.S.

NO.	REVISIONS	BY	DATE

PRELIMINARY
FOR REVIEW ONLY
THESE DOCUMENTS ARE PRELIMINARY AND SUBJECT TO CHANGE. THEY ARE NOT INTENDED FOR CONSTRUCTION OR BIDDING. THEY WERE PREPARED BY, OR UNDER THE SUPERVISION OF:
Engineer: JACEK KWASNIEWSKI
P.E. No.: 95757
Date: 6/9/2017

PREFINAL SUBMITTAL

NOT FOR CONSTRUCTION

US 181 HARBOR BRIDGE

DRAINAGE MISCELLANEOUS DETAILS

SCALE: N.T.S.

FLATIRON/DRAGADOS LLC

Stantec
Engineered by Stantec Consulting Services Inc.
Texas Registered Engineering Firm F-6324

Texas Department of Transportation
© 2017

SHEET 1 OF 9

FED. RD. DIV. NO.	FEDERAL AID PROJECT NO.		SHEET NO.
6	HP X597(1)		DRN 046
STATE	STATE DIST. NO.	COUNTY	
TEXAS	CRP	NUECES	
CONT.	SECT	JOB	HIGHWAY NO.
0101	06	095	US181

PROJECT
US 181 HARBOR BRIDGE

Checked by: Date:
Back-Checked by: Date:
Corrected by: Date:
Verified by: Date:

☐ Detail Check ☐ Internal Review ☐ Design Review ☐ TxDOT
☐ Drawing ☐ Report ☐ Other: _____
Prepared By: Date:
☐ Drawing Checked Against Calculations ☐ Calculations Check Confirmed

REVIEW PHASE

Plotted: 6/9/2017 2:05:22 PM
Pen Table: HBR_Pack1A_DRN.tbl
Design File: c:\pw_online\stantec\dms97318\HBR_DRN_MISC_DET01.dgn

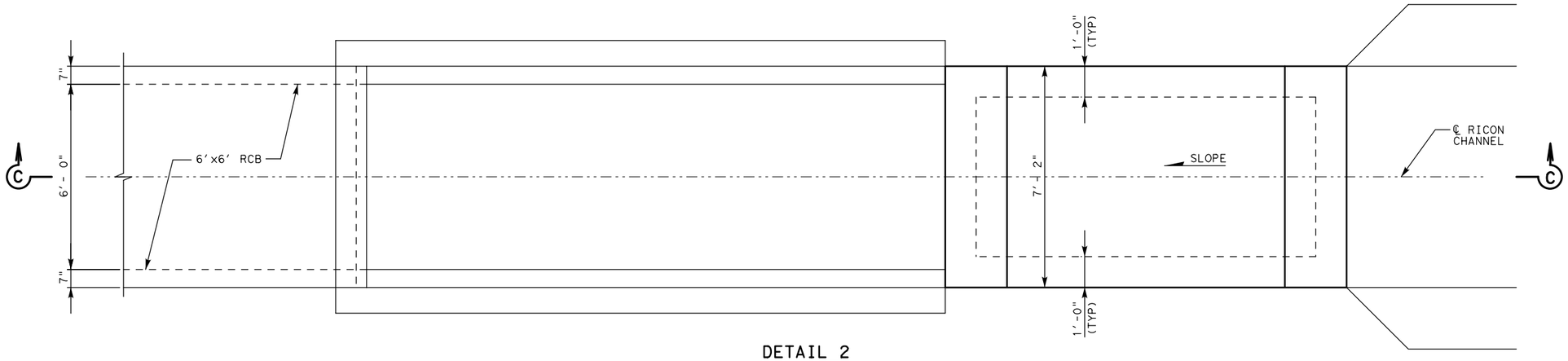

DETAIL 2
N.T.S.

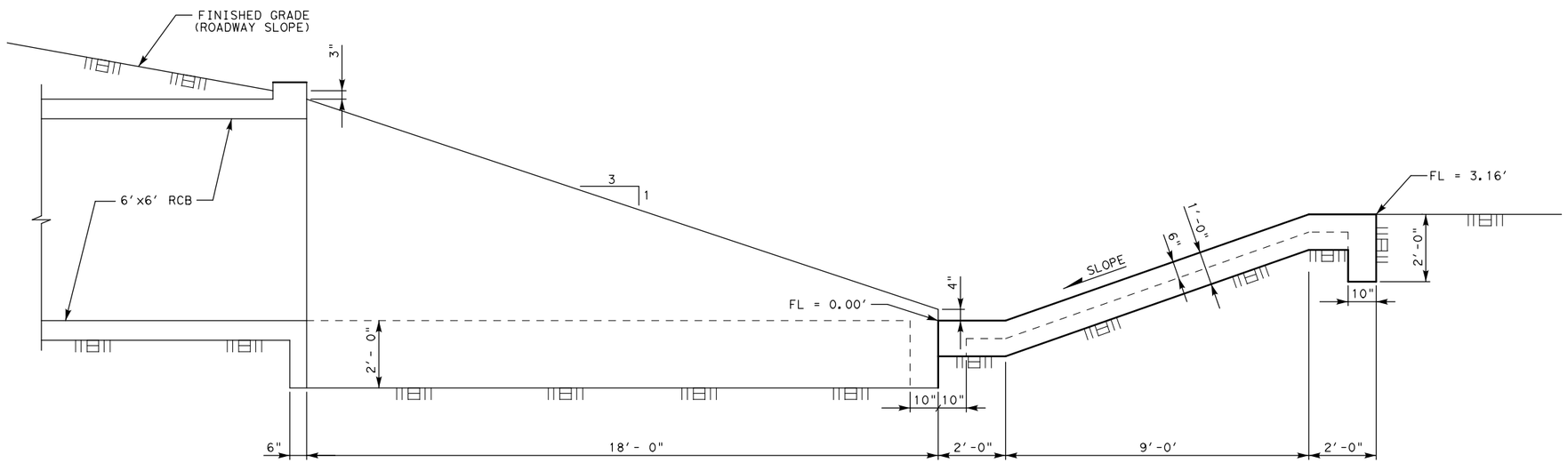

SECTION C-C
N.T.S.

PROJECT
US 181 HARBOR BRIDGE

Checked by: Date:
Back-Checked by: Date:
Corrected by: Date:
Verified by: Date:

☐ Detail Check ☐ Internal Review ☐ Design Review ☐ TxDOT
☐ Drawing ☐ Report ☐ Other: _____
Prepared By: Date:
☐ Drawing Checked Against Calculations ☐ Calculations Check Confirmed

REVIEW PHASE

Plotted: 6/9/2017 2:05:30 PM
Pen Table: HBR_Pack1A_DRN.tbl
Design File: c:\pw_online\stantec\dms97318\HBR_DRN_MISC_DET02.dgn

NO.	REVISIONS	BY	DATE

PRELIMINARY
FOR REVIEW ONLY
THESE DOCUMENTS ARE PRELIMINARY AND SUBJECT TO CHANGE. THEY ARE NOT INTENDED FOR CONSTRUCTION OR BIDDING. THEY WERE PREPARED BY, OR UNDER THE SUPERVISION OF:
Engineer: JACEK KWASNIEWSKI
P.E. No.: 95757
Date: 6/9/2017

PREFINAL SUBMITTAL

NOT FOR CONSTRUCTION

US 181 HARBOR BRIDGE

DRAINAGE MISCELLANEOUS DETAILS

SCALE: N.T.S.

FLATIRON/DRAGADOS LLC

Stantec
Engineered by Stantec Consulting Services Inc.
Texas Registered Engineering Firm F-6324

Texas Department of Transportation
© 2017
SHEET 1 OF 9

FED. RD. DIV. NO.	FEDERAL AID PROJECT NO.		SHEET NO.
6	HP X597(1)		DRN 047
STATE	STATE DIST. NO.	COUNTY	
TEXAS	CRP	NUECES	
CONT.	SECT	JOB	HIGHWAY NO.
0101	06	095	US181

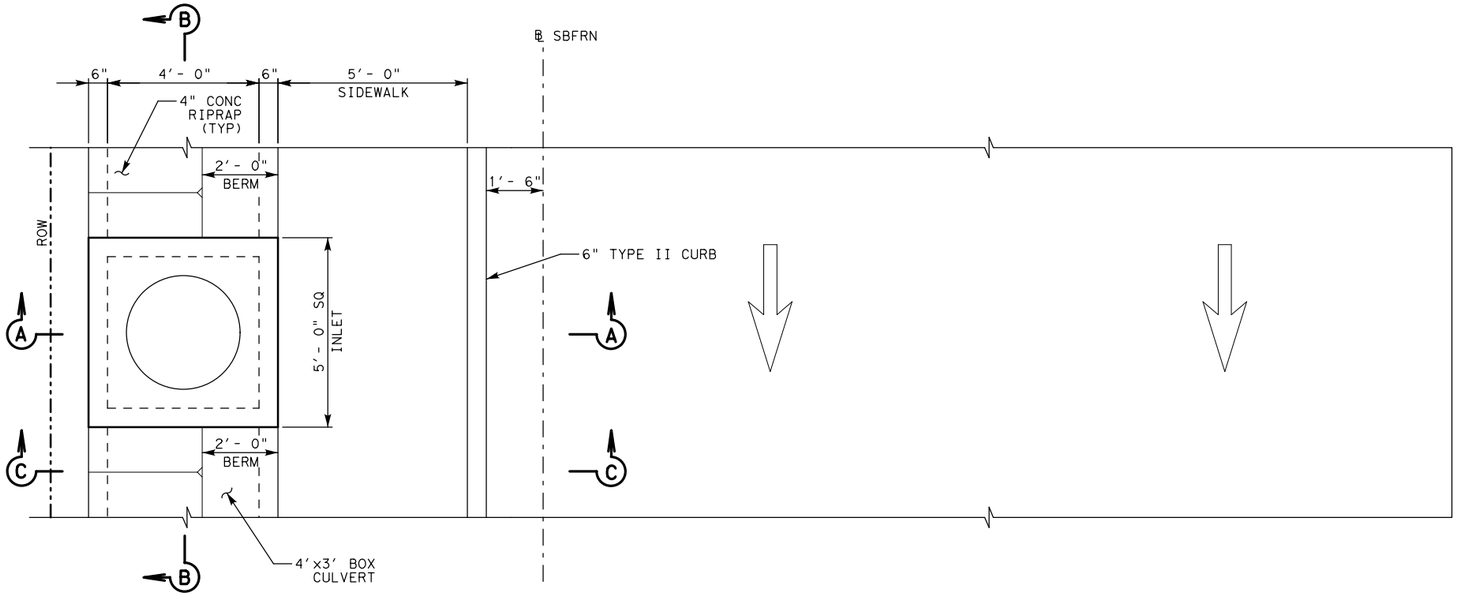

PLAN
N.T.S.

DETAIL 3
N.T.S.

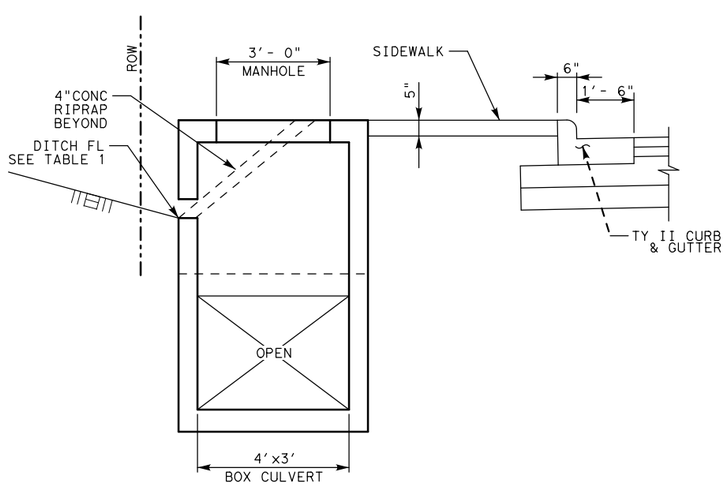

SECTION A-A
N.T.S.

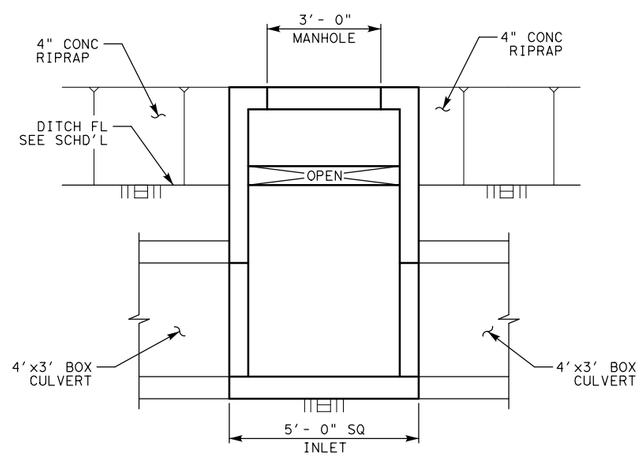

SECTION B-B
N.T.S.

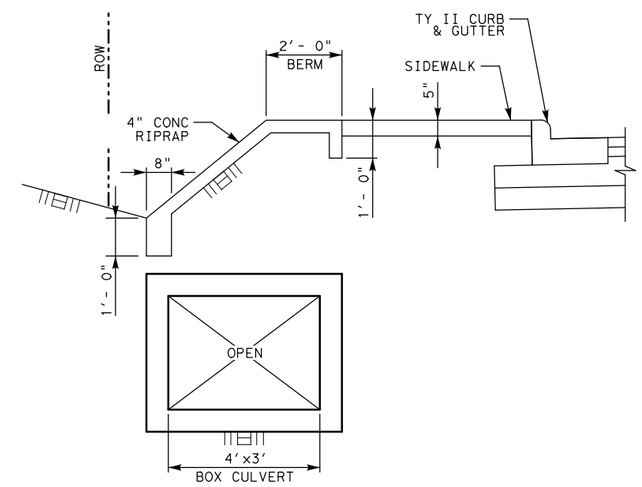

SECTION C-C
N.T.S.

TABLE 1

INLET ID	INLET STATION	OFFSET (FT)	ALIGNMENT	DITCH FL (FT)
TANK-A1	1072+70.12	18.15 RT	SBFRN	3.7
TANK-A2	1071+46.29	12.76 RT	SBFRN	3.8
TANK-A3	1068+80.76	11.00 RT	SBFRN	7.1
TANKA-4	1066+16.26	11.45 RT	SBFRN	2.9
TANK-A5	1064+92.86	10.96 RT	SBFRN	1.0

PROJECT
US 181
HARBOR BRIDGE

Checked by: Date:
Back-Checked by: Date:
Corrected by: Date:
Verified by: Date:

☐ Detail Check ☐ Internal Review ☐ Design Review ☐ TxDOT
☐ Drawing ☐ Report ☐ Other:
Prepared By: Date:
☐ Drawing Checked Against Calculations ☐ Calculations Check Confirmed
REVIEW PHASE

Plotted: 6/9/2017 2:05:39 PM
Pen Table: HBR_Pack1A_DRN.tbl
Design File: c:\pw_online\stantec\dms97318\HBR_DRN_MISC_DET03.dgn

NO.	REVISIONS	BY	DATE

PRELIMINARY
FOR REVIEW ONLY
THESE DOCUMENTS ARE PRELIMINARY AND SUBJECT TO CHANGE. THEY ARE NOT INTENDED FOR CONSTRUCTION OR BIDDING. THEY WERE PREPARED BY, OR UNDER THE SUPERVISION OF:
Engineer: JACEK KWASNIEWSKI
P.E. No.: 95757
Date: 6/9/2017

PREFINAL SUBMITTAL
NOT FOR CONSTRUCTION

US 181 HARBOR BRIDGE

DRAINAGE MISCELLANEOUS DETAILS

SCALE: N.T.S.

FLATIRON/DRAGADOS LLC

Stantec
Engineered by Stantec Consulting Services Inc.
Texas Registered Engineering Firm F-6324

Texas Department of Transportation
© 2017
SHEET 1 OF 9

FED. RD. DIV. NO.	FEDERAL AID PROJECT NO.		SHEET NO.
6	HP X597(1)		DRN 048
STATE	STATE DIST. NO.	COUNTY	
TEXAS	CRP	NUECES	
CONT.	SECT	JOB	HIGHWAY NO.
0101	06	095	US181