Work Package	**Package 1B: North of Ship Channel - Remaining Roadworks – Drainage - RD01BD**
Revision	**A0**
Submittal Stage	**Advance Status**
Date	**04/30/2017**

SHEET No.	DESCRIPTION	REVISION No.
GENERAL		
GEN 001	TITLE SHEET	A0
GEN 002	INDEX OF SHEETS	A0
ROADWAY		
RDWY 001-004	PROJECT LAYOUTS	A0
RDWY 005-012	TYPICAL SECTIONS	A0
RDWY 013	HORIZONTAL ALIGNMENT DATA SHEET US181	A0
RDWY 014	HORIZONTAL ALIGNMENT DATA SHEET RAMPS	A0
RDWY 015	HORIZONTAL ALIGNMENT DATA SHEET FTG ROADS	A0
RDWY 016	HORIZONTAL ALIGNMENT DATA SHEET CROSS STREETS	A0
RDWY 017-019	HORIZONTAL ALIGNMENT DATA SHEET DRIVEWAYS	A0
RDWY 020-028	PLAN AND PROFILE US181	A0
RDWY 029-035	PLAN AND PROFILE NBFRN	A0
RDWY 036-037	PLAN AND PROFILE BENBXR	A0
RDWY 038	PLAN AND PROFILE BESBER	A0
RDWY 039-040	PLAN AND PROFILE BURLESON	A0
RDWY 041	PLAN AND PROFILE BUUN	A0
RDWY 042	PLAN AND PROFILE BUUS	A0
RDWY 043-044	PLAN AND PROFILE BREAKWATER	A0
RDWY 045	PLAN AND PROFILE SEAGULL	A0
RDWY 046	PLAN AND PROFILE BRIDGEPORT	A0
RDWY 047	PLAN AND PROFILE ECAUSEWAY	A0
RDWY 048-052	BURLESON INTERSECTION LAYOUT	A0
RDWY 053-054	BURLESON GRADING PLAN	A0
RDWY 055	BRIDGEPORT LAYOUT	A0
RDWY 056	PLAN LAYOUT MISC	A0
RDWY 057	DRIVEWAY TABLE	A0
RDWY 058-061	DRIVEWAY PROFILES NBFRN	A0
RDWY 062	MISCELLANEOUS DETAILS SLEEPER SLAB	A0
RDWY 063	MISCELLANEOUS DETAILS PAYMENT TRANSITIONS	A0
RDWY 064	MISCELLANEOUS DETAILS GORE AND ISLAND RIP RAP	A0

SHEET No.	DESCRIPTION	REVISION No.
DRAINAGE		
DRN 001-007	HYDRAULICA DATA SHEET	A0
DRN 008-012	DRAINAGE AREA MAP	A0
DRN 013	DRAINAGE AREA MAP (BURLESON)	A0
DRN 014-015	DRAINAGE PLAN & PROFILE (BENBXR)	A0
DRN 016-020	DRAINAGE PLAN & PROFILE (NBFRN)	A0
DRN 021-022	DRAINAGE PLAN & PROFILE (BURLESON)	A0
DRN 023-031	DRAINAGE PROFILES & LATERALS	A0

SEE THE PROJECT WIDE STANDARDS AND SHARED DETAILS RFC PACKAGE FOR THE REQUIRED STANDARDS AND DETAILS FOR THIS PACKAGE

PRELIMINARY
FOR REVIEW ONLY
THESE DOCUMENTS ARE PRELIMINARY AND SUBJECT TO CHANGE. THEY ARE NOT INTENDED FOR CONSTRUCTION OR BIDDING. THEY WERE PREPARED BY, OR UNDER THE SUPERVISION OF:
Engineer: DALE A VEHLEWALD
P.E. No.: 116649
Date: 4/26/2017

ADVANCED STATUS

NOT FOR CONSTRUCTION

US 181 HARBOR BRIDGE

INDEX OF SHEETS (PACKAGE 1.0.02)

FLATIRON/DRAGADOS LLC

Stantec
Engineered by Stantec Consulting Services Inc.
Texas Registered Engineering Firm F-6324

Texas Department of Transportation
© 2017
SHEET 1 OF 1

FED. RD. DIV. NO.	FEDERAL AID PROJECT NO.		SHEET NO.
6	HP X597(1)		GEN 002
STATE	STATE DIST. NO.	COUNTY	
TEXAS	CRP	NUECES	
CONT.	SECT	JOB	HIGHWAY NO.
0101	06	095	US181

Plotted: 4/26/2017 2:15:25 PM
Pen Table: HBR_GEN_PACK1B_INDEX.tbl
Design File: pw:\\stantec-sc-pw.bentley.com:stantec-sc-pw\Documents\01 Projects\HBR\Build Work\Design\04-General\04.01-Sheets\ALL OF NORTH - 2-24-17 - North Package\PACKAGE 1B\HBR_GEN_PACK1B_INDEX01.dgn

DRAINAGE AREA COMPUTATIONS (10-YR)

ID	RUNOFF COEFFICIENT	DRAINAGE AREA	TIME OF CONC.	TIME USED	INTENSITY	DISCHARGE
		AC	MIN	MIN	IN/HR	CFS
NB-US181-15	0.9	0.32	1.8	10	6.33	1.80
NB-US181-16	0.9	0.37	2.0	10	6.33	2.12
NB-US181-17	0.9	0.22	1.5	10	6.33	1.24
NB-US181-18	0.9	0.27	1.2	10	6.33	1.52

DRAINAGE AREA COMPUTATIONS (10-YR)

ID	RUNOFF COEFFICIENT	DRAINAGE AREA	TIME OF CONC.	TIME USED	INTENSITY	DISCHARGE
		AC	MIN	MIN	IN/HR	CFS
SB-US181-11B	0.9	0.13	2.1	10	6.33	0.74
SB-US181-13	0.9	0.12	2.1	10	6.33	0.66
SB-US181-14	0.9	0.10	2.0	10	6.33	0.55
SB-US181-17	0.9	0.27	1.6	10	6.33	1.53
SB-US181-18	0.9	0.22	1.5	10	6.33	1.27
SB-US181-19	0.9	0.23	1.6	10	6.33	1.32
SB-US181-20	0.9	0.26	1.4	10	6.33	1.48

DRAINAGE AREA COMPUTATIONS (10-YR)

ID	RUNOFF COEFFICIENT	DRAINAGE AREA	TIME OF CONC.	TIME USED	INTENSITY	DISCHARGE
		AC	MIN	MIN	IN/HR	CFS
BURL-EB-01EX	0.9	0.24	3.2	10	6.33	1.38
BURL-EB-02	0.9	0.31	3.2	10	6.33	1.74
BURL-EB-03	0.9	0.12	3.2	10	6.33	0.68
BURL-WB-01EX	0.9	0.25	3.2	10	6.33	1.41
BURL-WB-02	0.9	0.33	3.2	10	6.33	1.89
BURL-WB-03	0.9	0.09	3.2	10	6.33	0.50

DRAINAGE AREA COMPUTATIONS (10-YR)

ID	RUNOFF COEFFICIENT	DRAINAGE AREA	TIME OF CONC.	TIME USED	INTENSITY	DISCHARGE
		AC	MIN	MIN	IN/HR	CFS
BRPT-01	0.9	0.02	5.7	10	6.33	0.13
BRPT-02	0.9	0.02	5.7	10	6.33	0.14
BRPT-03	0.9	0.03	5.7	10	6.33	0.18
BRPT-04	0.9	0.03	5.7	10	6.33	0.18
BRPT-05	0.9	0.03	5.7	10	6.33	0.19
BRPT-06	0.9	0.09	5.7	10	6.33	0.50
BRPT-07	0.9	0.03	5.7	10	6.33	0.17

DRAINAGE AREA COMPUTATIONS (10-YR)

ID	RUNOFF COEFFICIENT	DRAINAGE AREA	TIME OF CONC.	TIME USED	INTENSITY	DISCHARGE
		AC	MIN	MIN	IN/HR	CFS
BENBXR-08	0.9	0.11	2.8	10	6.33	0.62
BENBXR-09	0.9	0.10	2.5	10	6.33	0.58
BENBXR-10	0.9	0.07	2.2	10	6.33	0.39
BENBXR-10A	0.9	0.10	2.2	10	6.33	0.59
BENBXR-11	0.9	0.05	2.2	10	6.33	0.29
BENBXR-12	0.9	0.13	2.0	10	6.33	0.76
BENBXR-13	0.9	0.19	1.6	10	6.33	1.07

DRAINAGE AREA COMPUTATIONS (10-YR)

ID	RUNOFF COEFFICIENT	DRAINAGE AREA	TIME OF CONC.	TIME USED	INTENSITY	DISCHARGE
		AC	MIN	MIN	IN/HR	CFS
NBFRN-05	0.9	0.43	4.6	10	6.33	2.43
NBFRN-09	0.9	0.22	2.8	10	6.33	1.22
NBFRN-10	0.9	0.26	2.0	10	6.33	1.46
NBFRN-11	0.86	0.46	4.4	10	6.33	2.49
NBFRN-19	0.9	0.35	4.2	10	6.33	1.97
NBFRN-20	0.9	0.22	2.2	10	6.33	1.26
NBFRN-21	0.9	0.26	4.1	10	6.33	1.50
NBFRN-29	0.9	0.39	5.9	10	6.33	2.23
NBFRN-30	0.9	0.16	1.5	10	6.33	0.92
NBFRN-31	0.9	0.35	5.4	10	6.33	2.02
NBFRN-40	0.9	0.24	3.3	10	6.33	1.40
NBFRN-41	0.9	0.29	3.6	10	6.33	1.67
NBFRN-50	0.9	0.73	5.0	10	6.33	4.17
NBFRN-60	0.9	0.45	5.6	10	6.33	2.54
NBFRN-61	0.9	0.39	7.9	10	6.33	2.19
NBFRN-62	0.9	0.15	7.9	10	6.33	0.84
NBFRN-63	0.9	0.17	5.7	10	6.33	0.98

DRAINAGE AREA COMPUTATIONS (10-YR)

ID	RUNOFF COEFFICIENT	DRAINAGE AREA	TIME OF CONC.	TIME USED	INTENSITY	DISCHARGE
		AC	MIN	MIN	IN/HR	CFS
BUSBXR-BD2	0.9	0.13	1.8	10	6.33	0.73
BUSBXR-BD3	0.9	0.09	1.2	10	6.33	0.53
BUSBXR-BD4	0.9	0.11	1.2	10	6.33	0.61
BUSBXR-BD5	0.9	0.10	1.2	10	6.33	0.60
BUSBXR-BD6	0.9	0.15	1.2	10	6.33	0.83
BUSBXR-BD7	0.9	0.14	1.2	10	6.33	0.80
BUSBXR-BD8	0.9	0.14	1.2	10	6.33	0.78

DRAINAGE AREA COMPUTATIONS (10-YR)

ID	RUNOFF COEFFICIENT	DRAINAGE AREA	TIME OF CONC.	TIME USED	INTENSITY	DISCHARGE
		AC	MIN	MIN	IN/HR	CFS
SBFRN-10	0.9	0.44	3.2	10	6.33	2.49
SBFRN-19	0.9	0.41	3.2	10	6.33	2.33
SBFRN-20	0.9	0.33	5.5	10	6.33	1.86
SBFRN-21	0.9	0.33	5.5	10	6.33	1.86
SBFRN-22	0.9	0.32	3.9	10	6.33	1.80
SBFRN-23	0.9	0.43	5.5	10	6.33	2.46
SBFRN-30	0.9	0.65	4.7	10	6.33	3.69
SBFRN-31	0.9	0.24	2.9	10	6.33	1.39
SBFRN-40	0.9	0.61	5.7	10	6.33	3.50
SBFRN-50	0.9	0.32	3.7	10	6.33	1.80
SBFRN-51	0.9	0.42	7.2	10	6.33	2.40
SBFRN-52	0.9	0.43	3.2	10	6.33	2.43
SBFRN-60	0.9	0.46	5.9	10	6.33	2.60
SBFRN-MH14	0.9	0.21	2.0	10	6.33	1.19

DRAINAGE AREA COMPUTATIONS (10-YR)

ID	RUNOFF COEFFICIENT	DRAINAGE AREA	TIME OF CONC.	TIME USED	INTENSITY	DISCHARGE
		AC	MIN	MIN	IN/HR	CFS
DCH181-A2	0.3	0.04	1.9	10	6.33	0.07
DNL0-1	0.3	0.54	1.9	10	6.33	1.02
DNL0-2	0.3	0.05	1.9	10	6.33	0.09
DNL1-1	0.68	0.54	1.9	10	6.33	2.31
DNL1-2	0.75	0.68	1.9	10	6.33	3.26
DNL1-4	0.72	0.66	1.9	10	6.33	2.98
DNL2-1	0.9	0.07	1.5	10	6.33	0.43
DNL2-2	0.9	0.13	1.5	10	6.33	0.74
DNL2-3	0.46	0.19	2.5	10	6.33	0.55
DNL2-5	0.49	0.16	2.5	10	6.33	0.49
DNL2-6	0.54	0.12	2.5	10	6.33	0.43
DNL2-8	0.44	0.35	2.5	10	6.33	0.97
DNR0-1	0.3	0.24	1.9	10	6.33	0.45
DNR0-2	0.3	0.18	1.9	10	6.33	0.35
DNR1-11	0.76	0.44	4.8	10	6.33	2.14
DNR1-13	0.74	0.47	4.8	10	6.33	2.19
DNR1-3	0.9	0.26	2.0	10	6.33	1.48
DNR1-4	0.78	0.15	2.0	10	6.33	0.75
DNR1-5	0.83	0.34	2.0	10	6.33	1.79
DNR1-7	0.73	0.31	2.0	10	6.33	1.44
DNR1-8	0.71	0.26	2.0	10	6.33	1.15
DNR1-9	0.74	0.19	2.0	10	6.33	0.91
DNR2-1	0.3	0.08	1.6	10	6.33	0.14
DNR2-2	0.3	0.21	2.5	10	6.33	0.41

DRAINAGE AREA COMPUTATIONS (10-YR)

ID	RUNOFF COEFFICIENT	DRAINAGE AREA	TIME OF CONC.	TIME USED	INTENSITY	DISCHARGE
		AC	MIN	MIN	IN/HR	CFS
SIDE-1	0.8	2.61	15.0	15	5.36	11.19
SIDE-2	0.3	0.28	2.0	10	6.33	0.52
SIDE-3	0.8	1.54	15.0	15	5.36	6.62
SIDE-4	0.8	2.21	15.0	15	5.36	9.50
SIDE-5	0.3	0.19	2.0	10	6.33	0.36

NOTE:
THESE TABLES CONTAIN HYDRAULIC DATA FOR DRAINAGE SYSTEMS IN PACKAGES 1A AND 1B. REFER TO CORRESPONDING PACKAGE FOR PLAN & PROFILE SHEETS.

NO.	REVISIONS	BY	DATE

PRELIMINARY
FOR REVIEW ONLY
THESE DOCUMENTS ARE PRELIMINARY AND SUBJECT TO CHANGE. THEY ARE NOT INTENDED FOR CONSTRUCTION OR BIDDING. THEY WERE PREPARED BY, OR UNDER THE SUPERVISION OF:
Engineer: JACEK KWASNIEWSKI
P.E. No.: 95757
Date: 4/25/2017

RELEASE FOR CONSTRUCTION

US 181 HARBOR BRIDGE

HYDRAULIC DATA SHEET

FLATIRON/DRAGADOS LLC

Stantec
Engineered by Stantec Consulting Services Inc.
Texas Registered Engineering Firm F-6324

Texas Department of Transportation
© 2017

SHEET 1 OF 7

FED. RD. DIV. NO.	FEDERAL AID PROJECT NO.		SHEET NO.
6	HP X597(1)		DRN 001
STATE	STATE DIST. NO.	COUNTY	
TEXAS	CRP	NUECES	
CONT.	SECT	JOB	HIGHWAY NO.
0101	06	095	US181

PROJECT
US 181 HARBOR BRIDGE

Checked by: Date:
Back-Checked by: Date:
Corrected by: Date:
Verified by: Date:

☐ TxDOT
☐ Detail Check ☐ Internal Review ☐ Design Review
☐ Drawing ☐ Report ☐ Other:
REVIEW PHASE
Prepared By: Date:
☐ Drawing Checked Against Calculations ☐ Calculations Check Confirmed

Plotted: 4/25/2017 3:08:26 PM
Pen Table: HBR_Pack1B_DRN.tbl
Design File: pw:\\stantec-sc-pw.bentley.com:stantec-sc-pw\Documents\01 Projects\HBR\Build Work\Design\08-Drainage\08.01-Sheets\08.01A-North Package\ALTERNATE-B\HBR_DRN_NORTH_HYD01.dgn

NOTE:
THESE TABLES CONTAIN HYDRAULIC DATA FOR DRAINAGE SYSTEMS IN PACKAGES 1A AND 1B. REFER TO CORRESPONDING PACKAGE FOR PLAN & PROFILE SHEETS.

INLET COMPUTATIONS (10-YR)

ID	PROFILE TYPE	TYPE	LIBRARY ITEM DESCRIPTION	DISCHARGE	BYPASS FLOW	CAPACITY	BYPASS NODE ID	CURB DEPRESSION	CURB LENGTH	GRATE LENGTH	GRATE WIDTH	GRATE AREA	COMPUTED PONDED WIDTH	MAX PONDED WITDH	COMPUTED PONDED DEPTH	MAX PONDED DEPTH
				CFS	CFS	CFS		FT	FT	FT	FT	SF	FT	FT	FT	FT
NB-US181-15	On Grade	Grate	POD 4x4 in 5x5 out 4x4 grate	2.02	0.22	1.8	BENBXR-13	n/a	n/a	4.17	4.17	8.19	8.61	9.92	0.17	0.5
NB-US181-16	On Grade	Grate	POD 4x4 in 5x5 out 4x4 grate	2.17	0.22	1.95	NB-US181-15	n/a	n/a	4.17	4.17	8.19	7.97	10	0.16	0.5
NB-US181-17	On Grade	Grate	POD 4x4 in 5x5 out 4x4 grate	1.29	0.04	1.25	NB-US181-16	n/a	n/a	4.17	4.17	8.19	6.05	10	0.12	0.5
NB-US181-18	On Grade	Grate	POD 4x4 in 5x5 out 4x4 grate	1.52	0.06	1.46	NB-US181-17	n/a	n/a	4.17	4.17	8.19	6.18	10	0.13	0.5

INLET COMPUTATIONS (10-YR)

ID	PROFILE TYPE	TYPE	LIBRARY ITEM DESCRIPTION	DISCHARGE	BYPASS FLOW	CAPACITY	BYPASS NODE ID	CURB DEPRESSION	CURB LENGTH	GRATE LENGTH	GRATE WIDTH	GRATE AREA	COMPUTED PONDED WIDTH	MAX PONDED WITDH	COMPUTED PONDED DEPTH	MAX PONDED DEPTH
				CFS	CFS	CFS		FT	FT	FT	FT	SF	FT	FT	FT	FT
SB-US181-17	On Grade	Grate	PSL FG SFG 4x4 in 5x5 out 4x4 grate	1.58	0.09	1.49	SBFRN-23	n/a	n/a	4.17	4.17	8.19	6.88	8	0.14	0.5
SB-US181-18	On Grade	Grate	POD 4x4 in 5x5 out 4x4 grate	1.31	0.05	1.26	SB-US181-17	n/a	n/a	4.17	4.17	8.19	6.22	8	0.12	0.5
SB-US181-19	On Grade	Grate	POD 4x4 in 5x5 out 4x4 grate	1.36	0.05	1.31	SB-US181-18	n/a	n/a	4.17	4.17	8.19	6.11	9	0.12	0.5
SB-US181-20	On Grade	Grate	POD 4x4 in 5x5 out 4x4 grate	1.48	0.04	1.44	SB-US181-19	n/a	n/a	4.17	4.17	8.19	5.84	10	0.13	0.5

INLET COMPUTATIONS (10-YR)

ID	PROFILE TYPE	TYPE	LIBRARY ITEM DESCRIPTION	DISCHARGE	BYPASS FLOW	CAPACITY	BYPASS NODE ID	CURB DEPRESSION	CURB LENGTH	GRATE LENGTH	GRATE WIDTH	GRATE AREA	COMPUTED PONDED WIDTH	MAX PONDED WITDH	COMPUTED PONDED DEPTH	MAX PONDED DEPTH
				CFS	CFS	CFS		FT	FT	FT	FT	SF	FT	FT	FT	FT
BENBXR-08	On Grade	Grate	PSL FG SFG 4x4 in 5x5 out 4x4 grate	0.62	0.02	0.61	BENBXR-09	n/a	n/a	4.17	4.17	8.19	7.14	8	0.14	0.5
BENBXR-09	On Grade	Grate	PSL FG SFG 4x4 in 5x5 out 4x4 grate	0.6	0.02	0.58	BENBXR-10A	n/a	n/a	4.17	4.17	8.19	7.05	8	0.14	0.5
BENBXR-10	On Grade	Grate	PSL FG SFG 4x4 in 5x5 out 4x4 grate	0.39	0	0.39	BENBXR-10A	n/a	n/a	4.17	4.17	8.19	5.23	8	0.13	0.5
BENBXR-10A	Sag	Grate	PSL FG SFG 4x4 in 5x5 out 4x4 grate	0.61	0	9.1		n/a	n/a	4.17	4.17	8.19	6.2	8	0.08	0.5
BENBXR-11	On Grade	Grate	PSL FG SFG 4x4 in 5x5 out 4x4 grate	0.33	0	0.33	BENBXR-10	n/a	n/a	4.17	4.17	8.19	5.73	8	0.14	0.5
BENBXR-12	On Grade	Grate	PSL FG SFG 4x4 in 5x5 out 4x4 grate	0.84	0.04	0.81	BENBXR-11	n/a	n/a	4.17	4.17	8.19	8.01	9.5	0.16	0.5
BENBXR-13	On Grade	Grate	PSL FG SFG 4x4 in 5x5 out 4x4 grate	1.29	0.08	1.2	BENBXR-12	n/a	n/a	4.17	4.17	8.19	7.54	9.5	0.15	0.5

INLET COMPUTATIONS (10-YR)

ID	PROFILE TYPE	TYPE	LIBRARY ITEM DESCRIPTION	DISCHARGE	BYPASS FLOW	CAPACITY	BYPASS NODE ID	CURB DEPRESSION	CURB LENGTH	GRATE LENGTH	GRATE WIDTH	GRATE AREA	COMPUTED PONDED WIDTH	MAX PONDED WITDH	COMPUTED PONDED DEPTH	MAX PONDED DEPTH
				CFS	CFS	CFS		FT	FT	FT	FT	SF	FT	FT	FT	FT
BUSBXR-BD1	On Grade	Grate	PCO Curb Inlet w/ 2 Ext (3x5)	1.5	0.29	1.21	BUSBXR-BD2	n/a	n/a	1.14	3.44	3.9	7.62	8	0.15	0.5
BUSBXR-BD2	On Grade	Grate	Bridge Drain (Cast)	1.02	0.12	0.9	BUSBXR-BD3	n/a	n/a	1.14	3.44	3.9	6.34	8	0.13	0.5
BUSBXR-BD3	On Grade	Grate	Bridge Drain (Cast)	0.65	0.03	0.61	BUSBXR-BD4	n/a	n/a	1.14	3.44	3.9	5.2	8	0.1	0.5
BUSBXR-BD4	On Grade	Grate	Bridge Drain (Cast)	0.64	0.03	0.61	BUSBXR-BD5	n/a	n/a	1.14	3.44	3.9	5.06	8	0.1	0.5
BUSBXR-BD5	On Grade	Grate	Bridge Drain (Cast)	0.62	0.02	0.6	BUSBXR-BD6	n/a	n/a	1.14	3.44	3.9	4.79	8	0.1	0.5
BUSBXR-BD6	On Grade	Grate	Bridge Drain (Cast)	0.85	0.06	0.8	BUSBXR-BD7	n/a	n/a	1.14	3.44	3.9	5.42	8	0.11	0.5
BUSBXR-BD7	On Grade	Grate	Bridge Drain (Cast)	0.86	0.07	0.79	BUSBXR-BD8	n/a	n/a	1.14	3.44	3.9	5.63	8	0.11	0.5
BUSBXR-BD8	On Grade	Grate	Bridge Drain (Cast)	0.85	0.07	0.78	SBFRN-19	n/a	n/a	1.14	3.44	3.9	5.61	8	0.11	0.5

INLET COMPUTATIONS (10-YR)

ID	PROFILE TYPE	TYPE	LIBRARY ITEM DESCRIPTION	DISCHARGE	BYPASS FLOW	CAPACITY	BYPASS NODE ID	CURB DEPRESSION	CURB LENGTH	GRATE LENGTH	GRATE WIDTH	GRATE AREA	COMPUTED PONDED WIDTH	MAX PONDED WITDH	COMPUTED PONDED DEPTH	MAX PONDED DEPTH
				CFS	CFS	CFS		FT	FT	FT	FT	SF	FT	FT	FT	FT
BURL-EB-01EX	Sag	Curb	PCO Curb Inlet w/ 2 Ext (3x5)	1.38	0	6.26		0.25	5	n/a	n/a	n/a	7.49	13.5	0.18	0.5
BURL-EB-02	On Grade	Curb	PCO Curb Inlet w/ 2 Ext (3x5)	1.74	0	1.74	BURL-EB-01	0.25	14	n/a	n/a	n/a	9.47	13.5	0.19	0.5
BURL-EB-03	On Grade	Curb	PCO Curb Inlet (3x5)	0.68	0.01	0.67		0.25	5	n/a	n/a	n/a	6.52	13.5	0.13	0.5
BURL-INT-01	Sag	Grate	PAZD FG 4x4-4	15.88	0	9.1		n/a	n/a	4	4	8.2	16.41	20	0.72	0.5
BURL-INT-02	Sag	Grate	PAZD FG 4x4-4	4.1	0	9.1		n/a	n/a	4	4	8.2	12.84	20	0.29	0.5
BURL-INT-03	Sag	Grate	PAZD FG 4x4-4	4.42	0	9.1		n/a	n/a	4	4	8.2	12.09	20	0.31	0.5
BURL-INT-04	Sag	Grate	PAZD FG 4x4-4	0.9	0	9.1		n/a	n/a	4	4	8.2	16.70	20	0.11	0.5
BURL-WB-01EX	Sag	Curb	PCO Curb Inlet (3x5)	1.41	0	6.26		0.25	5	n/a	n/a	n/a	0.06	13.5	0.18	0.5
BURL-WB-02	On Grade	Curb	PCO Curb Inlet w/ 2 Ext (3x5)	1.89	0	1.89	BURL-WB-01	0.25	14	n/a	n/a	n/a	9.76	13.5	0.2	0.5
BURL-WB-03	On Grade	Curb	PCO Curb Inlet (3x5)	0.5	0	0.5		0.25	5	n/a	n/a	n/a	5.83	13.5	0.12	0.5

INLET COMPUTATIONS (10-YR)

ID	PROFILE TYPE	TYPE	LIBRARY ITEM DESCRIPTION	DISCHARGE	BYPASS FLOW	CAPACITY	BYPASS NODE ID	CURB DEPRESSION	CURB LENGTH	GRATE LENGTH	GRATE WIDTH	GRATE AREA	COMPUTED PONDED WIDTH	MAX PONDED WITDH	COMPUTED PONDED DEPTH	MAX PONDED DEPTH
				CFS	CFS	CFS		FT	FT	FT	FT	SF	FT	FT	FT	FT
NB-INT-01	Sag	Grate	PAZD FG 4x4-4	5	0	9.1		n/a	n/a	4	4	8.2	14.97	20	0.34	0.5
NB-INT-03	Sag	Grate	PAZD FG 4x4-4	25	0	9.1		n/a	n/a	4	4	8.2	0	20	1.29	0.5
NB-INT-04	Sag	Grate	PAZD FG 4x4-4	25.27	0	9.1		n/a	n/a	4	4	8.2	69.58	20	1.32	0.5
NB-INT-05	Sag	Grate	PAZD FG 4x4-4	18.32	0	9.1		n/a	n/a	4	4	8.2	241.62	20	0.8	0.5
NB-INT-06	Sag	Grate	PAZD FG 4x4-4	4.4	0	9.1		n/a	n/a	4	4	8.2	3.17	20	0.31	0.5
NB-INT-09	Sag	Grate	PAZD FG 4x4-4	10.4	0	9.1		n/a	n/a	4	4	8.2	165.66	20	0.55	0.5
NB-INT-10	Sag	Grate	PAZD FG 4x4-4	5.2	0	9.1		n/a	n/a	4	4	8.2	22.57	20	0.34	0.5
NB-INT-11	Sag	Grate	PAZD FG 4x4-4	9.8	0	9.1		n/a	n/a	4	4	8.2	10.17	20	0.53	0.5
NB-INT-19	Sag	Grate	PAZD FG 4x4-4	5	0	9.1		n/a	n/a	4	4	8.2	0	13.5	0.34	0.5
NB-INT-20	Sag	Grate	PAZD FG 4x4-4	5	0	9.1		n/a	n/a	4	4	8.2	0	13.5	0.34	0.5

DESIGN IN PROGRESS
(PACKAGE 1B)

NO.	REVISIONS	BY	DATE

PRELIMINARY
FOR REVIEW ONLY
THESE DOCUMENTS ARE PRELIMINARY AND SUBJECT TO CHANGE. THEY ARE NOT INTENDED FOR CONSTRUCTION OR BIDDING. THEY WERE PREPARED BY, OR UNDER THE SUPERVISION OF:
Engineer: JACEK KWASNIEWSKI
P.E. No.: 95757
Date: 4/25/2017

RELEASE FOR CONSTRUCTION

US 181 HARBOR BRIDGE

HYDRAULIC DATA SHEET

FLATIRON/DRAGADOS LLC

Stantec
Engineered by Stantec Consulting Services Inc.
Texas Registered Engineering Firm F-6324

Texas Department of Transportation
© 2017

SHEET 2 OF 7

FED. RD. DIV. NO.	FEDERAL AID PROJECT NO.		SHEET NO.
6	HP X597(1)		DRN 002
STATE	STATE DIST. NO.	COUNTY	
TEXAS	CRP	NUECES	
CONT.	SECT	JOB	HIGHWAY NO.
0101	06	095	US181

PROJECT
US 181 HARBOR BRIDGE

Checked by: Date:
Back-Checked by: Date:
Corrected by: Date:
Verified by: Date:

☐ Detail Check ☐ Internal Review ☐ Design Review ☐ TxDOT
☐ Drawing ☐ Report ☐ Other: ____
Prepared By: ____ Date:
☐ Drawing Checked Against Calculations ☐ Calculations Check Confirmed
REVIEW PHASE

Plotted: 4/25/2017 3:08:29 PM
Pen Table: HBR_Packt1B_DRN.tbl
Design File: pw:\\stantec-sc-pw.bentley.com:stantec-sc-pw\Documents\01 Projects\HBR\Build Work\Design\08-Drainage\08.01-Sheets\08.01A-North Package\ALTERNATE-B\HBR_DRN_NORTH_HYD02.dgn

NOTE:
THESE TABLES CONTAIN HYDRAULIC DATA FOR DRAINAGE SYSTEMS IN PACKAGES 1A AND 1B. REFER TO CORRESPONDING PACKAGE FOR PLAN & PROFILE SHEETS.

INLET COMPUTATIONS (10-YR)

ID	PROFILE TYPE	TYPE	LIBRARY ITEM DESCRIPTION	DISCHARGE	BYPASS FLOW	CAPACITY	BYPASS NODE ID	CURB DEPRESSION	CURB LENGTH	GRATE LENGTH	GRATE WIDTH	GRATE AREA	COMPUTED PONDED WIDTH	MAX PONDED WITDH	COMPUTED PONDED DEPTH	MAX PONDED DEPTH
				CFS	CFS	CFS		FT	FT	FT	FT	SF	FT	FT	FT	FT
NBFRN-05	On Grade	Curb	PCO Curb Inlet w/ 2 Ext (3x5)	2.43	0	2.43		0.25	14	n/a	n/a	n/a	11.91	13.5	0.24	0.5
NBFRN-09	On Grade	Curb	PCO Curb Inlet w/ 2 Ext (3x5)	1.22	0	1.22	NBFRN-10	0.25	14	n/a	n/a	n/a	9.21	13.5	0.18	0.5
NBFRN-10	Sag	Curb	PCO Curb Inlet (3x5)	1.46	0	6.26		0.25	5	n/a	n/a	n/a	9.49	13.5	0.19	0.5
NBFRN-11	On Grade	Curb	PCO Curb Inlet w/ 2 Ext (3x5)	2.49	0	2.49	NBFRN-10	0.25	14	n/a	n/a	n/a	12.03	13.5	0.24	0.5
NBFRN-19	On Grade	Curb and Grate	PCU Curb Inlet w/ 2 Ext (3x5)	1.97	0	1.97	NBFRN-20	0.25	14	4.96	1.39	2.29	11.01	13.5	0.22	0.5
NBFRN-20	Sag	Curb and Grate	PCU Curb Inlet (3x5)	1.26	0	10.48		0.25	5	4.96	1.39	2.29	11.15	13.5	0.22	0.5
NBFRN-21	On Grade	Curb and Grate	PCU Curb Inlet w/ 2 Ext (3x5)	1.5	0	1.5	NBFRN-20	0.25	14	4.96	1.39	2.29	9.93	13.5	0.2	0.5
NBFRN-29	On Grade	Curb and Grate	PCU Curb Inlet w/ 2 Ext (3x5)	2.23	0	2.23	NBFRN-30	0.25	14	4.96	1.39	2.29	11.53	13.5	0.23	0.5
NBFRN-30	Sag	Curb and Grate	PCU Curb Inlet (3x5)	0.92	0	10.48		0.25	5	4.96	1.39	2.29	9.03	13.5	0.18	0.5
NBFRN-31	On Grade	Curb and Grate	PCU Curb Inlet w/ 2 Ext (3x5)	2.02	0	2.02	NBFRN-30	0.25	14	4.96	1.39	2.29	11.11	13.5	0.22	0.5
NBFRN-40	Sag	Curb	PCO Curb Inlet (3x5)	1.4	0	6.26		0.25	5	n/a	n/a	n/a	9.19	13.5	0.18	0.5
NBFRN-41	On Grade	Curb	PCO Curb Inlet w/ 1 Ext (Right) (3x5)	1.67	0	1.67	NBFRN-40	0.25	9.5	n/a	n/a	n/a	9.74	13.5	0.19	0.5
NBFRN-50	Sag	Curb and Grate	PCU Curb Inlet w/ 2 Ext (3x5)	4.17	0	17.8		0.25	14	4.96	1.39	2.29	11.25	13.5	0.5	0.5
NBFRN-60	Sag	Curb	PCO Curb Inlet w/ 1 Ext (Right) (3x5)	2.54	0	9.92		0.25	9.5	n/a	n/a	n/a	11.14	13.5	0.2	0.5
NBFRN-61	On Grade	Curb	PCO Curb Inlet w/ 1 Ext (Right) (3x5)	2.19	0	2.19	NBFRN-60	0.25	9.5	n/a	n/a	n/a	11.46	13.5	0.23	0.5
NBFRN-62	On Grade	Curb	PCO Curb Inlet w/ 2 Ext (3x5)	0.84	0	0.84	NBFRN-61	0.25	14	n/a	n/a	n/a	4.29	9.25	0.23	0.5
NBFRN-63	On Grade	Curb	PCO Curb Inlet (3x5)	0.98	0	0.98	BRPT-06	0.25	5	n/a	n/a	n/a	4.55	9.25	0.25	0.5

INLET COMPUTATIONS (10-YR)

ID	PROFILE TYPE	TYPE	LIBRARY ITEM DESCRIPTION	DISCHARGE	BYPASS FLOW	CAPACITY	BYPASS NODE ID	CURB DEPRESSION	CURB LENGTH	GRATE LENGTH	GRATE WIDTH	GRATE AREA	COMPUTED PONDED WIDTH	MAX PONDED WITDH	COMPUTED PONDED DEPTH	MAX PONDED DEPTH
				CFS	CFS	CFS		FT	FT	FT	FT	SF	FT	FT	FT	FT
SBFRN-10	Sag	Curb	PCO Curb Inlet w/ 1 Ext (Left) (3x5)	2.49	0	9.92		0.25	9.5	n/a	n/a	n/a	11.56	13.5	0.2	0.5
SBFRN-19	On Grade	Curb	PCO Curb Inlet w/ 2 Ext (3x5)	2.39	0	2.39	SBFRN-20	0.25	14	n/a	n/a	n/a	9.47	13.5	0.19	0.5
SBFRN-20	Sag	Curb	PCO Curb Inlet w/ 2 Ext (3x5)	1.86	0	13.58		0.25	14	n/a	n/a	n/a	10.74	13.5	0.13	0.5
SBFRN-21	On Grade	Curb	PCO Curb Inlet w/ 2 Ext (3x5)	1.86	0	1.86	SBFRN-20	0.25	14	n/a	n/a	n/a	10.78	13.5	0.22	0.5
SBFRN-22	On Grade	Curb	PCO Curb Inlet w/ 2 Ext (3x5)	1.8	0	1.8	SBFRN-21	0.25	14	n/a	n/a	n/a	10.65	13.5	0.21	0.5
SBFRN-23	On Grade	Curb	PCO Curb Inlet w/ 2 Ext (3x5)	2.56	0	2.56	SBFRN-22	0.25	14	n/a	n/a	n/a	10.18	13.5	0.21	0.5
SBFRN-30	Sag	Curb	PCO Curb Inlet w/ 2 Ext (3x5)	3.69	0	13.58		0.25	14	n/a	n/a	n/a	10.58	13.5	0.21	0.5
SBFRN-31	On Grade	Curb	PCO Curb Inlet w/ 1 Ext (Left) (3x5)	1.39	0	1.39	SBFRN-30	0.25	9.5	n/a	n/a	n/a	10.69	13.5	0.16	0.5
SBFRN-40	Sag	Curb	PCO Curb Inlet (3x5)	3.5	0	6.26		0.25	5	n/a	n/a	n/a	10.92	13.5	0.34	0.5
SBFRN-50	Sag	Curb	PCO Curb Inlet (3x5)	1.8	0	6.26		0.25	5	n/a	n/a	n/a	10.89	13.5	0.22	0.5
SBFRN-51	On Grade	Curb	PCO Curb Inlet w/ 2 Ext (3x5)	2.4	0	2.4	SBFRN-50	0.25	14	n/a	n/a	n/a	11.85	13.5	0.24	0.5
SBFRN-52	On Grade	Curb	PCO Curb Inlet w/ 2 Ext (3x5)	2.43	0	2.43	SBFRN-51	0.25	14	n/a	n/a	n/a	11.92	13.5	0.24	0.5
SBFRN-60	Sag	Curb	PCO Curb Inlet (3x5)	2.6	0	6.26		0.25	5	n/a	n/a	n/a	5.87	9.25	0.28	0.5

INLET COMPUTATIONS (10-YR)

ID	PROFILE TYPE	TYPE	LIBRARY ITEM DESCRIPTION	DISCHARGE	BYPASS FLOW	CAPACITY	BYPASS NODE ID	CURB DEPRESSION	CURB LENGTH	GRATE LENGTH	GRATE WIDTH	GRATE AREA	COMPUTED PONDED WIDTH	MAX PONDED WITDH	COMPUTED PONDED DEPTH	MAX PONDED DEPTH
DCH181-A1	Sag	Grate	PAZD FG 4x4-4	0.05	0	9.1		n/a	n/a	4	4	8.2	0	10	0.02	0.5
DCH181-A10	On Grade	Grate	PAZD FG 5x5-4	0.05	0	0.05		n/a	n/a	4	4	8.2	6.45	8	0.02	0.5
DCH181-A2	Sag	Grate	PAZD FG 4x4-4	0.07	0	9.1		n/a	n/a	4	4	8.2	0.68	7	0.02	0.5
DCH181-A3	Sag	Grate	PAZD FG 4x4-4	0.01	0	31.16		n/a	n/a	4	4	8.2	0	12	0.01	2
DCH181-A4	Sag	Grate	PAZD FG 4x4-4	0.05	0	31.16		n/a	n/a	4	4	8.2	0.74	12	0.02	2
DCH181-A5	On Grade	Grate	PAZD FG 5x5-4	0.1	0	0.1		n/a	n/a	4	4	8.2	3.08	10	0.06	0.5
DCH181-A6	On Grade	Grate	PAZD FG 5x5-4	0.1	0	0.1		n/a	n/a	4	4	8.2	0.8	10	0.2	0.5
DCH181-A7	Sag	Grate	PAZD FG 4x4-4	0.1	0	34.84		n/a	n/a	4	4	8.2	0.96	16	0.02	2.5
DCH181-A8	Sag	Grate	PAZD FG 4x4-4	0.05	0	25.12		n/a	n/a	4	4	8.2	0.79	8	0.02	1.3
DCH181-A9	On Grade	Grate	PAZD FG 4x4-4	0.05	0	0.05		n/a	n/a	4	4	8.2	0.39	8	0.1	0.5
DCH181-SD1	Sag	Slotted Drain	20' TYPE SD-T Slotted Drain	0.05	0	38.12		n/a	n/a	n/a	n/a	n/a	0	13.5	0.03	0.5

INLET COMPUTATIONS (10-YR)

ID	PROFILE TYPE	TYPE	LIBRARY ITEM DESCRIPTION	DISCHARGE	BYPASS FLOW	CAPACITY	BYPASS NODE ID	CURB DEPRESSION	CURB LENGTH	GRATE LENGTH	GRATE WIDTH	GRATE AREA	COMPUTED PONDED WIDTH	MAX PONDED WITDH	COMPUTED PONDED DEPTH	MAX PONDED DEPTH
BRPT-01	Sag	Curb	PCO Curb Inlet (3x5)	0.13	0	6.26		0.25	5	n/a	n/a	n/a	0.37	9.5	0.04	0.5
BRPT-02	On Grade	Curb	PCO Curb Inlet (3x5)	0.14	0	0.14	BRPT-01	0.25	5	n/a	n/a	n/a	8.37	9.5	0.03	0.5
BRPT-03	On Grade	Curb	PCO Curb Inlet w/ 1 Ext (Left) (3x5)	0.18	0	0.18	BRPT-02	0.25	9.5	n/a	n/a	n/a	8.38	9.5	0.03	0.5
BRPT-04	On Grade	Curb	PCO Curb Inlet w/ 1 Ext (Left) (3x5)	0.18	0	0.18	BRPT-03	0.25	9.5	n/a	n/a	n/a	8.4	9.5	0.03	0.5
BRPT-05	On Grade	Curb	PCO Curb Inlet w/ 1 Ext (Left) (3x5)	0.19	0	0.19	BRPT-04	0.25	9.5	n/a	n/a	n/a	8.46	9.5	0.03	0.5
BRPT-06	Sag	Curb and Grate	PCO Curb Inlet (3x5)	0.5	0	10.48		0.25	5	4.96	1.39	2.29	30.38	9.5	0.12	0.5
BRPT-07	On Grade	Curb	PCO Curb Inlet w/ 1 Ext (Left) (3x5)	0.17	0	0.17	BRPT-06	0.25	9.5	n/a	n/a	n/a	8.35	9.5	0.03	0.5

DESIGN IN PROGRESS (PACKAGE 1B)

INLET COMPUTATIONS (10-YR)

ID	PROFILE TYPE	TYPE	LIBRARY ITEM DESCRIPTION	DISCHARGE	BYPASS FLOW	CAPACITY	BYPASS NODE ID	CURB DEPRESSION	CURB LENGTH	GRATE LENGTH	GRATE WIDTH	GRATE AREA	COMPUTED PONDED WIDTH	MAX PONDED WITDH	COMPUTED PONDED DEPTH	MAX PONDED DEPTH
				CFS	CFS	CFS		FT	FT	FT	FT	SF	FT	FT	FT	FT
TANK-A1	On Grade	Grate	PAZD FG 4x4-4	0.1	0	0.1	TANK-A2	n/a	n/a	4	4	8.2	1.58	10	0.09	0.5
TANK-A2	Sag	Grate	PAZD FG 4x4-4	0.1	0	9.1		n/a	n/a	4	4	8.2	1.94	10	0.02	0.5
TANK-A3	On Grade	Grate	PAZD FG 4x4-4	0.1	0	0.1	TANK-A1	n/a	n/a	4	4	8.2	1.94	10	0.1	0.5
TANK-A5	Sag	Grate	PAZD FG 4x4-4	0.1	0	9.1		n/a	n/a	4	4	8.2	3.61	10	0.02	0.5

NO.	REVISIONS	BY	DATE

PRELIMINARY
FOR REVIEW ONLY
THESE DOCUMENTS ARE PRELIMINARY AND SUBJECT TO CHANGE. THEY ARE NOT INTENDED FOR CONSTRUCTION OR BIDDING. THEY WERE PREPARED BY, OR UNDER THE SUPERVISION OF:
Engineer: JACEK KWASNIEWSKI
P.E. No.: 95757
Date: 4/25/2017

RELEASE FOR CONSTRUCTION

US 181 HARBOR BRIDGE

HYDRAULIC DATA SHEET

FLATIRON/DRAGADOS LLC

Stantec
Engineered by Stantec Consulting Services Inc.
Texas Registered Engineering Firm F-6324

Texas Department of Transportation
© 2017

SHEET 3 OF 7

FED. RD. DIV. NO.	FEDERAL AID PROJECT NO.		SHEET NO.
6	HP X597(1)		DRN 003
STATE	STATE DIST. NO.	COUNTY	
TEXAS	CRP	NUECES	
CONT.	SECT	JOB	HIGHWAY NO.
0101	06	095	US181

PROJECT
US 181 HARBOR BRIDGE

REVIEW PHASE
☐ Detail Check ☐ Internal Review ☐ Design Review ☐ TxDOT
☐ Drawing ☐ Report ☐ Other:

Prepared By: Date:
☐ Drawing Checked Against Calculations ☐ Calculations Check Confirmed

Checked by: Date:
Back-Checked by: Date:
Corrected by: Date:
Verified by: Date:

Plotted: 4/25/2017 3:08:33 PM
Pen Table: HBR_Packlb_DRN.tbl
Design File: pw:\\stantec-sc-pw.bentley.com:stantec-sc-pw\Documents\01 Projects\HBR\Build Work\Design\08-Drainage\08.01-Sheets\08.01A-North Package\ALTERNATE-B\HBR_DRN_NORTH_HYD03.dgn

NOTE:
THESE TABLES CONTAIN HYDRAULIC DATA FOR DRAINAGE SYSTEMS IN PACKAGES 1A AND 1B. REFER TO CORRESPONDING PACKAGE FOR PLAN & PROFILE SHEETS.

LINK COMPUTATIONS (10-YR)

UPSTREAM NODE ID	DOWNSTREAM NODE ID	INVERT UPSTREAM ELEVATION	HGL UPSTREAM ELEVATION	INVERT DOWNSTREAM ELEVATION	HGL DOWNSTREAM ELEVATION	UNIFORM DEPTH	UNIFORM VELOCITY	ACTUAL VELOCITY UPSTREAM	ACTUAL VELOCITY DOWNSTREAM	LIBRARY ITEM	NO. OF BARRELS	LENGTH	SLOPE	FRICTION SLOPE	MANNING'S N VALUE	DISCHARGE	CAPACITY
		FT	FT	FT	FT	FT	FPS	FPS	FPS			FT	%	%		CFS	CFS
JCT-2	CULV-OUT1	-0.95	1.02	-1.00	1.01	0.88	5.53	2.47	2.43	6'S x 6'H RCB	1	15.30	0.327	0.003	0.012	29.25	399.63
BRPT-07	JCT-2	-0.70	1.07	-0.95	1.02	1.16	4.20	2.75	2.47	6'S x 6'H RCB	1	176.29	0.142	0.001	0.012	29.25	263.24
JCT-1	BRPT-07	-0.60	1.14	-0.70	1.07	1.04	4.64	2.79	2.74	6'S x 6'H RCB	1	50.44	0.198	0.002	0.012	29.08	311.26
CULV-01	JCT-1	0.00	1.48	-0.60	1.14	1.11	4.13	3.11	2.65	6'S x 6'H RCB	1	383.95	0.156	0.001	0.012	27.60	276.33
NBFRN-63	JCT-1	3.12	3.76	2.00	2.26	0.26	6.30	1.70	6.20	24" RCP	1	37.72	2.971	0.030	0.012	1.48	45.44
SBFRN-60	CULV-01	0.23	1.45	0.00	1.48	0.70	7.81	3.76	3.05	24" RCP	1	16.03	1.410	0.014	0.012	7.60	31.31
BRPT-06	NBFRN-63	4.95	5.36	3.12	3.27	0.15	4.83	1.07	4.81	24" RCP	1	51.49	3.553	0.035	0.012	0.50	49.69
NB-INT-19	SBFRN-60	1.00	2.00	0.23	0.89	0.66	4.83	2.71	4.80	30" RCP	1	144.00	0.537	0.005	0.012	5.00	35.04

LINK COMPUTATIONS (10-YR)

UPSTREAM NODE ID	DOWNSTREAM NODE ID	INVERT UPSTREAM ELEVATION	HGL UPSTREAM ELEVATION	INVERT DOWNSTREAM ELEVATION	HGL DOWNSTREAM ELEVATION	UNIFORM DEPTH	UNIFORM VELOCITY	ACTUAL VELOCITY UPSTREAM	ACTUAL VELOCITY DOWNSTREAM	LIBRARY ITEM	NO. OF BARRELS	LENGTH	SLOPE	FRICTION SLOPE	MANNING'S N VALUE	DISCHARGE	CAPACITY
		FT	FT	FT	FT	FT	FPS	FPS	FPS			FT	%	%		CFS	CFS
SBFRN-19	CULV-OUT2	-1.98	1.00	-2.00	1.00	0.63	6.06	1.27	1.27	6'S x 4'H RCB	1	3.50	0.572	0.006	0.012	22.78	317.73
DCH181-A5	SBFRN-19	-1.95	1.03	-1.98	1.00	1.24	2.76	1.14	1.14	6'S x 4'H RCB	1	49.24	0.061	0.001	0.012	20.46	103.73
DCH181-A6	DCH181-A5	0.00	1.28	-1.00	1.03	0.63	5.39	2.16	1.46	24" RCP	1	133.90	0.747	0.008	0.012	4.58	22.78
NB-US181-JCT2	DCH181-A5	-1.82	1.03	-1.95	1.03	0.87	2.75	0.84	0.80	6'S x 4'H RCB	1	139.62	0.092	0.001	0.012	14.30	127.77
SBFRN-JCT2	DCH181-A6	0.80	1.49	0.00	0.45	0.45	3.51	1.94	3.51	24" RCP	1	170.01	0.465	0.005	0.012	1.86	17.98
SBFRN-20	DCH181-A6	0.80	1.45	0.00	0.33	0.33	5.58	2.09	5.51	24" RCP	1	46.48	1.721	0.017	0.012	1.86	34.59
DCH181-A7	NB-US181-JCT2	-0.80	1.24	-1.50	1.03	0.90	6.29	2.76	2.76	24" RCP	1	98.29	0.712	0.007	0.012	8.65	22.25
BENBXR-JCT1	NB-US181-JCT2	-1.76	1.04	-1.82	1.03	0.40	2.34	0.34	0.33	6'S x 4'H RCB	1	40.64	0.150	0.001	0.012	5.65	162.56
SBFRN-21	SBFRN-JCT2	1.23	1.87	0.80	1.19	0.39	4.28	2.15	4.26	24" RCP	1	50.61	0.815	0.008	0.012	1.86	23.81
BENBXR-08	BENBXR-JCT1	0.50	1.02	-0.26	1.04	0.32	3.79	1.87	0.56	24" RCP	1	90.62	0.839	0.008	0.012	1.20	24.14
NBFRN-JCT2	BENBXR-JCT1	-1.72	1.04	-1.76	1.04	0.40	1.84	0.27	0.27	6'S x 4'H RCB	1	41.33	0.097	0.001	0.012	4.44	130.73
BENBXR-09	BENBXR-08	0.96	1.32	0.50	1.02	0.29	2.11	1.52	0.90	24" RCP	1	155.35	0.295	0.003	0.012	0.58	14.32
NBFRN-19	NBFRN-JCT2	0.09	1.04	-1.72	1.04	0.59	5.76	3.04	1.42	24" RCP	1	196.26	0.924	0.009	0.012	4.44	25.35
NBFRN-20	NBFRN-19	0.18	1.10	0.09	1.04	0.82	2.04	1.75	1.69	24" RCP	1	95.35	0.090	0.001	0.012	2.48	7.92
NBFRN-JCT10	NBFRN-20	0.22	1.12	0.18	1.10	0.53	1.84	0.88	0.86	24" RCP	1	37.84	0.106	0.001	0.012	1.22	8.57
DCH181-SD1	NBFRN-JCT10	0.25	1.65	0.22	1.12	0.53	1.84	0.52	0.88	24" RCP	1	30.25	0.099	0.001	0.012	1.22	8.30

LINK COMPUTATIONS (10-YR)

UPSTREAM NODE ID	DOWNSTREAM NODE ID	INVERT UPSTREAM ELEVATION	HGL UPSTREAM ELEVATION	INVERT DOWNSTREAM ELEVATION	HGL DOWNSTREAM ELEVATION	UNIFORM DEPTH	UNIFORM VELOCITY	ACTUAL VELOCITY UPSTREAM	ACTUAL VELOCITY DOWNSTREAM	LIBRARY ITEM	NO. OF BARRELS	LENGTH	SLOPE	FRICTION SLOPE	MANNING'S N VALUE	DISCHARGE	CAPACITY
		FT	FT	FT	FT	FT	FPS	FPS	FPS			FT	%	%		CFS	CFS
DCH181-A3	CULV-OUT3	-1.96	1.02	-2.00	1.00	1.49	3.56	1.78	1.76	6'S x 4'H RCB	1	46.56	0.092	0.001	0.012	31.75	127.71
SBFRN-MH2	DCH181-A3	1.00	1.80	0.00	0.53	0.53	3.72	2.14	3.72	24" RCP	1	231.74	0.432	0.004	0.012	2.49	17.32
NBFRN-JCT6	DCH181-A3	-1.82	1.04	-1.96	1.02	1.30	3.65	1.66	1.59	6'S x 4'H RCB	1	137.31	0.102	0.001	0.012	28.45	134.19
SBFRN-10	SBFRN-MH2	1.20	1.95	1.00	1.50	0.50	4.12	2.33	4.12	24" RCP	1	34.58	0.578	0.006	0.012	2.49	20.05
NBFRN-JCT1	NBFRN-JCT6	-1.76	2.07	-1.82	1.04	1.24	3.68	1.19	1.59	6'S x 4'H RCB	1	57.31	0.105	0.001	0.012	27.29	136.07
DCH181-A1	NBFRN-JCT6	-0.10	1.55	-1.00	1.04	0.27	4.71	0.42	0.37	24" RCP	1	56.78	1.585	0.016	0.012	1.16	33.19
NBFRN-09	NBFRN-JCT1	-1.66	2.12	-1.76	2.07	1.76	3.48	2.12	2.12	36" RCP	1	102.12	0.103	0.001	0.012	14.98	24.98
NB-INT-11	NBFRN-JCT1	-1.50	2.14	-1.76	2.07	0.71	8.53	2.00	2.00	30" RCP	1	16.60	1.567	0.016	0.012	9.80	59.83
NBFRN-MH1	NBFRN-JCT1	0.58	2.10	-0.76	2.07	0.51	4.01	0.98	0.80	24" RCP	1	256.57	0.522	0.005	0.012	2.51	19.05
NBFRN-10	NBFRN-09	-0.50	2.23	-1.16	2.12	1.09	6.69	2.80	2.80	30" RCP	1	105.42	0.624	0.006	0.012	13.76	37.77
NBFRN-05	NBFRN-MH1	1.00	2.13	0.58	2.10	0.51	3.90	1.33	0.95	24" RCP	1	82.72	0.508	0.005	0.012	2.43	18.79
DCH181-A2	NBFRN-MH1	1.55	2.10	0.58	2.10	0.07	2.10	0.10	0.03	24" RCP	1	55.41	1.750	0.017	0.012	0.07	34.88
NBFRN-11	NBFRN-10	-0.36	2.43	-0.50	2.23	1.54	3.88	2.51	2.51	30" RCP	1	86.95	0.161	0.002	0.012	12.29	19.17
NB-INT-18	NBFRN-11	0.78	2.49	-0.36	2.43	0.51	13.70	2.73	2.00	30" RCP	1	19.09	5.941	0.059	0.012	9.80	116.51

LINK COMPUTATIONS (10-YR)

UPSTREAM NODE ID	DOWNSTREAM NODE ID	INVERT UPSTREAM ELEVATION	HGL UPSTREAM ELEVATION	INVERT DOWNSTREAM ELEVATION	HGL DOWNSTREAM ELEVATION	UNIFORM DEPTH	UNIFORM VELOCITY	ACTUAL VELOCITY UPSTREAM	ACTUAL VELOCITY DOWNSTREAM	LIBRARY ITEM	NO. OF BARRELS	LENGTH	SLOPE	FRICTION SLOPE	MANNING'S N VALUE	DISCHARGE	CAPACITY
		FT	FT	FT	FT	FT	FPS	FPS	FPS			FT	%	%		CFS	CFS
NBFRN-JCT3	CULV-OUT4	-1.71	2.66	-2.00	1.00	1.24	3.70	1.15	1.53	6'S x 4'H RCB	1	292.51	0.098	0.001	0.012	27.50	131.42
NB-INT-16	NBFRN-JCT3	0.92	2.66	0.30	2.66	0.22	4.94	0.31	0.29	24" RCP	1	27.48	2.257	0.023	0.012	0.90	39.60
NBFRN-MH4	NBFRN-JCT3	-1.61	2.68	-1.70	2.66	1.12	4.05	1.75	1.75	30" RCP	2	40.40	0.223	0.002	0.012	17.20	45.12
NBFRN-MH10	NBFRN-JCT3	-1.67	2.68	-1.70	2.66	1.47	3.14	1.92	1.92	30" RCP	1	31.69	0.106	0.001	0.012	9.40	15.59
NB-INT-17	NBFRN-MH4	1.63	2.68	0.71	2.68	0.18	5.82	0.48	0.26	24" RCP	2	23.04	4.000	0.040	0.012	1.60	105.45
NBFRN-MH9	NBFRN-MH4	-1.16	3.54	-1.61	2.68	1.91	3.88	3.18	3.18	30" RCP	1	313.31	0.144	0.001	0.012	15.60	18.12
NBFRN-MH11	NBFRN-MH10	-1.38	2.83	-1.67	2.68	1.47	3.14	1.92	1.92	30" RCP	1	280.32	0.101	0.001	0.012	9.40	15.22
NB-INT-09	NBFRN-MH9	-0.80	3.74	-1.16	3.54	0.69	10.80	3.31	3.31	24" RCP	1	13.20	2.728	0.027	0.012	10.40	43.55
NBFRN-MH8	NBFRN-MH9	-1.00	3.57	-1.16	3.54	0.72	4.49	1.06	1.06	30" RCP	1	37.80	0.423	0.004	0.012	5.20	31.10
NB-INT-08	NBFRN-MH11	1.35	2.84	0.76	2.83	0.20	6.22	0.40	0.32	24" RCP	1	14.65	4.000	0.040	0.012	1.00	52.73
NBFRN-MH12	NBFRN-MH11	-1.34	2.87	-1.38	2.83	1.32	3.20	1.71	1.71	30" RCP	1	37.77	0.111	0.001	0.012	8.40	15.90
NB-INT-10	NBFRN-MH8	-0.62	3.62	-1.00	3.57	0.50	8.52	1.66	1.66	24" RCP	1	15.53	2.447	0.024	0.012	5.20	41.24
NB-INT-07	NBFRN-MH12	1.61	2.87	0.99	2.87	0.20	6.22	0.48	0.33	24" RCP	1	15.54	4.000	0.040	0.012	1.00	52.73
NBFRN-MH13	NBFRN-MH12	-1.02	3.08	-1.34	2.87	1.32	2.81	1.51	1.51	30" RCP	1	311.75	0.101	0.001	0.012	7.40	15.21
NB-INT-15	NBFRN-MH13	0.84	3.08	-0.12	3.08	0.21	6.40	0.35	0.35	24" RCP	1	23.99	4.000	0.040	0.012	1.10	52.73
NBFRN-MH14	NBFRN-MH13	-0.99	3.14	-1.02	3.08	1.14	2.90	1.28	1.28	30" RCP	1	34.23	0.112	0.001	0.012	6.30	15.97
NB-INT-14	NBFRN-MH14	1.09	3.15	0.07	3.14	0.26	7.41	0.57	0.57	24" RCP	1	25.48	4.000	0.040	0.012	1.80	52.73
NBFRN-MH15	NBFRN-MH14	-0.66	3.19	-0.99	3.14	0.95	2.62	0.92	0.92	30" RCP	1	318.85	0.101	0.001	0.012	4.50	15.21
NB-INT-13	NBFRN-MH15	1.29	3.19	0.08	3.19	0.23	6.87	0.45	0.45	24" RCP	1	30.28	4.000	0.040	0.012	1.40	52.73
NBFRN-MH16	NBFRN-MH15	-0.63	3.20	-0.66	3.19	0.77	2.41	0.63	0.63	30" RCP	1	33.90	0.112	0.001	0.012	3.10	15.98
NB-INT-12	NBFRN-MH16	0.97	3.22	-0.36	3.20	0.34	8.72	0.99	0.99	24" RCP	1	33.17	4.000	0.040	0.012	3.10	52.73

NO.	REVISIONS	BY	DATE

PRELIMINARY
FOR REVIEW ONLY
THESE DOCUMENTS ARE PRELIMINARY AND SUBJECT TO CHANGE. THEY ARE NOT INTENDED FOR CONSTRUCTION OR BIDDING. THEY WERE PREPARED BY, OR UNDER THE SUPERVISION OF:
Engineer: JACEK KWASNIEWSKI
P.E. No.: 95757
Date: 4/25/2017

RELEASE FOR CONSTRUCTION

US 181 HARBOR BRIDGE

HYDRAULIC DATA SHEET

FLATIRON/DRAGADOS LLC

Stantec
Engineered by Stantec Consulting Services Inc.
Texas Registered Engineering Firm F-6324

Texas Department of Transportation
© 2017

SHEET 4 OF 7

FED. RD. DIV. NO.	FEDERAL AID PROJECT NO.		SHEET NO.
6	HP X597(1)		DRN 004
STATE	STATE DIST. NO.	COUNTY	
TEXAS	CRP	NUECES	
CONT.	SECT	JOB	HIGHWAY NO.
0101	06	095	US181

PROJECT
US 181 HARBOR BRIDGE

Checked by: Date:
Back-Checked by: Date:
Corrected by: Date:
Verified by: Date:

☐ Detail Check ☐ Internal Review ☐ Design Review ☐ TxDOT
☐ Drawing ☐ Report ☐ Other: _____
Prepared By: Date:
☐ Drawing Checked Against Calculations ☐ Calculations Check Confirmed
REVIEW PHASE

Plotted: 4/25/2017 3:08:36 PM
Pen Table: HBR_Pack1B_DRN.tbl
Design File: pw:\\stantec-sc-pw.bentley.com:stantec-sc-pw\Documents\01 Projects\HBR\Build Work\Design\08-Drainage\08.01-Sheets\08.01A-North Package\ALTERNATE-B\HBR_DRN_NORTH_HYD04.dgn

LINK COMPUTATIONS (10-YR)

UPSTREAM NODE ID	DOWNSTREAM NODE ID	INVERT UPSTREAM ELEVATION	HGL UPSTREAM ELEVATION	INVERT DOWNSTREAM ELEVATION	HGL DOWNSTREAM ELEVATION	UNIFORM DEPTH	UNIFORM VELOCITY	ACTUAL VELOCITY UPSTREAM	ACTUAL VELOCITY DOWNSTREAM	LIBRARY ITEM	NO. OF BARRELS	LENGTH	SLOPE	FRICTION SLOPE	MANNING'S N VALUE	DISCHARGE	CAPACITY
		FT	FT	FT	FT	FT	FPS	FPS	FPS			FT	%	%		CFS	CFS
SBFRN-JCT5	CULV-OUT5	-1.95	1.11	-2.00	1.00	1.11	3.05	1.11	1.13	6'S x 4'H RCB	1	68.44	0.073	0.001	0.012	20.35	113.58
DCH181-A4	SBFRN-JCT5	-0.10	1.60	-0.50	0.65	1.15	6.13	4.02	6.13	24" RCP	1	72.48	0.552	0.006	0.012	11.48	19.59
BENBXR-JCT2	SBFRN-JCT5	0.22	1.15	-1.95	1.11	0.22	4.93	1.15	0.35	6'S x 4'H RCB	1	163.23	1.329	0.013	0.012	6.40	484.45
SB-US181-MH1	SBFRN-JCT5	2.00	2.80	-0.50	-0.10	0.40	5.52	2.11	5.52	24" RCP	1	189.67	1.318	0.013	0.012	2.47	30.27
SBFRN-22	DCH181-A4	0.40	1.62	-0.10	1.60	0.38	4.31	0.90	0.63	24" RCP	1	58.15	0.860	0.009	0.012	1.80	24.45
BENBXR-12	BENBXR-JCT2	0.11	1.16	-0.50	1.15	0.46	3.79	1.23	0.73	24" RCP	1	112.73	0.541	0.005	0.012	2.04	19.38
BENBXR-13	BENBXR-JCT2	1.00	1.67	-0.50	-0.11	0.39	6.60	3.10	6.56	24" RCP	1	77.18	1.944	0.019	0.012	2.87	36.75
BENBXR-JCT3	BENBXR-JCT2	-1.76	1.15	-1.78	1.15	0.19	1.29	0.09	0.09	6'S x 4'H RCB	1	22.32	0.103	0.001	0.012	1.50	134.89
SBFRN-23	SB-US181-MH1	3.40	4.16	2.00	2.35	0.35	6.65	2.25	6.59	24" RCP	1	62.39	2.244	0.022	0.012	2.47	39.49
BENBXR-11	BENBXR-12	0.19	1.16	0.11	1.16	0.56	1.78	0.84	0.77	24" RCP	1	78.02	0.100	0.001	0.012	1.28	8.34
NB-US181-15	BENBXR-13	1.50	2.13	1.00	1.42	0.42	3.74	2.12	3.74	24" RCP	1	87.72	0.570	0.006	0.012	1.80	19.90
NBFRN-JCT4	BENBXR-JCT3	-1.73	1.15	-1.76	1.15	0.20	1.24	0.09	0.09	6'S x 4'H RCB	1	31.07	0.099	0.001	0.012	1.50	131.94
BENBXR-10	BENBXR-11	0.56	1.17	0.19	1.16	0.35	2.64	1.20	0.65	24" RCP	1	104.03	0.357	0.004	0.012	0.98	15.74
NBFRN-21	NBFRN-JCT4	0.17	1.18	-0.50	1.15	0.48	2.55	0.94	0.54	24" RCP	1	286.17	0.233	0.002	0.012	1.50	12.74
BENBXR-10A	BENBXR-10	0.66	1.19	0.56	1.17	0.28	2.23	0.90	0.73	24" RCP	1	30.21	0.331	0.003	0.012	0.59	15.17

LINK COMPUTATIONS (10-YR)

UPSTREAM NODE ID	DOWNSTREAM NODE ID	INVERT UPSTREAM ELEVATION	HGL UPSTREAM ELEVATION	INVERT DOWNSTREAM ELEVATION	HGL DOWNSTREAM ELEVATION	UNIFORM DEPTH	UNIFORM VELOCITY	ACTUAL VELOCITY UPSTREAM	ACTUAL VELOCITY DOWNSTREAM	LIBRARY ITEM	NO. OF BARRELS	LENGTH	SLOPE	FRICTION SLOPE	MANNING'S N VALUE	DISCHARGE	CAPACITY
		FT	FT	FT	FT	FT	FPS	FPS	FPS			FT	%	%		CFS	CFS
NBFRN-MH17	CULV-OUT6	-1.82	1.71	-2.00	1.00	2.48	4.54	3.19	3.75	6'S x 4'H RCB	1	180.28	0.098	0.001	0.012	67.46	131.67
NB-INT-02	NBFRN-MH17	2.81	3.92	1.59	2.06	0.43	10.04	2.79	9.01	24" RCP	1	30.45	4.000	0.040	0.012	5.00	52.73
NBFRN-MH21	NBFRN-MH17	-1.71	1.82	-1.82	1.71	1.98	4.42	2.47	2.48	6'S x 4'H RCB	1	107.00	0.104	0.001	0.012	52.46	135.35
NBFRN-MH22	NBFRN-MH17	-0.51	1.71	-1.82	1.71	0.42	3.99	0.75	0.47	6'S x 4'H RCB	1	327.95	0.400	0.004	0.012	10.00	265.90
NBFRN-61	NBFRN-MH21	0.96	1.82	0.29	1.82	0.31	7.19	1.70	0.85	24" RCP	1	21.59	3.094	0.031	0.012	2.19	46.38
NBFRN-MH20	NBFRN-MH21	-1.54	2.14	-1.71	1.82	1.98	4.23	2.28	2.37	6'S x 4'H RCB	1	173.44	0.101	0.001	0.012	50.27	133.77
NBFRN-MH23	NBFRN-MH22	-0.41	1.71	-0.51	1.71	0.62	2.69	0.79	0.75	6'S x 4'H RCB	1	90.50	0.113	0.001	0.012	10.00	141.17
NB-INT-03	NBFRN-MH20	-1.05	2.65	-1.54	2.14	1.17	11.05	5.09	5.09	30" RCP	1	31.05	1.578	0.016	0.012	25.00	60.05
NBFRN-MH19	NBFRN-MH20	-1.39	2.24	-1.54	2.14	0.93	4.54	1.16	1.15	6'S x 4'H RCB	1	71.10	0.213	0.002	0.012	25.27	194.13
NB-INT-01	NBFRN-MH23	-0.20	1.77	-0.41	1.71	0.71	4.99	1.60	1.59	24" RCP	1	35.76	0.573	0.006	0.012	5.00	19.96
NBFRN-MH24	NBFRN-MH23	-0.15	1.71	-0.41	1.71	0.40	2.07	0.45	0.39	6'S x 4'H RCB	1	242.00	0.107	0.001	0.012	5.00	137.52
NBFRN-MH18	NBFRN-MH19	-1.29	2.95	-1.39	2.24	2.05	5.86	5.15	5.15	30" RCP	1	31.15	0.315	0.003	0.012	25.27	26.84
POND-05	NBFRN-MH24	1.00	1.72	-0.15	1.71	0.22	3.85	1.15	0.45	6'S x 4'H RCB	1	140.28	0.817	0.008	0.012	5.00	379.83
NB-INT-04	NBFRN-MH18	-1.00	3.28	-1.29	2.95	1.91	3.15	2.57	2.57	30" RCP	2	282.26	0.103	0.001	0.012	25.27	30.64

LINK COMPUTATIONS (10-YR)

UPSTREAM NODE ID	DOWNSTREAM NODE ID	INVERT UPSTREAM ELEVATION	HGL UPSTREAM ELEVATION	INVERT DOWNSTREAM ELEVATION	HGL DOWNSTREAM ELEVATION	UNIFORM DEPTH	UNIFORM VELOCITY	ACTUAL VELOCITY UPSTREAM	ACTUAL VELOCITY DOWNSTREAM	LIBRARY ITEM	NO. OF BARRELS	LENGTH	SLOPE	FRICTION SLOPE	MANNING'S N VALUE	DISCHARGE	CAPACITY
		FT	FT	FT	FT	FT	FPS	FPS	FPS			FT	%	%		CFS	CFS
SBFRN-JCT8	SBFRN-OUT5	-1.95	1.07	-2.00	1.00	0.99	10.14	3.33	3.35	6'S x 4'H RCB	1	5.07	0.986	0.010	0.012	60.25	417.27
SBFRN-JCT4	SBFRN-JCT8	-1.75	1.14	-1.95	1.07	1.32	7.11	3.24	3.10	6'S x 4'H RCB	1	53.68	0.373	0.004	0.012	56.12	256.50
SBFRN-30	SBFRN-JCT8	0.84	1.80	-0.50	-0.03	0.44	9.83	3.41	9.04	24" RCP	1	35.98	3.724	0.037	0.012	5.09	50.88
DCH181-A10	SBFRN-JCT4	1.82	3.03	-0.30	0.38	0.68	6.71	3.13	6.69	24" RCP	1	196.70	1.078	0.011	0.012	6.25	27.37
SBFRN-JCT7	SBFRN-JCT4	-1.45	1.24	-1.75	1.14	1.24	6.87	3.17	2.95	6'S x 4'H RCB	1	83.83	0.358	0.004	0.012	51.00	251.39
SBFRN-31	SBFRN-30	1.20	1.85	0.84	1.80	0.41	3.04	1.58	0.93	24" RCP	1	92.48	0.389	0.004	0.012	1.39	16.45
SBFRN-MH10	DCH181-A10	2.50	3.93	1.82	2.53	0.70	5.87	2.40	5.85	24" RCP	1	85.86	0.792	0.008	0.012	5.79	23.46
P21-END	SBFRN-JCT7	-1.00	1.30	-1.45	1.24	0.73	3.83	1.27	1.27	24" RCP	1	135.07	0.333	0.003	0.012	4.00	15.22
P22-END	SBFRN-JCT7	-1.00	1.29	-1.45	1.24	0.70	4.11	1.27	1.27	24" RCP	1	113.24	0.397	0.004	0.012	4.00	16.62
NBFRN-JCT8	SBFRN-JCT7	-1.20	1.43	-1.45	1.24	1.24	5.81	2.74	2.68	6'S x 4'H RCB	1	94.02	0.266	0.003	0.012	43.11	216.69
SBFRN-MH9	SBFRN-MH10	3.50	4.51	2.50	3.11	0.61	5.34	2.72	5.31	24" RCP	1	131.79	0.759	0.008	0.012	4.32	22.96
SB-US181-20	SBFRN-MH10	4.00	4.77	2.50	2.71	0.20	8.86	1.33	8.42	24" RCP	1	19.03	7.883	0.079	0.012	1.48	74.02
NBFRN-JCT5	NBFRN-JCT8	-1.02	1.47	-1.20	1.43	0.87	7.36	2.55	2.43	6'S x 4'H RCB	1	30.01	0.600	0.006	0.012	38.23	325.45
NB-US181-MH1	NBFRN-JCT8	-0.75	1.70	-1.20	1.43	1.23	3.20	2.07	2.07	24" RCP	1	304.38	0.148	0.001	0.012	6.50	10.14
SBFRN-MH13	SBFRN-MH9	4.50	5.38	3.50	4.00	0.50	4.89	2.25	4.88	24" RCP	1	124.76	0.802	0.008	0.012	2.99	23.60
SB-US181-19	SBFRN-MH9	4.20	4.81	3.50	3.74	0.23	6.71	1.64	6.37	24" RCP	1	17.91	3.909	0.039	0.012	1.32	52.12
NBFRN-31	NBFRN-JCT5	-0.18	1.71	-1.02	1.47	1.03	3.18	1.68	1.64	24" RCP	1	525.50	0.159	0.002	0.012	5.16	10.52
NBFRN-JCT7	NBFRN-JCT5	-1.00	1.59	-1.02	1.47	0.90	6.14	2.13	2.21	6'S x 4'H RCB	1	4.90	0.408	0.004	0.012	33.07	268.37
NB-US181-18	NB-US181-MH1	0.50	1.70	-0.75	1.70	0.25	6.67	0.77	0.48	24" RCP	1	36.62	3.413	0.034	0.012	1.52	48.71
NB-US181-MH2	NB-US181-MH1	-0.60	1.81	-0.75	1.70	1.29	2.50	1.70	1.70	24" RCP	1	169.52	0.088	0.001	0.012	5.35	7.84
SB-US181-18	SBFRN-MH13	6.00	7.15	4.50	4.79	0.26	12.62	1.61	10.67	24" RCP	1	12.69	11.821	0.118	0.012	2.99	90.64
NBFRN-30	NBFRN-31	-0.11	1.73	-0.18	1.71	0.88	2.36	1.04	1.02	24" RCP	1	75.00	0.101	0.001	0.012	3.14	8.37
NBFRN-40	NBFRN-JCT7	0.80	1.59	0.50	1.59	0.55	4.37	2.66	1.76	24" RCP	1	52.63	0.570	0.006	0.012	3.07	19.90
DCH181-A8	NB-US181-MH2	-0.45	1.90	-0.60	1.81	0.87	3.29	1.36	1.36	24" RCP	1	73.81	0.203	0.002	0.012	4.28	11.88
NB-US181-17	NB-US181-MH2	0.50	1.81	-0.60	1.81	0.23	6.05	0.57	0.39	24" RCP	1	35.76	3.076	0.031	0.012	1.24	46.23
SB-US181-17	SB-US181-18	8.00	8.67	6.00	6.32	0.32	5.26	1.86	5.26	24" RCP	1	127.97	1.563	0.016	0.012	1.73	32.96
NBFRN-29	NBFRN-30	0.20	1.74	-0.11	1.73	0.52	3.43	0.86	0.74	24" RCP	1	80.00	0.383	0.004	0.012	2.23	16.31
NBFRN-41	NBFRN-40	1.00	1.65	0.80	1.59	0.40	3.69	1.91	1.45	24" RCP	1	33.78	0.592	0.006	0.012	1.67	20.29
NB-US181-MH3	DCH181-A8	0.00	1.92	-0.45	1.90	0.55	3.02	0.69	0.68	24" RCP	1	163.80	0.275	0.003	0.012	2.12	13.82
DCH181-A9	SB-US181-17	10.85	11.61	8.00	8.06	0.06	7.77	0.18	7.77	24" RCP	1	8.97	31.784	0.318	0.012	0.20	148.63
NB-US181-16	NB-US181-MH3	0.50	1.93	0.00	1.92	0.36	5.52	0.88	0.69	24" RCP	1	33.30	1.501	0.015	0.012	2.12	32.30

NOTE:
THESE TABLES CONTAIN HYDRAULIC DATA FOR DRAINAGE SYSTEMS IN PACKAGES 1A AND 1B. REFER TO CORRESPONDING PACKAGE FOR PLAN & PROFILE SHEETS.

NO.	REVISIONS	BY	DATE

PRELIMINARY
FOR REVIEW ONLY
THESE DOCUMENTS ARE PRELIMINARY AND SUBJECT TO CHANGE. THEY ARE NOT INTENDED FOR CONSTRUCTION OR BIDDING. THEY WERE PREPARED BY, OR UNDER THE SUPERVISION OF:
Engineer: JACEK KWASNIEWSKI
P.E. No.: 95757
Date: 4/25/2017

RELEASE FOR CONSTRUCTION

US 181 HARBOR BRIDGE

HYDRAULIC DATA SHEET

FLATIRON/DRAGADOS LLC

Stantec
Engineered by Stantec Consulting Services Inc.
Texas Registered Engineering Firm F-6324

Texas Department of Transportation
© 2017
SHEET 5 OF 7

FED. RD. DIV. NO.	FEDERAL AID PROJECT NO.		SHEET NO.
6	HP X597(1)		DRN 005
STATE	STATE DIST. NO.	COUNTY	
TEXAS	CRP	NUECES	
CONT.	SECT	JOB	HIGHWAY NO.
0101	06	095	US181

PROJECT
US 181 HARBOR BRIDGE

Checked by: Date:
Back-Checked by: Date:
Corrected by: Date:
Verified by: Date:
☐ TxDOT
☐ Internal Review ☐ Design Review
☐ Other: ____
☐ Detail Check
☐ Drawing ☐ Report
Prepared By: Date:
☐ Calculations Check Confirmed
☐ Drawing Checked Against Calculations
REVIEW PHASE

Plotted: 4/25/2017 3:08:40 PM
Pen Table: HBR_Packt8_DRN.tbl
Design File: pw:\\stantec-sc-pw.bentley.com:stantec-sc-pw\Documents\01 Projects\HBR\Build Work\Design\08-Drainage\08.01-Sheets\08.01A-North Package\ALTERNATE-B\HBR_DRN_NORTH_HY005.dgn

NOTE:
THESE TABLES CONTAIN HYDRAULIC DATA FOR DRAINAGE SYSTEMS IN PACKAGES 1A AND 1B. REFER TO CORRESPONDING PACKAGE FOR PLAN & PROFILE SHEETS.

LINK COMPUTATIONS (10-YR)

UPSTREAM NODE ID	DOWNSTREAM NODE ID	INVERT UPSTREAM ELEVATION	HGL UPSTREAM ELEVATION	INVERT DOWNSTREAM ELEVATION	HGL DOWNSTREAM ELEVATION	UNIFORM DEPTH	UNIFORM VELOCITY	ACTUAL VELOCITY UPSTREAM	ACTUAL VELOCITY DOWNSTREAM	LIBRARY ITEM	NO. OF BARRELS	LENGTH	SLOPE	FRICTION SLOPE	MANNING'S N VALUE	DISCHARGE	CAPACITY
		FT	FT	FT	FT	FT	FPS	FPS	FPS			FT	%	%		CFS	CFS
SBFRN-51	SBFRN-OUT2	1.75	2.48	1.00	1.40	0.40	5.33	2.30	5.29	24" RCP	1	60.75	1.231	0.012	0.012	2.40	29.25
SBFRN-50	SBFRN-OUT3	1.15	1.79	1.00	1.46	0.53	2.72	2.07	3.25	24" RCP	1	60.86	0.241	0.002	0.012	1.80	12.95
SBFRN-40	SBFRN-OUT4	0.62	1.51	0.00	0.53	0.53	5.23	2.58	5.20	24" RCP	1	72.77	0.850	0.009	0.012	3.50	24.30
NBFRN-62	NBFRN-OUT1	1.65	2.08	1.00	1.22	0.22	4.57	1.70	4.55	24" RCP	1	33.73	1.939	0.019	0.012	0.84	36.71
NBFRN-60	NBFRN-OUT3	1.20	1.95	1.00	1.56	0.57	3.42	2.34	3.57	24" RCP	1	57.92	0.340	0.003	0.012	2.54	15.37
NBFRN-50	NBFRN-OUT4	0.74	1.73	0.00	0.58	0.57	5.59	2.69	5.57	24" RCP	1	82.69	0.896	0.009	0.012	4.17	24.95
NB-INT-20	NBFRN-OUT5	-0.70	1.03	-1.00	1.00	0.66	4.83	1.38	1.19	30" RCP	1	54.92	0.546	0.005	0.012	5.00	35.33
POND-01	POND-OUT1	-1.00	1.06	-2.00	1.00	0.59	8.45	2.43	1.67	6'S x 6'H RCB	1	83.83	1.193	0.012	0.012	30.00	763.47
POND-02	POND-OUT2	-1.00	1.06	-2.00	1.00	0.60	8.33	2.43	1.67	6'S x 6'H RCB	1	87.98	1.137	0.011	0.012	30.00	745.23
POND-04	POND-OUT4	-1.00	1.01	-2.00	1.00	0.30	5.49	0.83	0.56	6'S x 4'H RCB	1	90.55	1.104	0.011	0.012	10.00	441.63

LINK COMPUTATIONS (10-YR)

UPSTREAM NODE ID	DOWNSTREAM NODE ID	INVERT UPSTREAM ELEVATION	HGL UPSTREAM ELEVATION	INVERT DOWNSTREAM ELEVATION	HGL DOWNSTREAM ELEVATION	UNIFORM DEPTH	UNIFORM VELOCITY	ACTUAL VELOCITY UPSTREAM	ACTUAL VELOCITY DOWNSTREAM	LIBRARY ITEM	NO. OF BARRELS	LENGTH	SLOPE	FRICTION SLOPE	MANNING'S N VALUE	DISCHARGE	CAPACITY
		FT	FT	FT	FT	FT	FPS	FPS	FPS			FT	%	%		CFS	CFS
BURL-MH1	BURL-OUT1	-1.85	1.06	-2.00	1.00	2.10	4.54	3.28	3.18	6'S x 4'H RCB	1	150.44	0.100	0.001	0.012	57.29	132.89
BURL-MH6	BURL-MH1	-1.64	2.87	-1.85	1.06	2.10	4.54	2.39	3.28	6'S x 4'H RCB	1	214.64	0.100	0.001	0.012	57.29	132.89
BURL-MH8	BURL-MH6	0.00	3.73	-1.64	2.87	0.84	11.94	2.72	2.72	36" RCP	1	66.86	2.450	0.025	0.012	19.22	121.66
BURL-MH10	BURL-MH6	-1.20	3.25	-1.64	2.87	1.28	6.93	2.81	2.81	36" RCP	1	81.87	0.535	0.005	0.012	19.85	56.85
BURL-EB-02	BURL-MH6	-1.43	2.91	-1.64	2.87	1.32	3.04	1.29	1.29	36" RCP	2	202.78	0.101	0.001	0.012	18.22	49.43
NB-INT-05	BURL-MH8	0.50	4.28	0.00	3.73	1.72	5.08	3.73	3.73	30" RCP	1	196.34	0.255	0.003	0.012	18.32	24.12
BURL-INT-04	BURL-MH8	0.12	3.73	0.00	3.73	0.31	2.93	0.29	0.29	24" RCP	1	23.26	0.516	0.005	0.012	0.90	18.93
BURL-MH4	BURL-MH10	-1.10	3.36	-1.20	3.25	1.23	4.04	1.56	1.56	36" RCP	1	56.46	0.177	0.002	0.012	11.05	32.71
NB-INT-06	BURL-MH10	1.00	3.29	-1.20	3.25	0.56	5.43	0.93	0.90	30" RCP	1	260.59	0.844	0.008	0.012	4.40	43.92
BURL-MH2	BURL-EB-02	-0.33	2.99	-1.43	2.91	0.59	9.05	1.62	1.62	30" RCP	2	50.53	2.181	0.022	0.012	15.88	141.18
BURL-MH3	BURL-MH4	-0.90	3.91	-1.10	3.36	0.92	3.58	0.94	0.94	36" RCP	1	106.02	0.189	0.002	0.012	6.63	33.76
BURL-INT-03	BURL-MH4	0.00	3.40	-0.10	3.36	0.68	4.67	1.41	1.41	24" RCP	1	19.63	0.509	0.005	0.012	4.42	18.82
BURL-INT-01	BURL-MH2	0.00	3.27	-0.33	2.99	1.36	5.84	3.24	3.24	30" RCP	1	85.76	0.386	0.004	0.012	15.88	29.70
BURL-WB-02	BURL-MH3	-0.70	3.91	-0.90	3.91	0.47	3.98	0.52	0.52	30" RCP	1	36.07	0.563	0.006	0.012	2.53	35.86
BURL-INT-02	BURL-MH3	-0.80	3.94	-0.90	3.91	0.57	5.53	1.31	1.31	24" RCP	1	11.43	0.875	0.009	0.012	4.10	24.66
BURL-WB-03	BURL-OUT2	0.04	1.03	0.00	1.00	0.59	2.06	1.02	1.01	24" RCP	1	35.83	0.111	0.001	0.012	1.59	8.77
BURL-EB-03	BURL-WB-03	0.13	1.04	0.04	1.03	0.36	2.34	0.65	0.59	24" RCP	1	32.00	0.268	0.003	0.012	0.91	13.66

LINK COMPUTATIONS (10-YR)

UPSTREAM NODE ID	DOWNSTREAM NODE ID	INVERT UPSTREAM ELEVATION	HGL UPSTREAM ELEVATION	INVERT DOWNSTREAM ELEVATION	HGL DOWNSTREAM ELEVATION	UNIFORM DEPTH	UNIFORM VELOCITY	ACTUAL VELOCITY UPSTREAM	ACTUAL VELOCITY DOWNSTREAM	LIBRARY ITEM	NO. OF BARRELS	LENGTH	SLOPE	FRICTION SLOPE	MANNING'S N VALUE	DISCHARGE	CAPACITY
		FT	FT	FT	FT	FT	FPS	FPS	FPS			FT	%	%		CFS	CFS
BRPT-04	BRPT-OUT1	-0.90	1.50	-1.00	1.00	0.46	1.78	0.23	0.26	30" RCP	1	83.36	0.118	0.001	0.012	1.10	16.40
BRPT-03	BRPT-04	-0.36	1.51	-0.90	1.50	0.19	4.03	0.20	0.19	24" RCP	1	29.95	1.797	0.018	0.012	0.60	35.34
BRPT-05	BRPT-04	0.55	1.50	-0.90	1.50	0.10	4.08	0.17	0.08	24" RCP	1	36.39	4.000	0.040	0.012	0.25	52.73
BRPT-02	BRPT-03	-0.34	1.51	-0.36	1.51	0.29	1.25	0.12	0.12	24" RCP	1	27.01	0.100	0.001	0.012	0.36	8.34
BRPT-01	BRPT-02	-0.33	1.51	-0.34	1.51	0.21	1.01	0.06	0.06	24" RCP	1	7.01	0.100	0.001	0.012	0.17	8.34

CULV-OUT3 SYSTEM - DITCH ANALYSIS (10 YR)

DITCH ID	POINT OF ANALYSIS: NODE STATION UPSTREAM	POINT OF ANALYSIS: NODE STATION DOWNSTREAM	SLOPE	NODE INVERT UPSTREAM	NODE INVERT DOWNSTREAM	ACTUAL DETPH UPSTREAM	ACTUAL DETPH DOWNSTREAM	ACTUAL VELOCITY UPSTREAM	ACTUAL VELOCITY DOWNSTREAM	MANNING'S N VALUE	DISCHARGE	CAPACITY
			%	FT	FT	FT	FT	FT/S	FT/S		CFS	CFS
DCH181NR0	1020+70.38	1020+36.20	0.217	3.93	3.86	0.39	0.23	0.73	2.08	0.033	0.45	15.29
DCH181NR0	1019+99.16	1020+36.20	0.228	3.94	3.86	0.36	0.21	0.67	1.97	0.033	0.35	15.67
DCH181NL0	1021+54.32	1021+02.82	0.220	3.51	3.40	0.54	0.33	0.88	2.32	0.033	1.02	15.38
DCH181NL0	1020+59.09	1021+02.82	1.757	4.13	3.40	0.19	0.09	0.62	2.55	0.033	0.09	43.46

CULV-OUT2 SYSTEM - DITCH ANALYSIS (10 YR)

DITCH ID	POINT OF ANALYSIS: NODE STATION UPSTREAM	POINT OF ANALYSIS: NODE STATION DOWNSTREAM	SLOPE	NODE INVERT UPSTREAM	NODE INVERT DOWNSTREAM	ACTUAL DETPH UPSTREAM	ACTUAL DETPH DOWNSTREAM	ACTUAL VELOCITY UPSTREAM	ACTUAL VELOCITY DOWNSTREAM	MANNING'S N VALUE	DISCHARGE	CAPACITY
			%	FT	FT	FT	FT	FT/S	FT/S		CFS	CFS
DCH181NR1	1027+35.08	1027+58.26	1.642	5.73	5.39	0.49	0.32	1.53	3.63	0.015	1.48	199.03
DCH181NR1	1027+99.28	1028+98.95	0.133	4.98	4.85	0.52	0.30	0.69	2.16	0.033	0.75	25.76
DCH181NL1	1027+85.36	1028+59.41	0.301	2.89	2.67	0.71	0.46	1.16	2.72	0.033	2.31	38.75
DCH181NL1	1029+20.42	1028+59.41	0.200	2.79	2.67	1.02	0.69	1.51	3.32	0.033	6.24	31.57
DCH181NL1	1031+74.44	1029+20.42	0.200	3.30	2.79	0.87	1.02	1.09	0.79	0.033	3.26	31.58
DCH181NL1	1032+23.85	1031+74.44	0.334	3.47	3.30	0.83	0.87	1.18	1.09	0.033	3.26	40.80
DCH181NL2	1030+44.84	1031+00.00	0.374	3.96	3.79	0.32	0.23	1.03	1.97	0.015	0.43	44.13
DCH181NL2	1031+70.03	1031+00.00	0.295	3.97	3.79	0.40	0.29	1.18	2.19	0.015	0.74	39.17

NO.	REVISIONS	BY	DATE

PRELIMINARY
FOR REVIEW ONLY
THESE DOCUMENTS ARE PRELIMINARY AND SUBJECT TO CHANGE. THEY ARE NOT INTENDED FOR CONSTRUCTION OR BIDDING. THEY WERE PREPARED BY, OR UNDER THE SUPERVISION OF:
Engineer: JACEK KWASNIEWSKI
P.E. No.: 95757
Date: 4/25/2017

RELEASE FOR CONSTRUCTION

US 181 HARBOR BRIDGE

HYDRAULIC DATA SHEET

FLATIRON/DRAGADOS LLC

Stantec
Engineered by Stantec Consulting Services Inc.
Texas Registered Engineering Firm F-6324

Texas Department of Transportation
© 2017

SHEET 6 OF 7

FED. RD. DIV. NO.	FEDERAL AID PROJECT NO.		SHEET NO.
6	HP X597(1)		DRN 006
STATE	STATE DIST. NO.	COUNTY	
TEXAS	CRP	NUECES	
CONT.	SECT	JOB	HIGHWAY NO.
0101	06	095	US181

PROJECT: US 181 HARBOR BRIDGE

REVIEW PHASE: ☐ Detail Check ☐ Internal Review ☐ Design Review ☐ TxDOT ☐ Drawing ☐ Report ☐ Other:

Prepared By: Date:
☐ Drawing Checked Against Calculations ☐ Calculations Check Confirmed

Checked by: Date:
Back-Checked by: Date:
Corrected by: Date:
Verified by: Date:

Plotted: 4/25/2017 3:08:44 PM
Pen Table: HBR_Packlb_DRN.tbl
Design File: pw:\\stantec-sc-pw.bentley.com:stantec-sc-pw\Documents\01 Projects\HBR\Build Work\Design\08-Drainage\08.01-Sheets\08.01A-North Package\ALTERNATE-B\HBR_DRN_NORTH_HYD06.dgn

NOTE:
THESE TABLES CONTAIN HYDRAULIC DATA FOR DRAINAGE SYSTEMS IN PACKAGES 1A AND 1B. REFER TO CORRESPONDING PACKAGE FOR PLAN & PROFILE SHEETS.

CULV-OUT5 SYSTEM - DITCH ANALYSIS (10 YR)

DITCH ID	POINT OF ANALYSIS		SLOPE	NODE INVERT	NODE INVERT	ACTUAL DETPH	ACTUAL DETPH	ACTUAL VELOCITY	ACTUAL VELOCITY	MANNING'S N VALUE	DISCHARGE	CAPACITY
	NODE STATION UPSTREAM	NODE STATION DOWNSTREAM		UPSTREAM	DOWNSTREAM	UPSTREAM	DOWNSTREAM	UPSTREAM	DOWNSTREAM			
			%	FT	FT	FT	FT	FT/S	FT/S		CFS	CFS
DCH181NR1	1034+47.99	1034+00.00	0.291	3.52	3.39	0.86	0.60	1.49	3.10	0.033	4.39	38.11
DCH181NR1	1033+50.00	1034+00.00	0.490	3.63	3.39	0.87	0.64	1.72	3.21	0.033	5.24	49.40
DCH181NR1	1035+22.96	1034+47.99	0.587	3.96	3.52	0.71	0.86	1.59	1.10	0.033	3.23	54.09
DCH181NR1	1031+86.65	1033+50.00	0.448	4.36	3.63	0.72	0.87	1.48	1.00	0.033	3.05	47.27
DCH181NR1	1036+02.27	1035+22.96	1.300	5.00	3.96	0.48	0.71	1.92	0.88	0.033	1.79	80.50
DCH181NR1	1031+14.34	1031+86.65	0.199	4.50	4.36	0.81	0.72	1.17	1.48	0.033	3.05	31.51
DCH181NR1	1037+03.20	1036+02.27	2.028	7.04	5.00	0.52	0.48	1.63	1.92	0.033	1.79	100.55
DCH181NR1	1029+54.79	1031+14.34	0.201	4.82	4.50	0.58	0.81	0.67	0.35	0.033	0.91	31.62
DCH181NR1	1029+04.93	1029+54.79	0.201	4.92	4.82	0.56	0.58	0.72	0.67	0.033	0.91	31.62

SBFRN-OUT5 SYSTEM - DITCH ANALYSIS (10 YR)

DITCH ID	POINT OF ANALYSIS		SLOPE	NODE INVERT	NODE INVERT	ACTUAL DETPH	ACTUAL DETPH	ACTUAL VELOCITY	ACTUAL VELOCITY	MANNING'S N VALUE	DISCHARGE	CAPACITY
	NODE STATION UPSTREAM	NODE STATION DOWNSTREAM		UPSTREAM	DOWNSTREAM	UPSTREAM	DOWNSTREAM	UPSTREAM	DOWNSTREAM			
			%	FT	FT	FT	FT	FT/S	FT/S		CFS	CFS
DCH181NR2	1039+04.51	1038+70.86	1.129	11.23	10.85	0.38	0.76	0.25	0.06	0.015	0.15	76.65
DCH181NR2	1042+44.90	1043+15.08	1.673	8.92	7.75	0.30	0.36	1.16	0.81	0.033	0.41	42.41
DCH181NR2	1043+15.08	1043+58.77	4.673	7.75	5.82	0.36	0.22	0.81	2.17	0.033	0.41	70.87
DCH181NL2	1042+11.55	1041+51.02	0.301	3.69	3.50	0.42	0.41	0.79	0.82	0.033	0.55	17.98
DCH181NL2	1041+51.02	1040+39.68	0.300	3.50	3.17	0.41	0.51	0.82	0.53	0.033	0.55	17.96
DCH181NL2	1040+39.68	1040+00.00	0.316	3.17	3.05	0.51	0.34	1.01	2.32	0.033	1.04	18.42
DCH181NL2	1035+61.87	1036+07.24	0.249	4.15	4.03	0.39	0.38	0.71	0.74	0.033	0.43	16.36
DCH181NL2	1036+07.24	1039+54.41	0.250	4.03	3.16	0.38	0.57	0.74	0.33	0.033	0.43	16.39
DCH181NL2	1039+54.41	1040+00.00	0.262	3.16	3.05	0.57	0.37	1.03	2.43	0.033	1.33	16.77

NO.	REVISIONS	BY	DATE

PRELIMINARY
FOR REVIEW ONLY
THESE DOCUMENTS ARE PRELIMINARY AND SUBJECT TO CHANGE. THEY ARE NOT INTENDED FOR CONSTRUCTION OR BIDDING. THEY WERE PREPARED BY, OR UNDER THE SUPERVISION OF:
Engineer: JACEK KWASNIEWSKI
P.E. No.: 95757
Date: 4/25/2017

RELEASE FOR CONSTRUCTION

US 181 HARBOR BRIDGE

HYDRAULIC DATA SHEET

FLATIRON/DRAGADOS LLC

Stantec
Engineered by Stantec Consulting Services Inc.
Texas Registered Engineering Firm F-6324

Texas Department of Transportation
© 2017

SHEET 7 OF 7

FED. RD. DIV. NO.	FEDERAL AID PROJECT NO.		SHEET NO.
6	HP X597(1)		DRN 007
STATE	STATE DIST. NO.	COUNTY	
TEXAS	CRP	NUECES	
CONT.	SECT	JOB	HIGHWAY NO.
0101	06	095	US181

PROJECT
US 181 HARBOR BRIDGE

REVIEW PHASE
☐ Detail Check ☐ Internal Review ☐ Design Review ☐ TxDOT
☐ Drawing ☐ Report ☐ Other:
Prepared By: Date:
☐ Drawing Checked Against Calculations ☐ Calculations Check Confirmed
Checked by: Date:
Back-Checked by: Date:
Corrected by: Date:
Verified by: Date:

Plotted: 4/25/2017 3:08:47 PM
Pen Table: HBR_PackIB_DRN.tbl
Design File: pw:\\stantec-sc-pw.bentley.com:stantec-sc-pw\Documents\01 Projects\HBR\Build Work\Design\08-Drainage\08.01-Sheets\08.01A-North Package\ALTERNATE-B\HBR_DRN_NORTH_HYD07.dgn

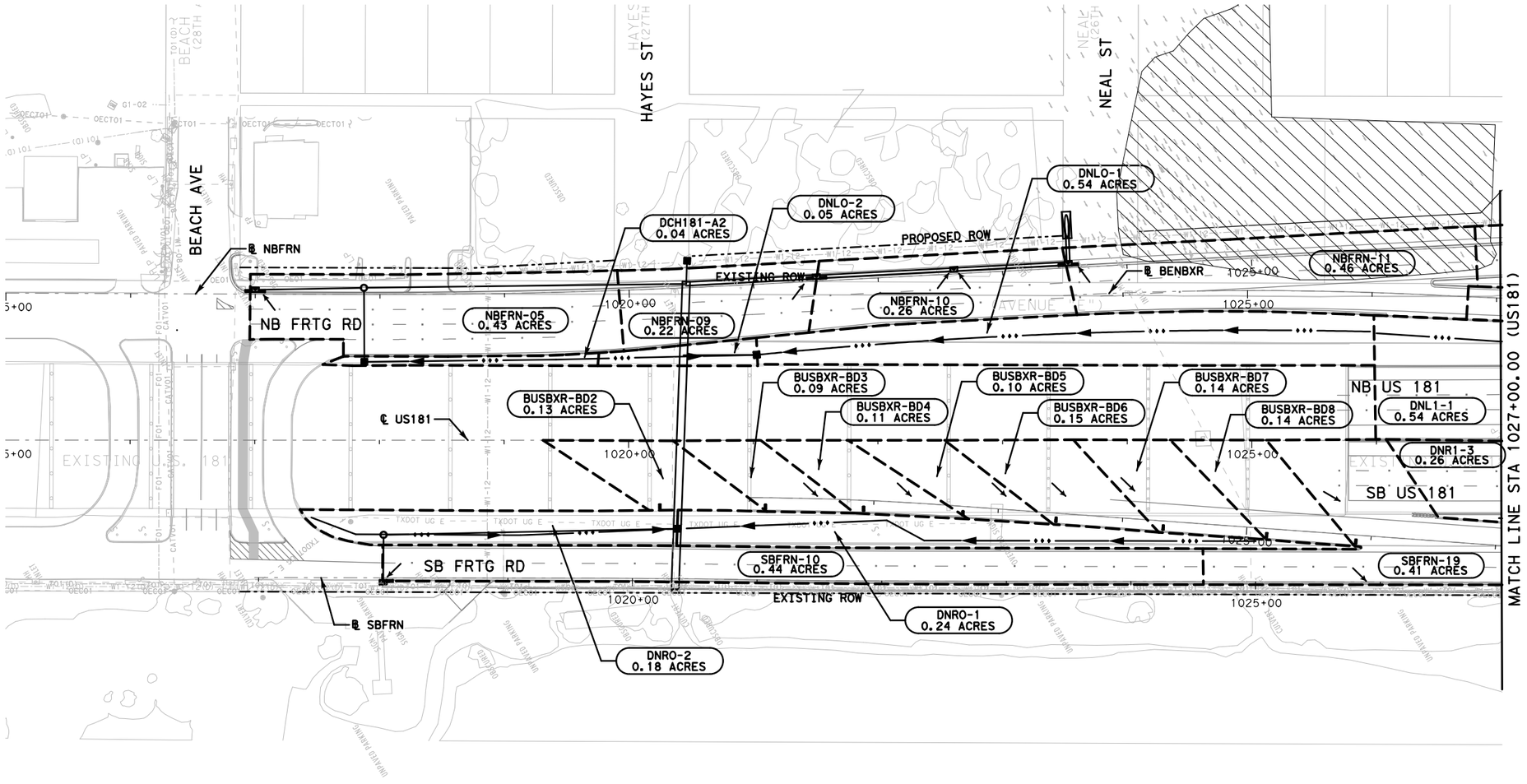

LEGEND

- DRAINAGE AREA BOUNDARY
- BASIN ID / DA ACRES — DRAINAGE AREA IDENTIFIER
- SURFACE FLOW ARROW
- EXISTING WETLANDS
- PROPOSED DITCH

NO.	REVISIONS	BY	DATE

PRELIMINARY
FOR REVIEW ONLY
THESE DOCUMENTS ARE PRELIMINARY AND SUBJECT TO CHANGE. THEY ARE NOT INTENDED FOR CONSTRUCTION OR BIDDING. THEY WERE PREPARED BY, OR UNDER THE SUPERVISION OF:
Engineer: JACEK KWASNIEWSKI
P.E. No.: 95757
Date: 4/25/2017

RELEASE FOR CONSTRUCTION

US 181 HARBOR BRIDGE

DRAINAGE AREA MAP

STA 1015+00.00-STA 1027+00.00

SCALE: 1"=100'

FLATIRON/DRAGADOS LLC

Stantec
Engineered by Stantec Consulting Services Inc.
Texas Registered Engineering Firm F-6324

Texas Department of Transportation
© 2017
SHEET 1 OF 8

FED. RD. DIV. NO.	FEDERAL AID PROJECT NO.		SHEET NO.
6	HP X597(1)		DRN 008
STATE	STATE DIST. NO.	COUNTY	
TEXAS	CRP	NUECES	
CONT.	SECT	JOB	HIGHWAY NO.
0101	06	095	US181

PROJECT
US 181 HARBOR BRIDGE

Checked by: Date:
Back-Checked by: Date:
Corrected by: Date:
Verified by: Date:

REVIEW PHASE
☐ Detail Check ☐ Internal Review ☐ Design Review ☐ TxDOT
☐ Drawing ☐ Report ☐ Other:
Prepared By: Date:
☐ Drawing Checked Against Calculations ☐ Calculations Check Confirmed

Plotted: 4/25/2017 3:08:54 PM
Pen Table: HBR_Pack18_DRN.tbl
Design File: pw:\\stantec-sc-pw.bentley.com:stantec-sc-pw\Documents\01 Projects\HBR\Build Work\Design\08-Drainage\08.01-Sheets\08.01A-North Package\ALTERNATE-B\HBR_DRN_US181_DA01.dgn

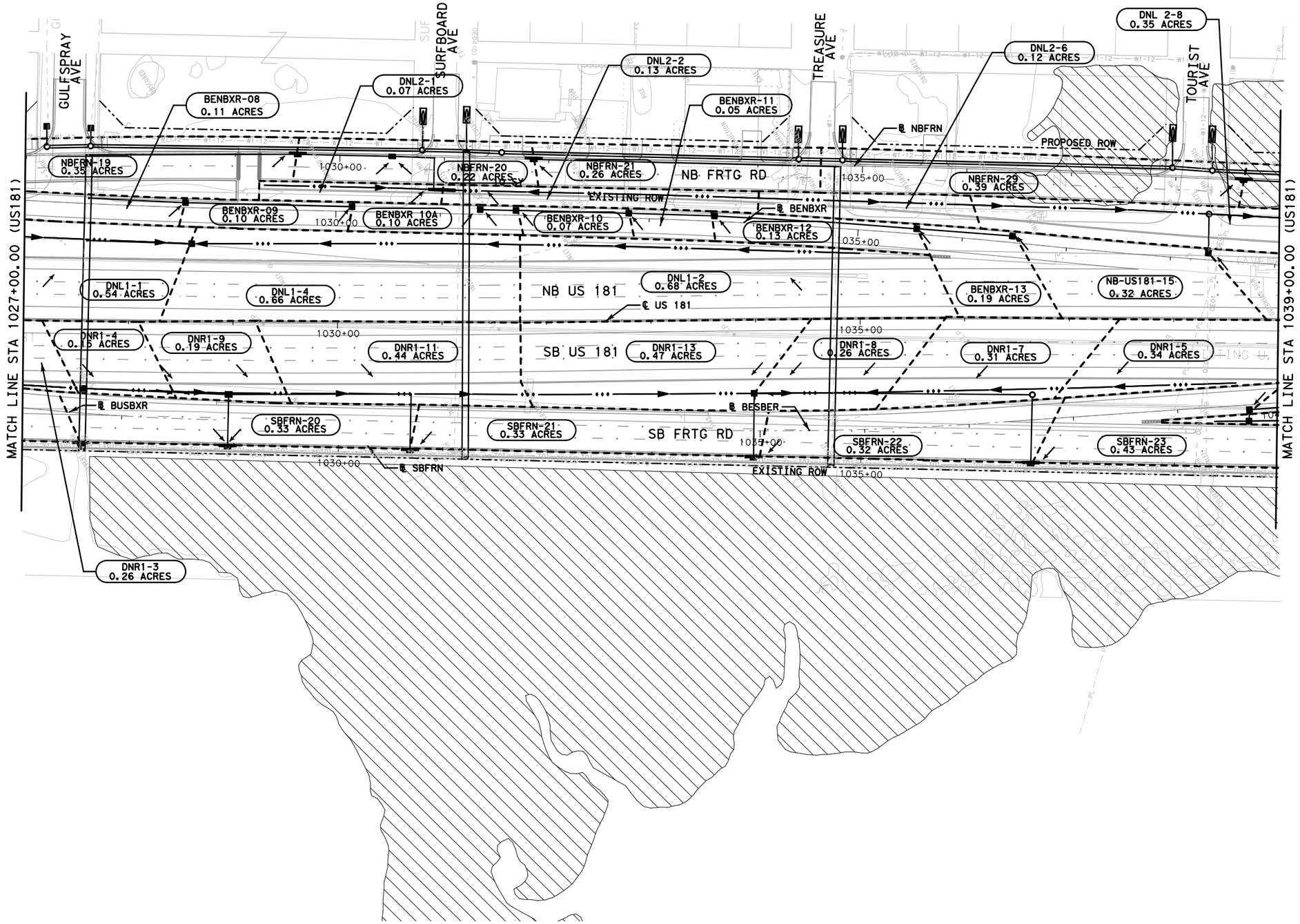

LEGEND

- DRAINAGE AREA BOUNDARY
- BASIN ID / DA ACRES — DRAINAGE AREA IDENTIFIER
- SURFACE FLOW ARROW
- EXISTING WETLANDS
- PROPOSED DITCH

PROJECT
US 181 HARBOR BRIDGE

Checked by: Date:
Back-Checked by: Date:
Corrected by: Date:
Verified by: Date:

☐ TxDOT ☐ Design Review ☐ Internal Review ☐ Detail Check
Other: ☐ Report ☐ Drawing

Prepared By: Date:
☐ Calculations Check Confirmed
☐ Drawing Checked Against Calculations

REVIEW PHASE

Plotted: 4/25/2017 3:08:59 PM
Pen Table: HBR_Pack1B_DRN.tbl
Design File: pw:\\stantec-sc-pw.bentley.com:stantec-sc-pw\Documents\01 Projects\HBR\Build Work\Design\08-Drainage\08.01-Sheets\08.01A-North Package\ALTERNATE-B\HBR_DRN_US181_DA02.dgn

NO.	REVISIONS	BY	DATE

PRELIMINARY
FOR REVIEW ONLY
THESE DOCUMENTS ARE PRELIMINARY AND SUBJECT TO CHANGE. THEY ARE NOT INTENDED FOR CONSTRUCTION OR BIDDING. THEY WERE PREPARED BY, OR UNDER THE SUPERVISION OF:
Engineer: JACEK KWASNIEWSKI
P.E. No.: 95757
Date: 4/25/2017

RELEASE FOR CONSTRUCTION

US 181 HARBOR BRIDGE

DRAINAGE AREA MAP

STA 1027+00.00-STA 1039+00.00

SCALE: 1"=100'

FLATIRON/DRAGADOS LLC

Stantec
Engineered by Stantec Consulting Services Inc.
Texas Registered Engineering Firm F-6324

Texas Department of Transportation
© 2017
SHEET 2 OF 8

FED. RD. DIV. NO.	FEDERAL AID PROJECT NO.		SHEET NO.
6	HP X597(1)		DRN 009
STATE	STATE DIST. NO.	COUNTY	
TEXAS	CRP	NUECES	
CONT.	SECT	JOB	HIGHWAY NO.
0101	06	095	US181

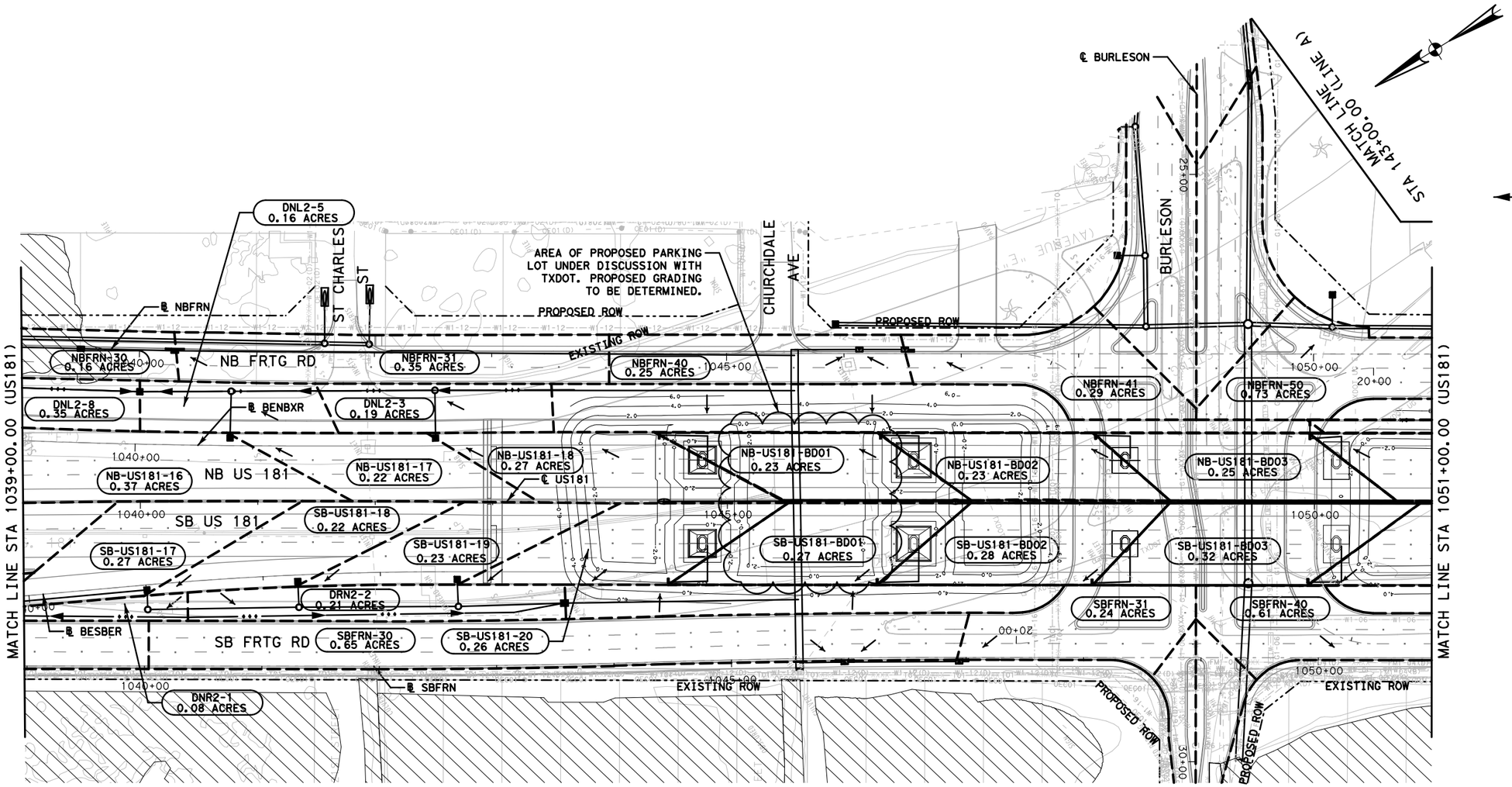

LEGEND

- DRAINAGE AREA BOUNDARY
- BASIN ID / DA ACRES — DRAINAGE AREA IDENTIFIER
- SURFACE FLOW ARROW
- EXISTING WETLANDS
- PROPOSED DITCH

PROJECT
US 181 HARBOR BRIDGE

Checked by: Date:
Back-Checked by: Date:
Corrected by: Date:
Verified by: Date:

☐ TxDOT

☐ Detail Check ☐ Internal Review ☐ Design Review
☐ Drawing ☐ Report ☐ Other:
Prepared By: Date:
☐ Drawing Checked Against Calculations ☐ Calculations Check Confirmed

REVIEW PHASE

Plotted: 4/25/2017 3:09:06 PM
Pen Table: HBR_Pack1B_DRN.tbl
Design File: pw:\\stantec-sc-pw.bentley.com:stantec-sc-pw\Documents\01 Projects\HBR\Build Work\Design\08-Drainage\08.01-Sheets\08.01A-North Package\ALTERNATE-B\HBR_DRN_US181_DA03.dgn

NO.	REVISIONS	BY	DATE

PRELIMINARY
FOR REVIEW ONLY
THESE DOCUMENTS ARE PRELIMINARY AND SUBJECT TO CHANGE. THEY ARE NOT INTENDED FOR CONSTRUCTION OR BIDDING. THEY WERE PREPARED BY, OR UNDER THE SUPERVISION OF:
Engineer: JACEK KWASNIEWSKI
P.E. No.: 95757
Date: 4/25/2017

RELEASE FOR CONSTRUCTION

US 181 HARBOR BRIDGE

DRAINAGE AREA MAP

STA 1039+00.00-STA 1051+00.00

SCALE: 1"=100'

FLATIRON/DRAGADOS LLC

Stantec
Engineered by Stantec Consulting Services Inc.
Texas Registered Engineering Firm F-6324

Texas Department of Transportation
© 2017
SHEET 3 OF 8

FED. RD. DIV. NO.	FEDERAL AID PROJECT NO.		SHEET NO.
6	HP X597(1)		DRN 010
STATE	STATE DIST. NO.	COUNTY	
TEXAS	CRP	NUECES	
CONT.	SECT	JOB	HIGHWAY NO.
0101	06	095	US181

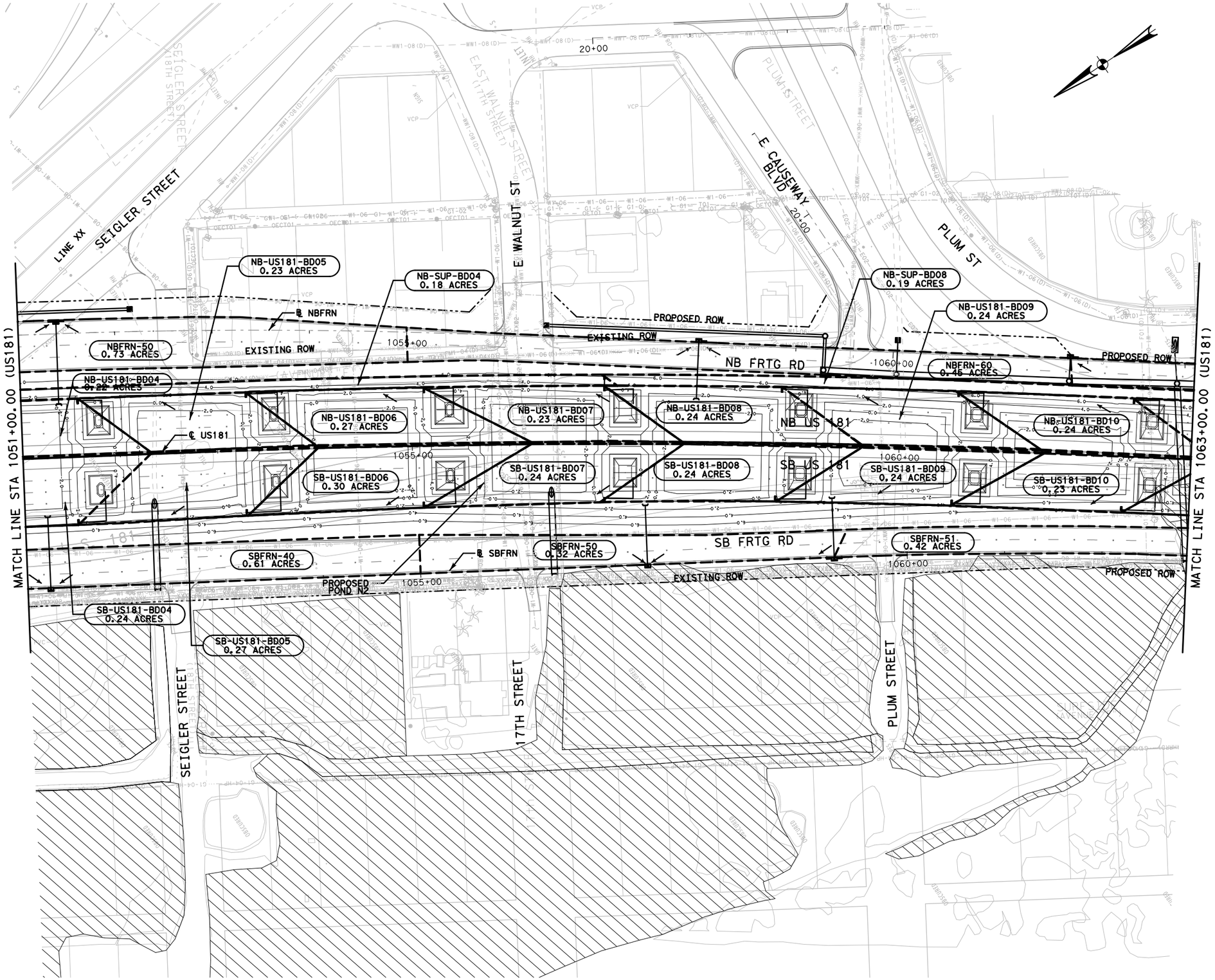

LEGEND

- DRAINAGE AREA BOUNDARY
- BASIN ID / DA ACRES — DRAINAGE AREA IDENTIFIER
- SURFACE FLOW ARROW
- EXISTING WETLANDS
- PROPOSED DITCH

PROJECT
US 181 HARBOR BRIDGE

Checked by: Date:
Back-Checked by: Date:
Corrected by: Date:
Verified by: Date:

☐ Detail Check ☐ Internal Review ☐ Design Review ☐ TxDOT
☐ Drawing ☐ Report ☐ Other:

Prepared By: Date:

☐ Drawing Checked Against Calculations ☐ Calculations Check Confirmed

REVIEW PHASE

Plotted: 4/25/2017 3:09:11 PM
Pen Table: HBR_Pack1B_DRN.tbl
Design File: pw:\\stantec-sc-pw.bentley.com:stantec-sc-pw\Documents\01 Projects\HBR\Build Work\Design\08-Drainage\08.01-Sheets\08.01A-North Package\ALTERNATE-B\HBR_DRN_US181_DA04.dgn

NO.	REVISIONS	BY	DATE

PRELIMINARY
FOR REVIEW ONLY
THESE DOCUMENTS ARE PRELIMINARY AND SUBJECT TO CHANGE. THEY ARE NOT INTENDED FOR CONSTRUCTION OR BIDDING. THEY WERE PREPARED BY, OR UNDER THE SUPERVISION OF:
Engineer: JACEK KWASNIEWSKI
P.E. No.: 95757
Date: 4/25/2017

RELEASE FOR CONSTRUCTION

US 181 HARBOR BRIDGE

DRAINAGE AREA MAP

STA 1051+00.00-STA 1063+00.00

SCALE: 1"=100'

FLATIRON/DRAGADOS LLC

Stantec
Engineered by Stantec Consulting Services Inc.
Texas Registered Engineering Firm F-6324

Texas Department of Transportation
© 2017
SHEET 4 OF 8

FED. RD. DIV. NO.	FEDERAL AID PROJECT NO.		SHEET NO.
6	HP X597(1)		DRN 011
STATE	STATE DIST. NO.	COUNTY	
TEXAS	CRP	NUECES	
CONT.	SECT	JOB	HIGHWAY NO.
0101	06	095	US181

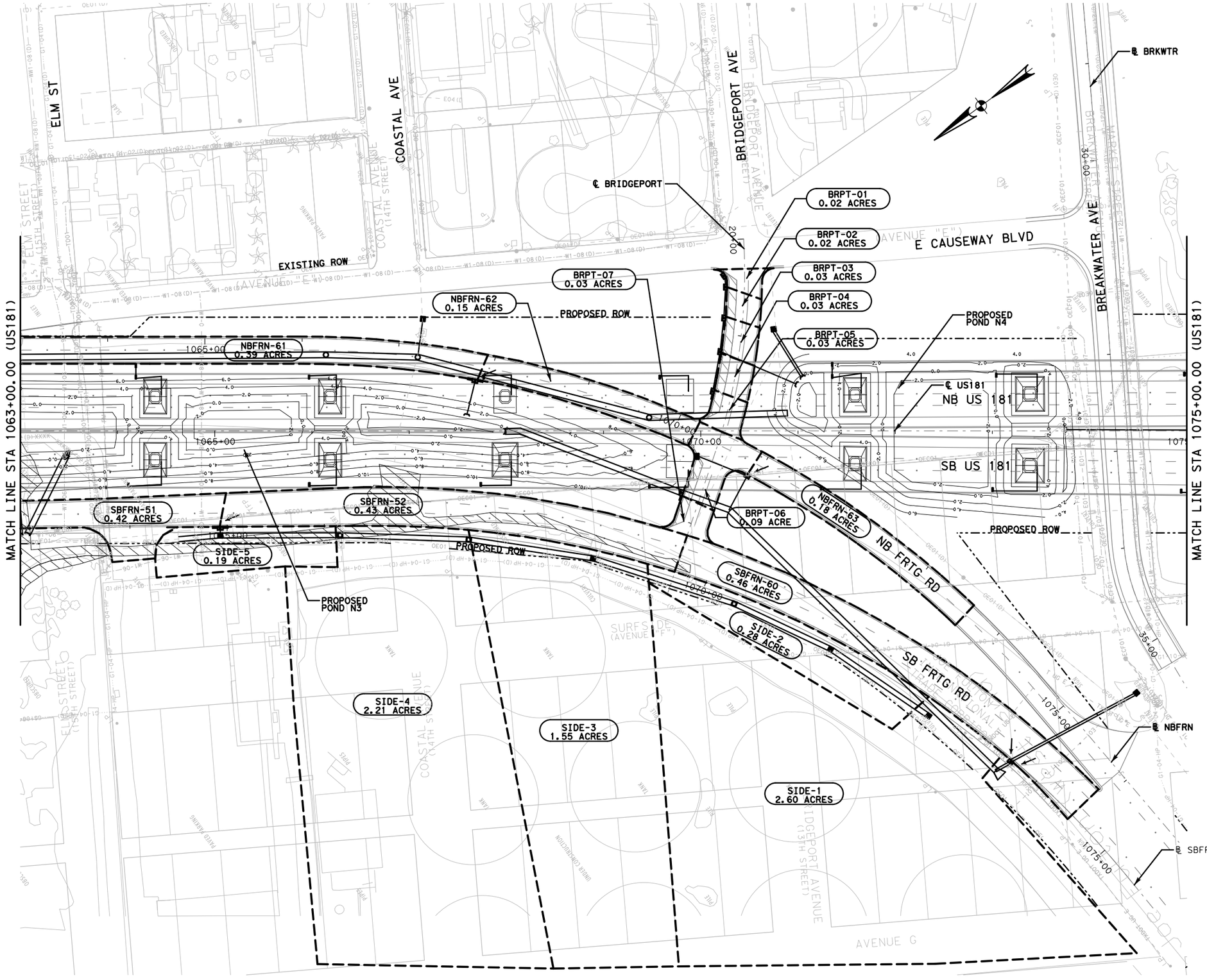

LEGEND

- DRAINAGE AREA BOUNDARY
- BASIN ID / DA ACRES — DRAINAGE AREA IDENTIFIER
- SURFACE FLOW ARROW
- EXISTING WETLANDS
- PROPOSED DITCH

NOTE

1. OVERLAPPING DRAINAGE AREAS FOR US181 ARE SHOWN ON SHEET 011.

NO.	REVISIONS	BY	DATE

PRELIMINARY
FOR REVIEW ONLY
THESE DOCUMENTS ARE PRELIMINARY AND SUBJECT TO CHANGE. THEY ARE NOT INTENDED FOR CONSTRUCTION OR BIDDING. THEY WERE PREPARED BY, OR UNDER THE SUPERVISION OF:
Engineer: JACEK KWASNIEWSKI
P.E. No.: 95757
Date: 4/25/2017

RELEASE FOR CONSTRUCTION

US 181 HARBOR BRIDGE

DRAINAGE AREA MAP

STA 1063+00.00-STA 1075+00.00

SCALE: 1"=100'

FLATIRON/DRAGADOS LLC

Stantec
Engineered by Stantec Consulting Services Inc.
Texas Registered Engineering Firm F-6324

Texas Department of Transportation
© 2017 SHEET 8 OF 8

FED. RD. DIV. NO.	FEDERAL AID PROJECT NO.		SHEET NO.
6	HP X597(1)		DRN 012
STATE	STATE DIST. NO.	COUNTY	
TEXAS	CRP	NUECES	
CONT.	SECT	JOB	HIGHWAY NO.
0101	06	095	US181

PROJECT
US 181 HARBOR BRIDGE

Checked by: Date:
Back-Checked by: Date:
Corrected by: Date:
Verified by: Date:

☐ TxDOT
☐ Detail Check ☐ Internal Review ☐ Design Review
☐ Drawing ☐ Report ☐ Other:
Prepared By: Date:
☐ Drawing Checked Against Calculations ☐ Calculations Check Confirmed
REVIEW PHASE

Plotted: 4/25/2017 3:09:17 PM
Pen Table: HBR_Pack1B_DRN.tbl
Design File: pw:\\stantec-sc-pw.bentley.com:stantec-sc-pw\Documents\01 Projects\HBR\Build Work\Design\08-Drainage\08.01-Sheets\08.01A-North Package\ALTERNATE-B\HBR_DRN_FRN_DA05.dgn

LEGEND

- DRAINAGE AREA BOUNDARY
- BASIN ID / DA ACRES — DRAINAGE AREA IDENTIFIER
- SURFACE FLOW ARROW
- EXISTING WETLANDS
- PROPOSED DITCH

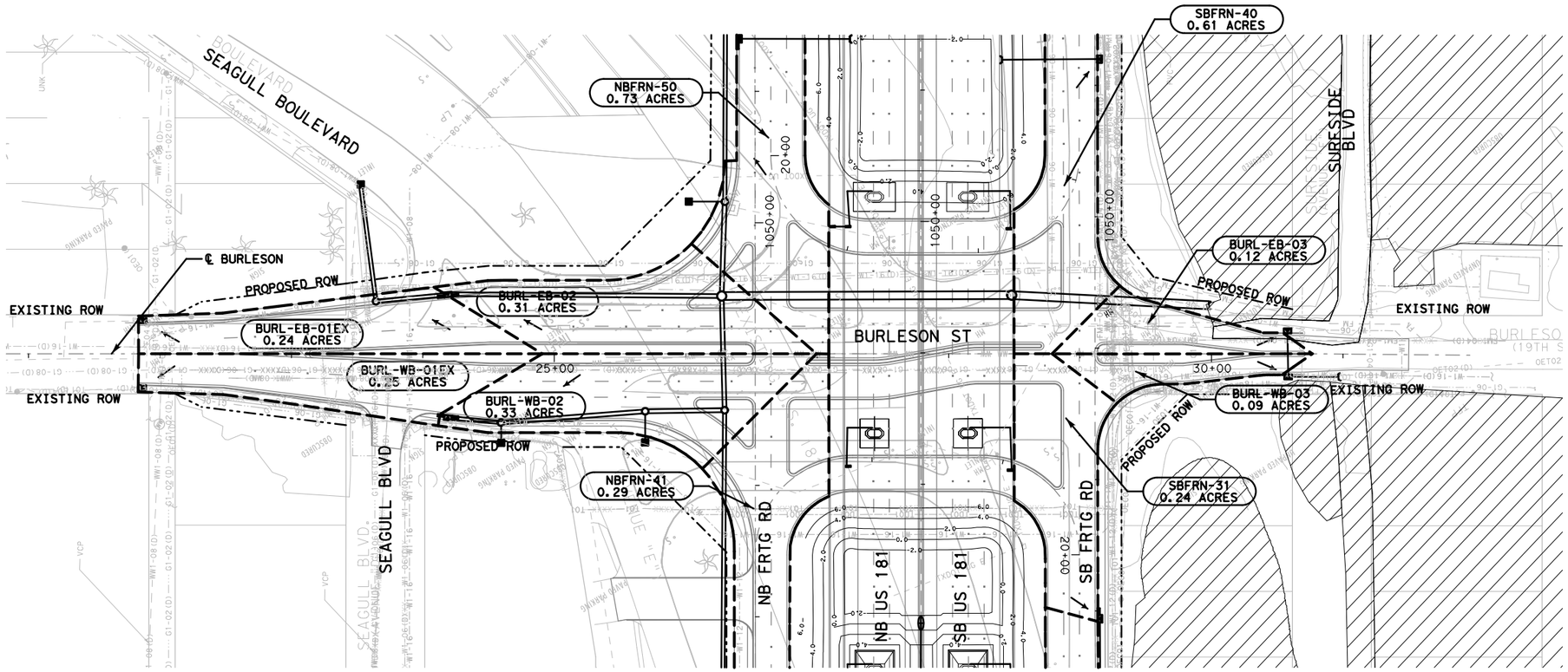

PROJECT
US 181 HARBOR BRIDGE

Checked by: Date:
Back-Checked by: Date:
Corrected by: Date:
Verified by: Date:

☐ Detail Check ☐ Internal Review ☐ Design Review ☐ TxDOT
☐ Drawing ☐ Report ☐ Other:
Prepared By: Date:
☐ Drawing Checked Against Calculations ☐ Calculations Check Confirmed

REVIEW PHASE

Plotted: 4/25/2017 3:09:23 PM
Pen Table: HBR_Pack1B_DRN.tbl
Design File: pw:\\stantec-sc-pw.bentley.com:stantec-sc-pw\Documents\01 Projects\HBR\Build Work\Design\08-Drainage\08.01-Sheets\08.01A-North Package\ALTERNATE-B\HBR_DRN_BURLESON_DA01.dgn

NO.	REVISIONS	BY	DATE

PRELIMINARY
FOR REVIEW ONLY
THESE DOCUMENTS ARE PRELIMINARY AND SUBJECT TO CHANGE. THEY ARE NOT INTENDED FOR CONSTRUCTION OR BIDDING. THEY WERE PREPARED BY, OR UNDER THE SUPERVISION OF:
Engineer: JACEK KWASNIEWSKI
P.E. No.: 95757
Date: 4/25/2017

ADVANCED STATUS

NOT FOR CONSTRUCTION

US 181 HARBOR BRIDGE

DRAINAGE AREA MAP (BURLESON)

STA 20+00.00-STA 32+00.00

SCALE: 1"=100'

FLATIRON/DRAGADOS

FLATIRON/DRAGADOS LLC

Stantec
Engineered by Stantec Consulting Services Inc.
Texas Registered Engineering Firm F-6324

Texas Department of Transportation
© 2017 SHEET 1 OF 1

FED. RD. DIV. NO.	FEDERAL AID PROJECT NO.		SHEET NO.
6	HP X597(1)		DRN 013
STATE	STATE DIST. NO.	COUNTY	
TEXAS	CRP	NUECES	
CONT.	SECT	JOB	HIGHWAY NO.
0101	06	095	US181

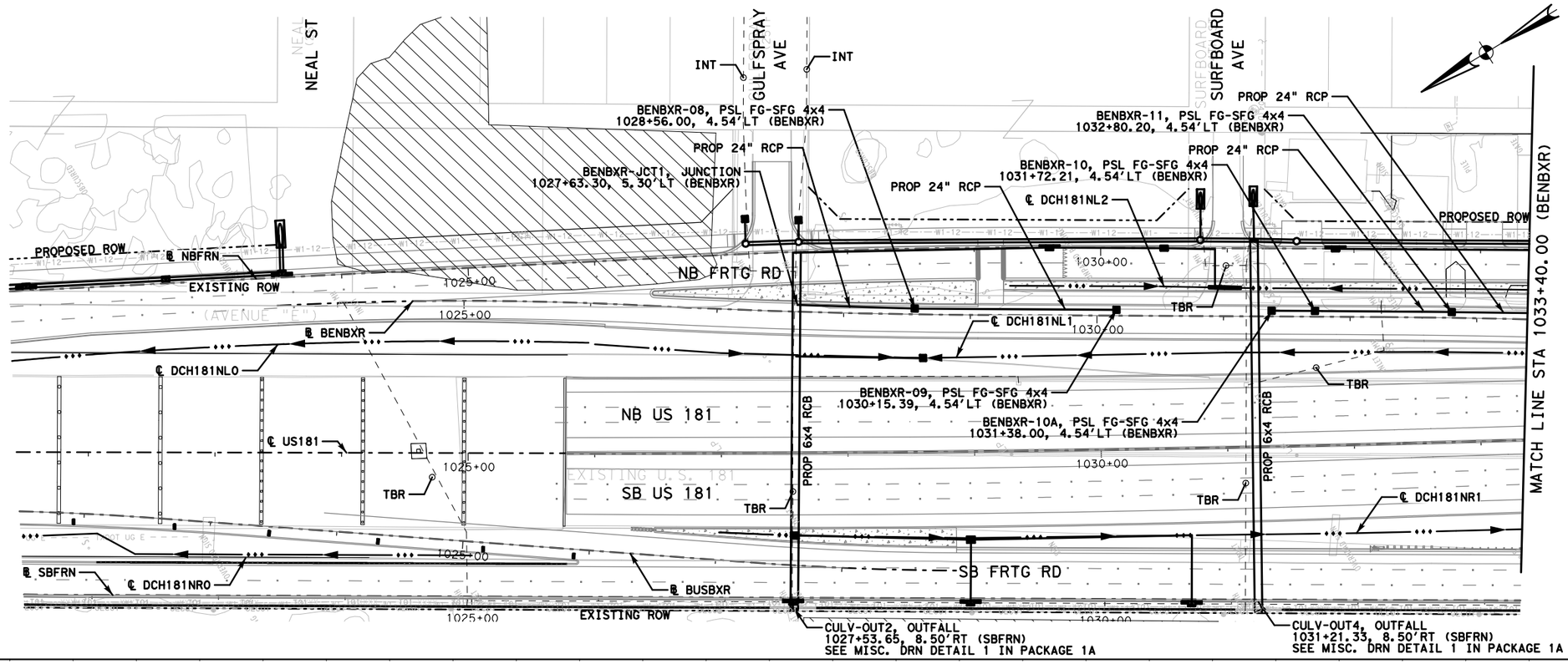

LEGEND

- 1.5" PFC
- RIPRAP
- DITCH
- PROPOSED MSE WALL
- EXISTING WETLANDS
- EXISTING STORM SEWER
- TBR — TO BE REMOVED
- INT — INTERCEPT EXISTING PIPE

NOTES:
1. DESIGN HGL WAS CALCULATED USING THE RINCON CHANNEL AVERAGE TIDEWATER ELEVATION OF +1.0' AS TAILWATER.
2. THE 10-YR TAILWATER (COSTAL FLOODING ELEVATION) IS +5.10'.
3. FOR DITCH PROFILES REFER TO PACKAGE 1A.

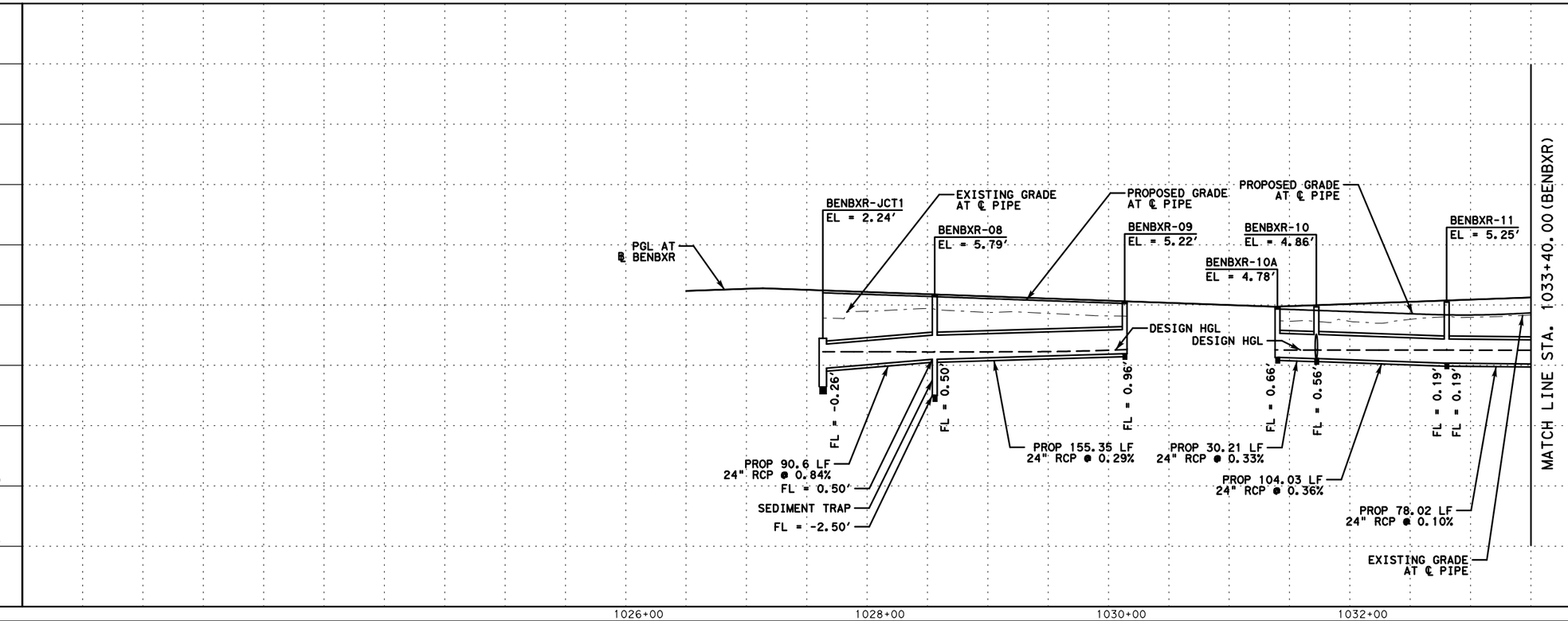

NO.	REVISIONS	BY	DATE

PRELIMINARY
FOR REVIEW ONLY
THESE DOCUMENTS ARE PRELIMINARY AND SUBJECT TO CHANGE. THEY ARE NOT INTENDED FOR CONSTRUCTION OR BIDDING. THEY WERE PREPARED BY, OR UNDER THE SUPERVISION OF:
Engineer: JACEK KWASNIEWSKI
P.E. No.: 95757
Date: 4/25/2017

ADVANCED STATUS

NOT FOR CONSTRUCTION

US 181 HARBOR BRIDGE

DRAINAGE PLAN & PROFILE (BENBXR) EXIT RAMP

STA. 1025+48.23-STA. 1033+40
SCALE: 1"=100' H
1"=10' V

FLATIRON/DRAGADOS LLC

Stantec
Engineered by Stantec Consulting Services Inc.
Texas Registered Engineering Firm F-6324

Texas Department of Transportation
© 2017
SHEET 1 OF 2

FED. RD. DIV. NO.	FEDERAL AID PROJECT NO.		SHEET NO.
6	HP X597(1)		DRN 014
STATE	STATE DIST. NO.	COUNTY	
TEXAS	CRP	NUECES	
CONT.	SECT	JOB	HIGHWAY NO.
0101	06	095	US181

PROJECT
US 181 HARBOR BRIDGE

Checked by: Date:
Back-Checked by: Date:
Corrected by: Date:
Verified by: Date:

☐ TxDOT
☐ Detail Check ☐ Internal Review ☐ Design Review
☐ Drawing ☐ Report ☐ Other:
Prepared By: Date:
☐ Drawing Checked Against Calculations ☐ Calculations Check Confirmed
REVIEW PHASE

Plotted: 4/25/2017 3:09:29 PM
Pen Table: HBR_Pack1B_DRN.tbl
Design File: pw:\\stantec-sc-pw.bentley.com:stantec-sc-pw\Documents\01 Projects\HBR\Build Work\Design\08-Drainage\08.01-Sheets\08.01A-North Package\ALTERNATE-B\HBR_DRN_BENBXR_PP01.dgn

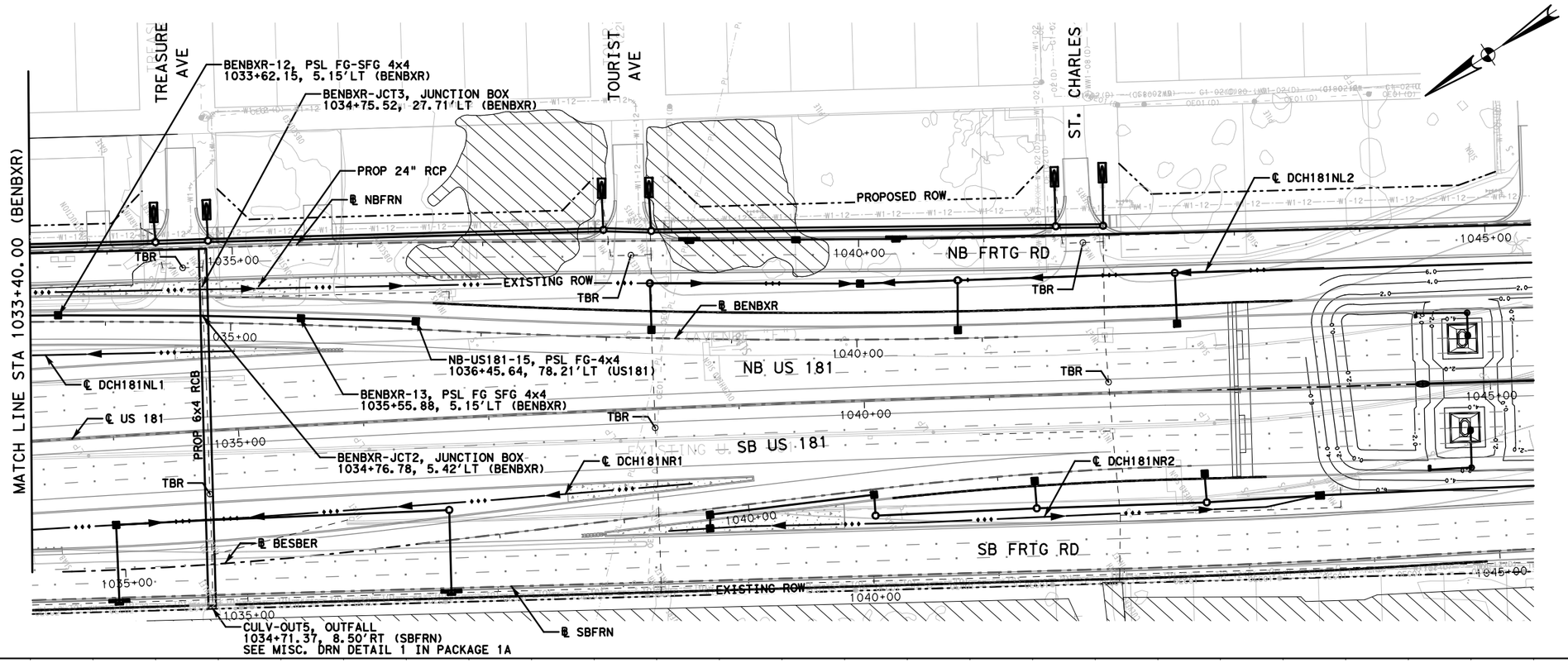

LEGEND

- 1.5" PFC
- RIPRAP
- DITCH
- PROPOSED MSE WALL
- EXISTING WETLANDS
- EXISTING STORM SEWER
- TBR — TO BE REMOVED
- INT — INTERCEPT EXISTING PIPE

NOTES:
1. DESIGN HGL WAS CALCULATED USING THE RINCON CHANNEL AVERAGE TIDEWATER ELEVATION OF +1.0' AS TAILWATER.
2. THE 10-YR TAILWATER (COSTAL FLOODING ELEVATION) IS +5.10'.
3. FOR DITCH PROFILE REFER TO PACKAGE 1A.

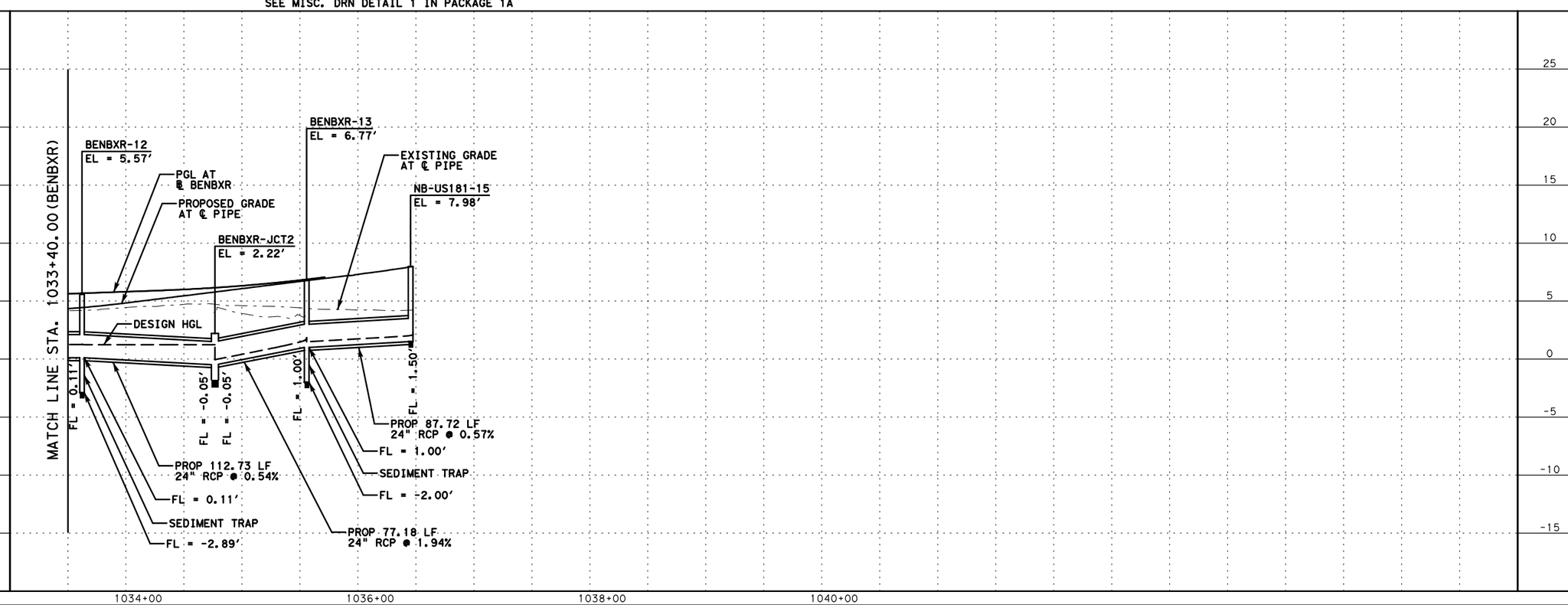

NO.	REVISIONS	BY	DATE

PRELIMINARY
FOR REVIEW ONLY
THESE DOCUMENTS ARE PRELIMINARY AND SUBJECT TO CHANGE. THEY ARE NOT INTENDED FOR CONSTRUCTION OR BIDDING. THEY WERE PREPARED BY, OR UNDER THE SUPERVISION OF:
Engineer: JACEK KWASNIEWSKI
P.E. No.: 95757
Date: 4/25/2017

ADVANCED STATUS

NOT FOR CONSTRUCTION

US 181 HARBOR BRIDGE

DRAINAGE PLAN & PROFILE (BENBXR) EXIT RAMP

STA. 1033+40-STA. 1041+28.12
SCALE: 1"=100'H
1"=10' V

FLATIRON/DRAGADOS LLC

Stantec
Engineered by Stantec Consulting Services Inc.
Texas Registered Engineering Firm F-6324

Texas Department of Transportation
© 2017

SHEET 2 OF 2

FED. RD. DIV. NO.	FEDERAL AID PROJECT NO.		SHEET NO.
6	HP X597(1)		DRN 015
STATE	STATE DIST. NO.	COUNTY	
TEXAS	CRP	NUECES	
CONT.	SECT	JOB	HIGHWAY NO.
0101	06	095	US181

PROJECT
US 181 HARBOR BRIDGE

Checked by: Date:
Back-Checked by: Date:
Corrected by: Date:
Verified by: Date:

☐ TxDOT
☐ Detail Check ☐ Internal Review ☐ Design Review
☐ Drawing ☐ Report ☐ Other:
Prepared By: Date:
☐ Drawing Checked Against Calculations ☐ Calculations Check Confirmed
REVIEW PHASE

Plotted: 4/25/2017 3:09:35 PM
Pen Table: HBR_Pack1B_DRN.tbl
Design File: pw:\\stantec-sc-pw.bentley.com:stantec-sc-pw\Documents\01 Projects\HBR\Build Work\Design\08-Drainage\08.01-Sheets\08.01A-North Package\ALTERNATE-B\HBR_DRN_BENBXR_PP02.dgn

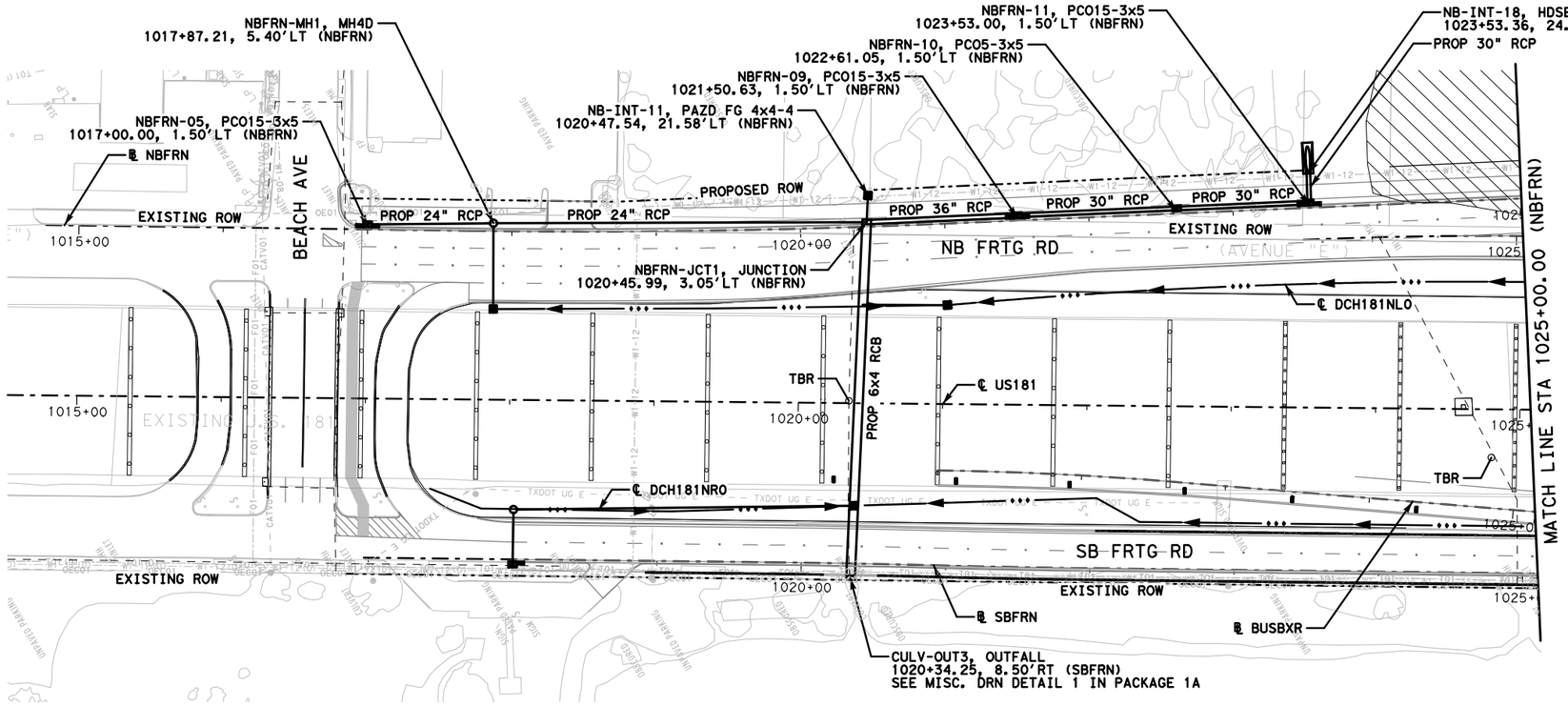

LEGEND

- 1.5" PFC
- RIPRAP
- DITCH
- PROPOSED MSE WALL
- EXISTING WETLANDS
- EXISTING STORM SEWER
- TBR — TO BE REMOVED
- INT — INTERCEPT EXISTING PIPE

NOTES:
1. DESIGN HGL WAS CALCULATED USING THE RINCON CHANNEL AVERAGE TIDEWATER ELEVATION OF +1.0' AS TAILWATER.
2. THE 10-YR TAILWATER (COSTAL FLOODING ELEVATION) IS +5.10'.
3. FOR DITCH PROFILE REFER TO PACKAGE 1A.

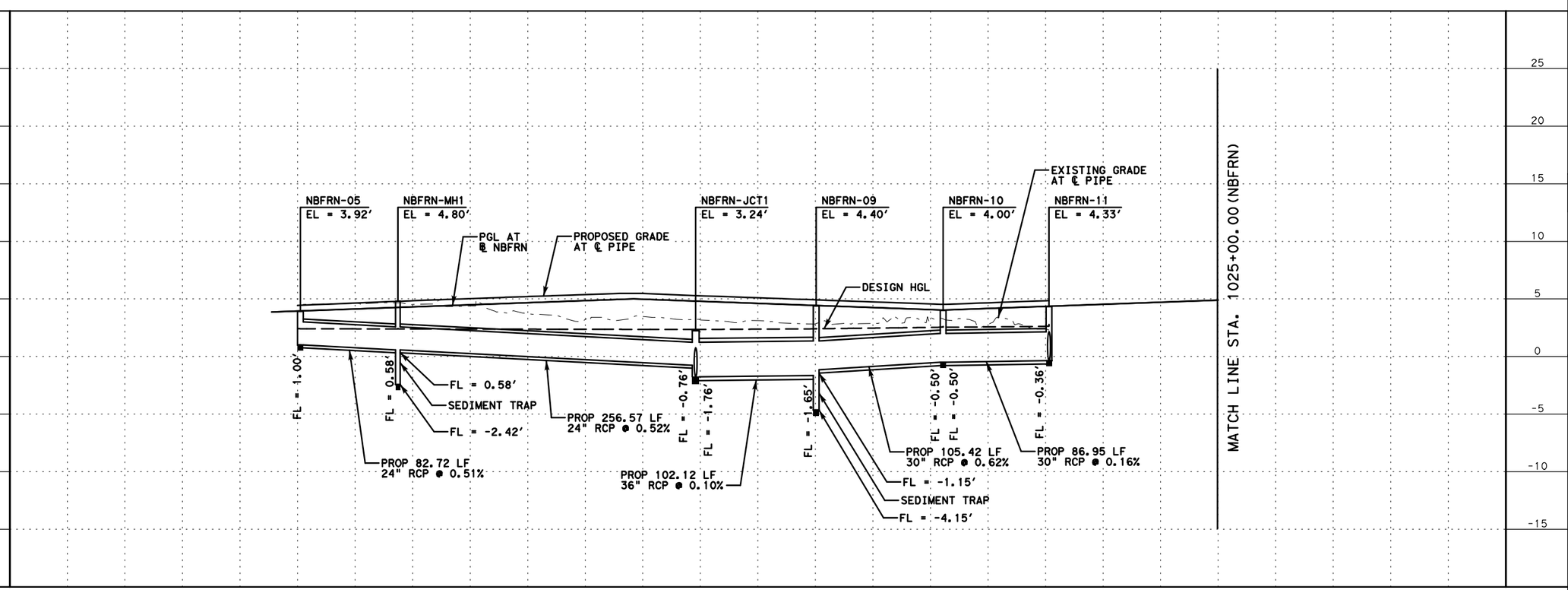

NO.	REVISIONS	BY	DATE

PRELIMINARY
FOR REVIEW ONLY
THESE DOCUMENTS ARE PRELIMINARY AND SUBJECT TO CHANGE. THEY ARE NOT INTENDED FOR CONSTRUCTION OR BIDDING. THEY WERE PREPARED BY, OR UNDER THE SUPERVISION OF:
Engineer: JACEK KWASNIEWSKI
P.E. No.: 95757
Date: 4/25/2017

ADVANCED STATUS

NOT FOR CONSTRUCTION

US 181 HARBOR BRIDGE

DRAINAGE PLAN & PROFILE (NBFRN) NORTH BOUND FRONTAGE ROAD

STA. 1016+06.84-STA. 1025+00
SCALE: 1"=100' H
1"=10' V

FLATIRON/DRAGADOS LLC

Stantec
Engineered by Stantec Consulting Services Inc.
Texas Registered Engineering Firm F-6324

Texas Department of Transportation
© 2017

SHEET 1 OF 5

FED. RD. DIV. NO.	FEDERAL AID PROJECT NO.		SHEET NO.
6	HP X597(1)		DRN 016
STATE	STATE DIST. NO.	COUNTY	
TEXAS	CRP	NUECES	
CONT.	SECT	JOB	HIGHWAY NO.
0101	06	095	US181

PROJECT
US 181 HARBOR BRIDGE

Checked by: Date:
Back-Checked by: Date:
Corrected by: Date:
Verified by: Date:

Calculations Check Confirmed
Drawing Checked Against Calculations

Prepared By: Date:

REVIEW PHASE: ☐ Detail Check ☐ Internal Review ☐ Design Review ☐ TxDOT ☐ Drawing ☐ Report ☐ Other:

Plotted: 4/25/2017 3:09:42 PM
Pen Table: HBR_Packl8_DRN.tbl
Design File: pw:\\stantec-sc-pw.bentley.com:stantec-sc-pw\Documents\01 Projects\HBR\Build Work\Design\08-Drainage\08.01-Sheets\08.01A-North Package\ALTERNATE-B\HBR_DRN_NBFRN_PP01.dgn

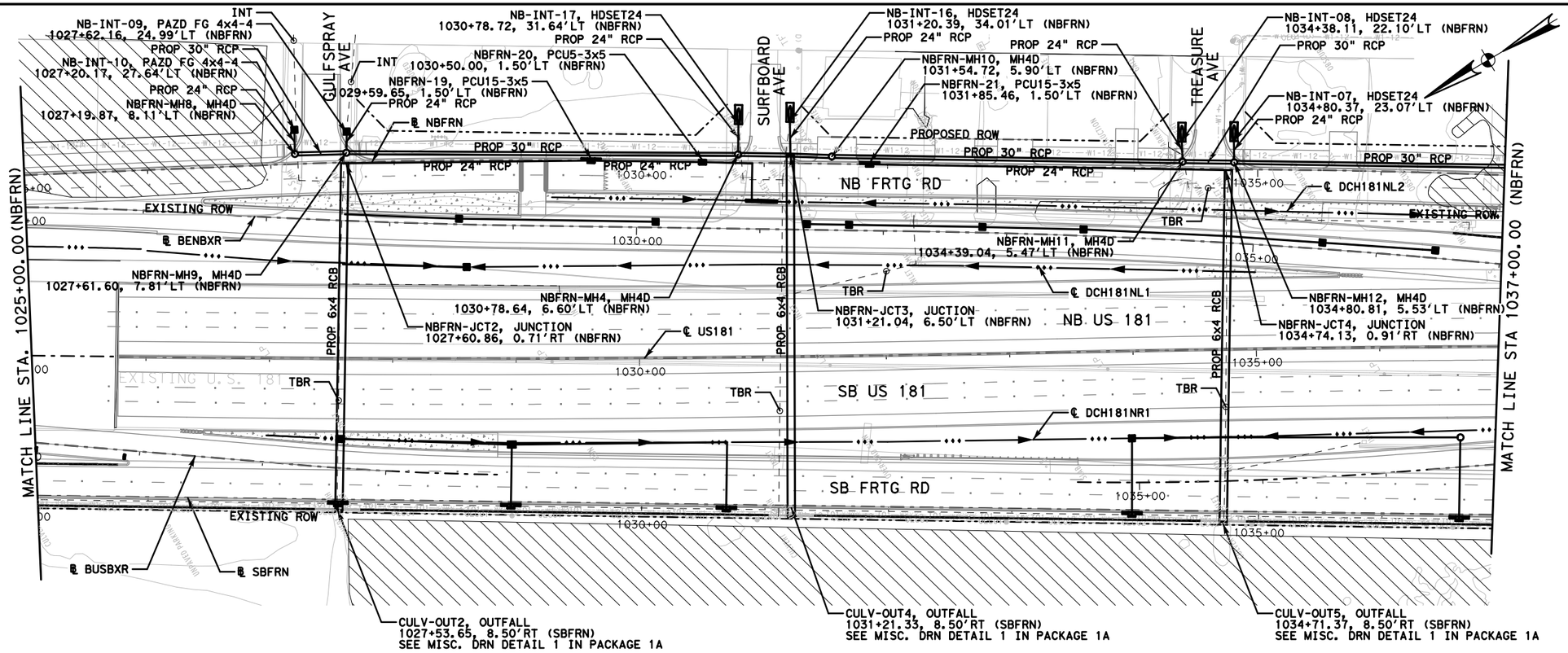

LEGEND

- 1.5" PFC
- RIPRAP
- DITCH
- PROPOSED MSE WALL
- EXISTING WETLANDS
- EXISTING STORM SEWER
- TBR — TO BE REMOVED
- INT — INTERCEPT EXISTING PIPE

NOTES:
1. DESIGN HGL WAS CALCULATED USING THE RINCON CHANNEL AVERAGE TIDEWATER ELEVATION OF +1.0' AS TAILWATER.
2. THE 10-YR TAILWATER (COSTAL FLOODING ELEVATION) IS +5.10'.
3. FOR DITCH PROFILE REFER TO PACKAGE 1A.

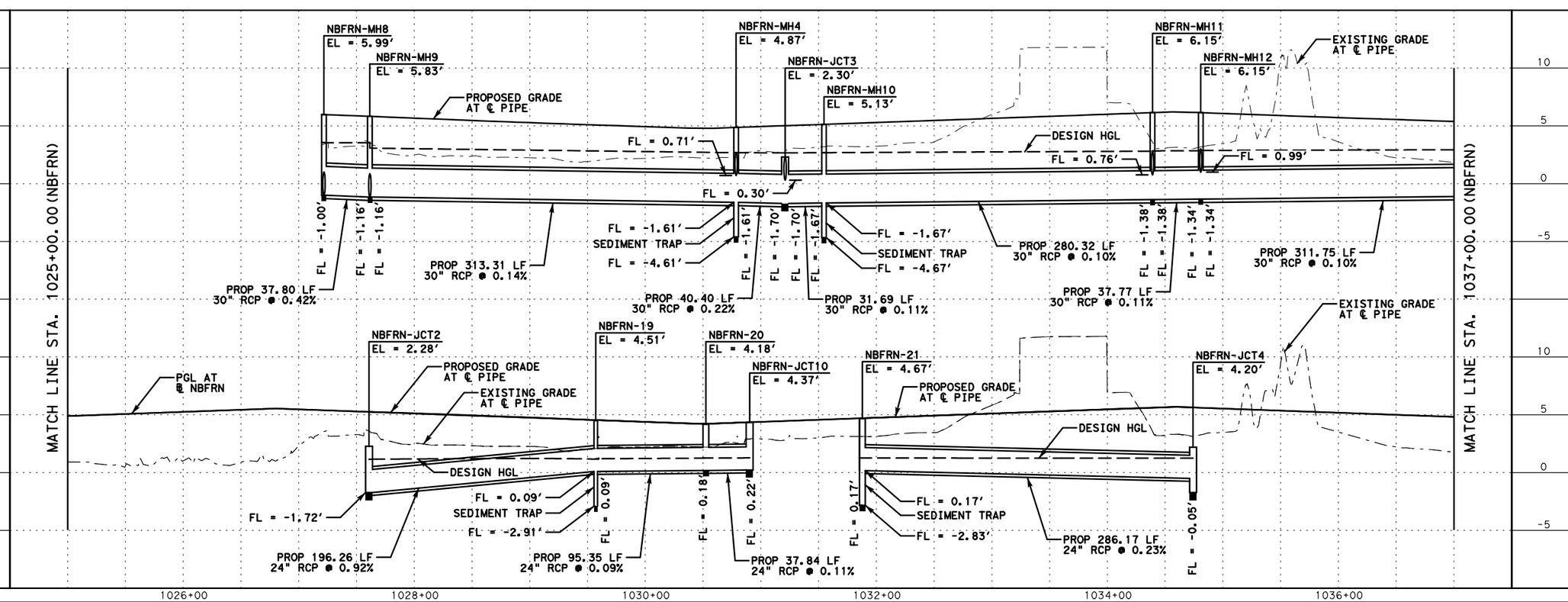

NO.	REVISIONS	BY	DATE

PRELIMINARY
FOR REVIEW ONLY
THESE DOCUMENTS ARE PRELIMINARY AND SUBJECT TO CHANGE. THEY ARE NOT INTENDED FOR CONSTRUCTION OR BIDDING. THEY WERE PREPARED BY, OR UNDER THE SUPERVISION OF:
Engineer: JACEK KWASNIEWSKI
P.E. No.: 95757
Date: 4/25/2017

ADVANCED STATUS

NOT FOR CONSTRUCTION

US 181 HARBOR BRIDGE

DRAINAGE PLAN & PROFILE (NBFRN) NORTH BOUND FRONTAGE ROAD

STA. 1025+00.00-STA. 1037+00
SCALE: 1"=100' H
1"=10' V

FLATIRON/DRAGADOS LLC

Stantec
Engineered by Stantec Consulting Services Inc.
Texas Registered Engineering Firm F-6324

Texas Department of Transportation
© 2017
SHEET 2 OF 5

FED. RD. DIV. NO.	FEDERAL AID PROJECT NO.		SHEET NO.
6	HP X597(1)		DRN 017
STATE	STATE DIST. NO.	COUNTY	
TEXAS	CRP	NUECES	
CONT.	SECT	JOB	HIGHWAY NO.
0101	06	095	US181

PROJECT
US 181 HARBOR BRIDGE

Checked by: Date:
Back-Checked by: Date:
Corrected by: Date:
Verified by: Date:
Calculations Check Confirmed
Drawing Checked Against Calculations
Prepared By: Date:
REVIEW PHASE
☐ Detail Check ☐ Internal Review ☐ Design Review ☐ TxDOT
☐ Drawing ☐ Report ☐ Other:

Plotted: 4/25/2017 3:09:47 PM
Pen Table: HBR_Pack1B_DRN.tbl
Design File: pw:\\stantec-sc-pw.bentley.com:stantec-sc-pw\Documents\01 Projects\HBR\Build Work\Design\08-Drainage\08.01-Sheets\08.01A-North Package\ALTERNATE-B\HBR_DRN_NBFRN_PP02.dgn

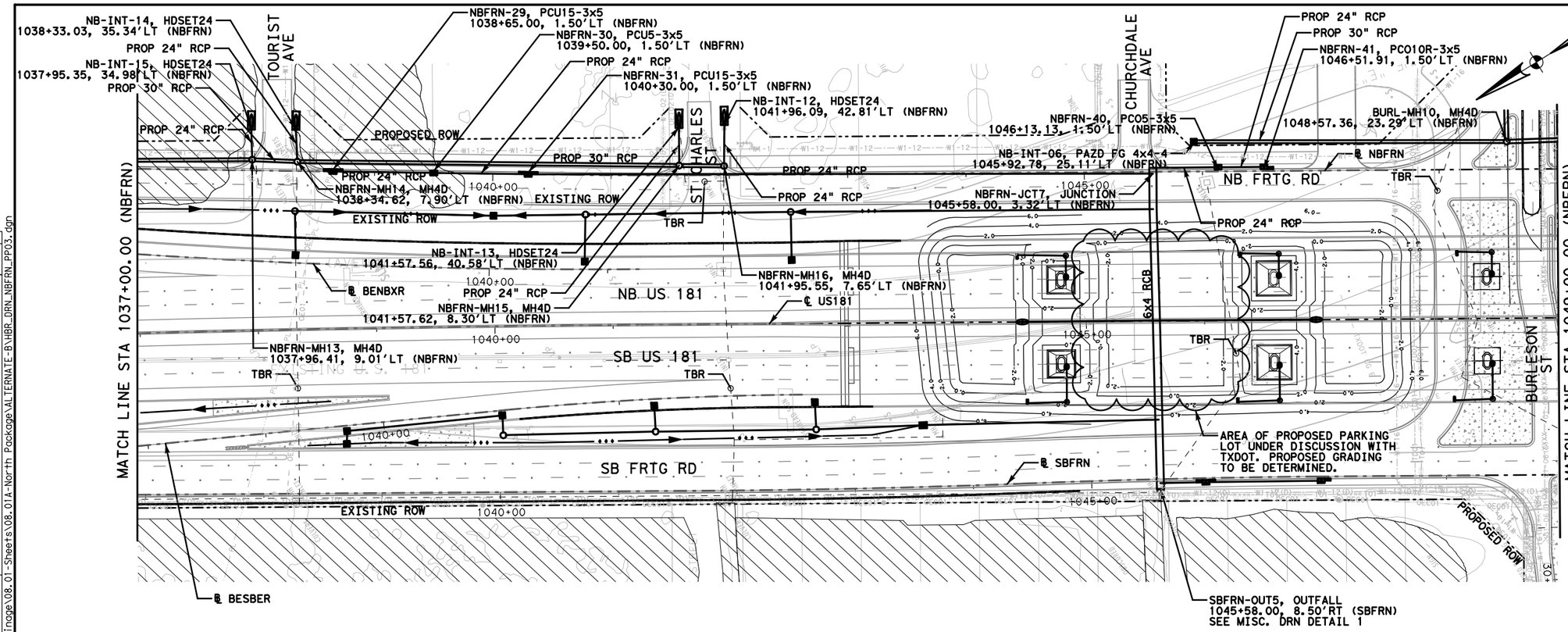

LEGEND

- 1.5" PFC
- RIPRAP
- DITCH
- PROPOSED MSE WALL
- EXISTING WETLANDS
- EXISTING STORM SEWER
- TBR — TO BE REMOVED
- INT — INTERCEPT EXISTING PIPE

NOTES:
1. DESIGN HGL WAS CALCULATED USING THE RINCON CHANNEL AVERAGE TIDEWATER ELEVATION OF +1.0' AS TAILWATER.
2. THE 10-YR TAILWATER (COSTAL FLOODING ELEVATION) IS +5.10'.
3. FOR DITCH PROFILE REFER TO PACKAGE 1A.

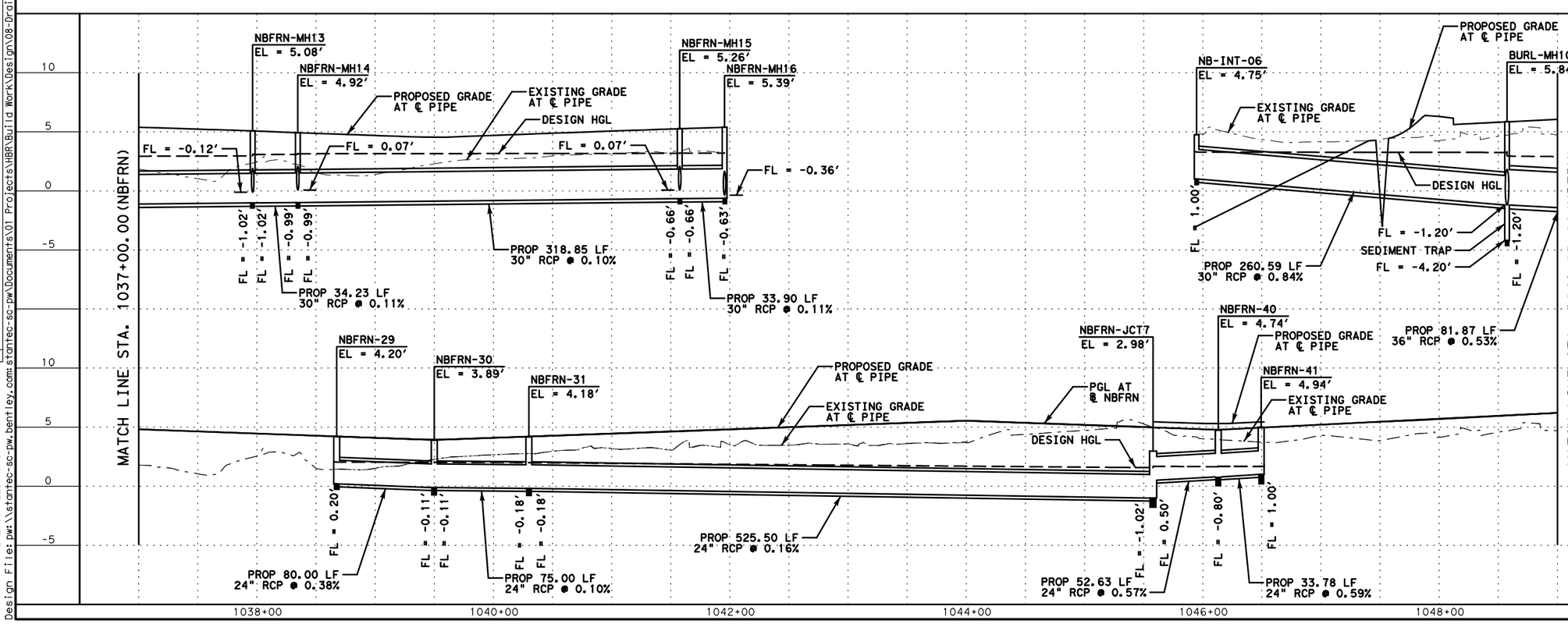

NO.	REVISIONS	BY	DATE

PRELIMINARY
FOR REVIEW ONLY
THESE DOCUMENTS ARE PRELIMINARY AND SUBJECT TO CHANGE. THEY ARE NOT INTENDED FOR CONSTRUCTION OR BIDDING. THEY WERE PREPARED BY, OR UNDER THE SUPERVISION OF:
Engineer: JACEK KWASNIEWSKI
P.E. No.: 95757
Date: 4/25/2017

ADVANCED STATUS

NOT FOR CONSTRUCTION

US 181 HARBOR BRIDGE

DRAINAGE PLAN & PROFILE (NBFRN) NORTH BOUND FRONTAGE ROAD

STA. 1037+00.0-STA. 1049+00.0
SCALE: 1"=100' H
1"=10' V

FLATIRON/DRAGADOS LLC

Stantec
Engineered by Stantec Consulting Services Inc.
Texas Registered Engineering Firm F-6324

Texas Department of Transportation
© 2017

FED. RD. DIV. NO.	FEDERAL AID PROJECT NO.		SHEET NO.
6	HP X597(1)		DRN 018
STATE	STATE DIST. NO.	COUNTY	
TEXAS	CRP	NUECES	
CONT.	SECT	JOB	HIGHWAY NO.
0101	06	095	US181

SHEET 3 OF 5

PROJECT
US 181 HARBOR BRIDGE

Checked by: Date:
Back-Checked by: Date:
Corrected by: Date:
Verified by: Date:
Calculations Check Confirmed
Drawing Checked Against Calculations
Prepared By: Date:
REVIEW PHASE: ☐ Detail Check ☐ Internal Review ☐ Design Review ☐ TxDOT ☐ Drawing ☐ Report ☐ Other:

Plotted: 4/25/2017 3:09:53 PM
Pen Table: HBR_Pack1B_DRN.tbl
Design File: pw:\\stantec-sc-pw.bentley.com:stantec-sc-pw\Documents\01 Projects\HBR\Build Work\Design\08-Drainage\08.01-Sheets\08.01A-North Package\ALTERNATE-B\HBR_DRN_NBFRN_PP03.dgn

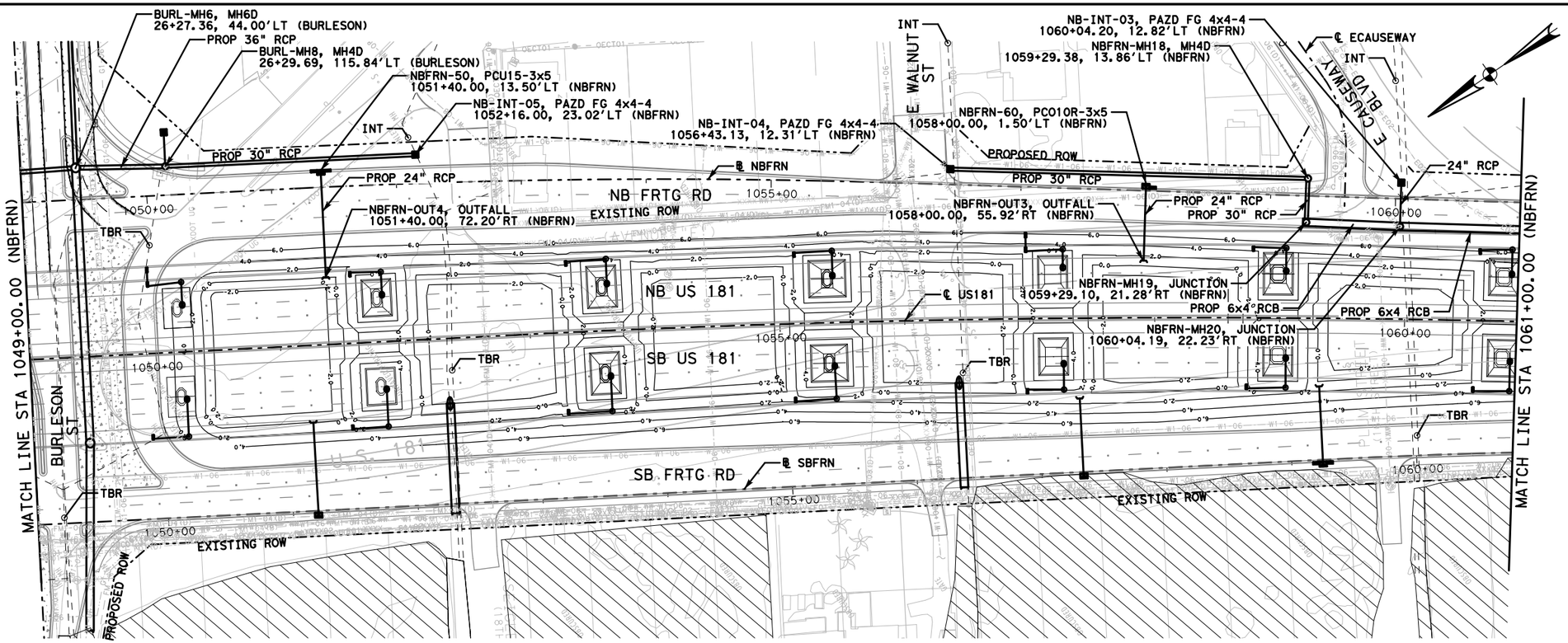

LEGEND

- 1.5" PFC
- RIPRAP
- DITCH
- PROPOSED MSE WALL
- EXISTING WETLANDS
- EXISTING STORM SEWER
- TBR — TO BE REMOVED
- INT — INTERCEPT EXISTING PIPE

NOTES:
1. DESIGN HGL WAS CALCULATED USING THE RINCON CHANNEL AVERAGE TIDEWATER ELEVATION OF +1.0' AS TAILWATER.
2. THE 10-YR TAILWATER (COSTAL FLOODING ELEVATION) IS +5.10'.

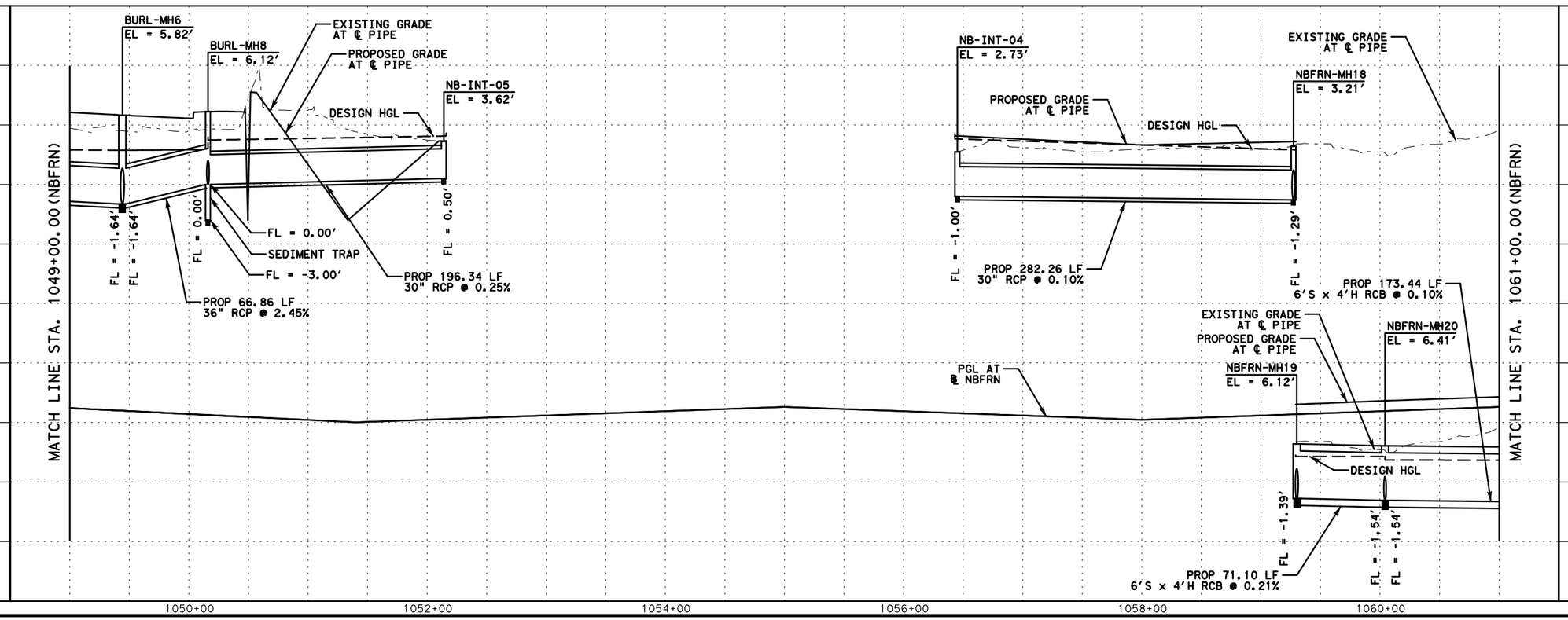

NO.	REVISIONS	BY	DATE

PRELIMINARY
FOR REVIEW ONLY
THESE DOCUMENTS ARE PRELIMINARY AND SUBJECT TO CHANGE. THEY ARE NOT INTENDED FOR CONSTRUCTION OR BIDDING. THEY WERE PREPARED BY, OR UNDER THE SUPERVISION OF:
Engineer: JACEK KWASNIEWSKI
P.E. No.: 95757
Date: 4/25/2017

ADVANCED STATUS

NOT FOR CONSTRUCTION

US 181 HARBOR BRIDGE

DRAINAGE PLAN & PROFILE (NBFRN) NORTH BOUND FRONTAGE ROAD

STA. 1049+00.0-STA. 1061+00.0
SCALE: 1"=100'H
1"=10' V

FLATIRON/DRAGADOS LLC

Stantec
Engineered by Stantec Consulting Services Inc.
Texas Registered Engineering Firm F-6324

Texas Department of Transportation
© 2017
SHEET 4 OF 5

FED. RD. DIV. NO.	FEDERAL AID PROJECT NO.		SHEET NO.
6	HP X597(1)		DRN 019
STATE	STATE DIST. NO.	COUNTY	
TEXAS	CRP	NUECES	
CONT.	SECT	JOB	HIGHWAY NO.
0101	06	095	US181

PROJECT
US 181 HARBOR BRIDGE

Checked by: Date:
Back-Checked by: Date:
Corrected by: Date:
Verified by: Date:

☐ TxDOT
☐ Detail Check ☐ Internal Review ☐ Design Review
☐ Drawing ☐ Report ☐ Other:
Prepared By: Date:
☐ Drawing Checked Against Calculations ☐ Calculations Check Confirmed
REVIEW PHASE

Plotted: 4/25/2017 3:09:59 PM
Pen Table: HBR_Pack1B_DRN.tbl
Design File: pw:\\stantec-sc-pw.bentley.com:stantec-sc-pw\Documents\01 Projects\HBR\Build Work\Design\08-Drainage\08.01-Image\08.01-Sheets\08.01A-North Package\ALTERNATE-B\HBR_DRN_NBFRN_PP04.dgn

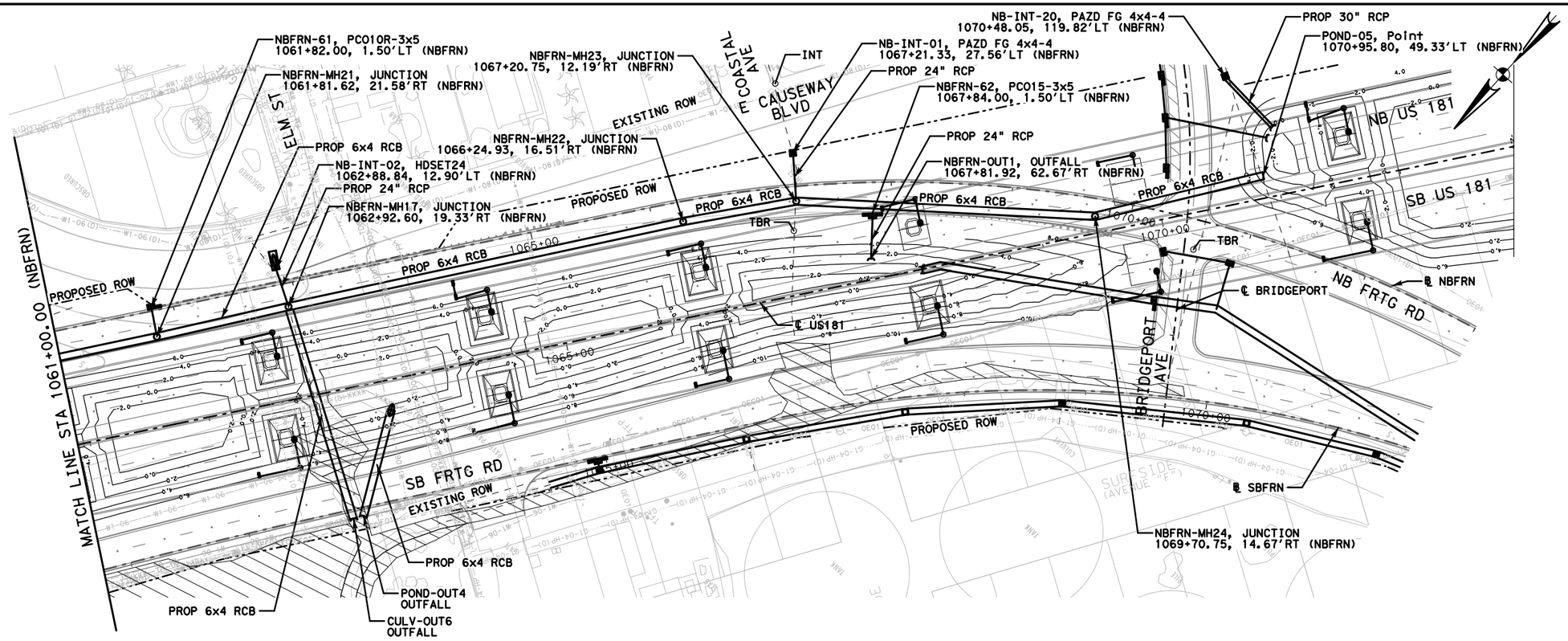

LEGEND

- 1.5" PFC
- RIPRAP
- DITCH
- PROPOSED MSE WALL
- EXISTING WETLANDS
- EXISTING STORM SEWER
- TBR — TO BE REMOVED
- INT — INTERCEPT EXISTING PIPE

NOTES:
1. DESIGN HGL WAS CALCULATED USING THE RINCON CHANNEL AVERAGE TIDEWATER ELEVATION OF +1.0' AS TAILWATER.
2. THE 10-YR TAILWATER (COSTAL FLOODING ELEVATION) IS +5.10'

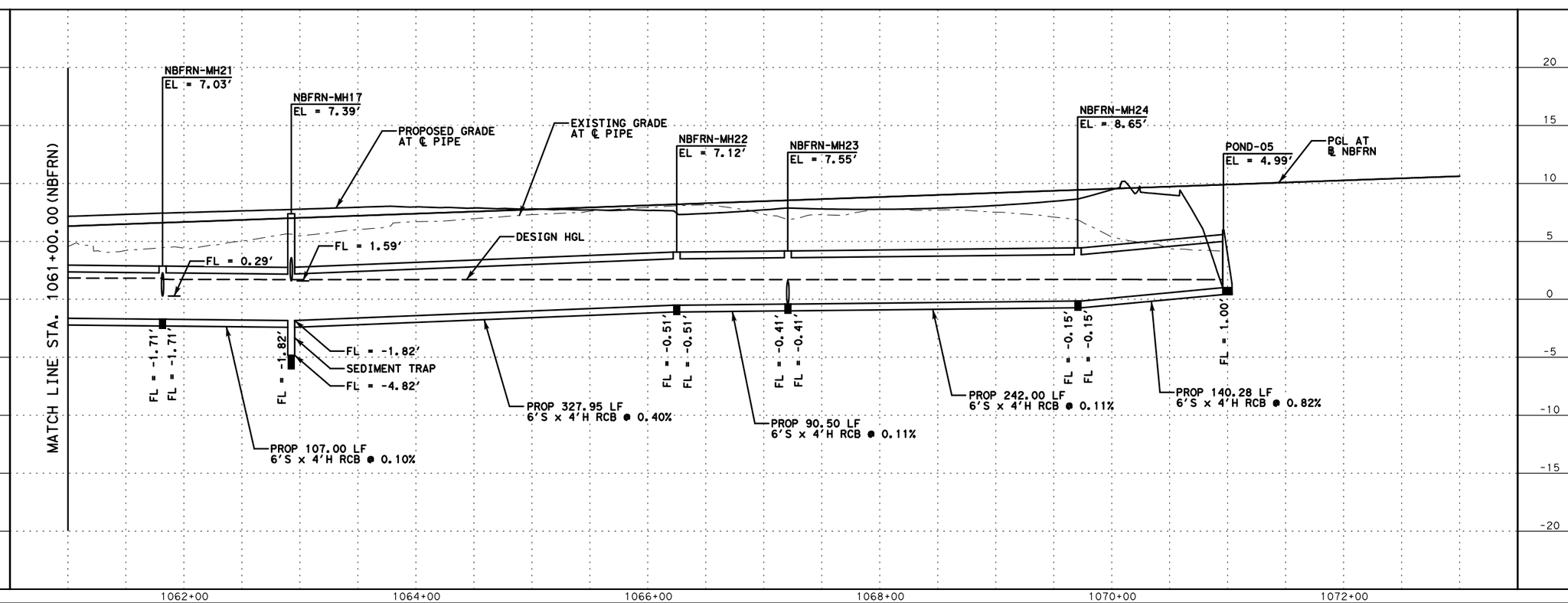

NO.	REVISIONS	BY	DATE

PRELIMINARY
FOR REVIEW ONLY
THESE DOCUMENTS ARE PRELIMINARY AND SUBJECT TO CHANGE. THEY ARE NOT INTENDED FOR CONSTRUCTION OR BIDDING. THEY WERE PREPARED BY, OR UNDER THE SUPERVISION OF:
Engineer: JACEK KWASNIEWSKI
P.E. No.: 95757
Date: 4/25/2017

ADVANCED STATUS

NOT FOR CONSTRUCTION

US 181 HARBOR BRIDGE

DRAINAGE PLAN & PROFILE (NBFRN) NORTH BOUND FRONTAGE ROAD

STA. 1061+00.0-STA. 1073+00.0
SCALE: 1"=100' H
1"=10' V

FLATIRON/DRAGADOS LLC

Stantec
Engineered by Stantec Consulting Services Inc.
Texas Registered Engineering Firm F-6324

Texas Department of Transportation
© 2017
SHEET 5 OF 5

FED. RD. DIV. NO.	FEDERAL AID PROJECT NO.		SHEET NO.
6	HP X597(1)		DRN 020
STATE	STATE DIST. NO.	COUNTY	
TEXAS	CRP	NUECES	
CONT.	SECT	JOB	HIGHWAY NO.
0101	06	095	US181

PROJECT
US 181 HARBOR BRIDGE

Checked by: Date:
Back-Checked by: Date:
Corrected by: Date:
Verified by: Date:

☐ Detail Check ☐ Internal Review ☐ Design Review ☐ TxDOT
☐ Drawing ☐ Report ☐ Other:
Prepared By: Date:
☐ Drawing Checked Against Calculations ☐ Calculations Check Confirmed
REVIEW PHASE

Plotted: 4/25/2017 3:10:06 PM
Pen Table: HBR_Packl8_DRN.tbl
Design File: pw:\\stantec-sc-pw.bentley.com:stantec-sc-pw\Documents\01 Projects\HBR\Build Work\Design\08-Drainage\08.01-Sheets\08.01A-North Package\ALTERNATE-B\HBR_DRN_NBFRN_PP05.dgn

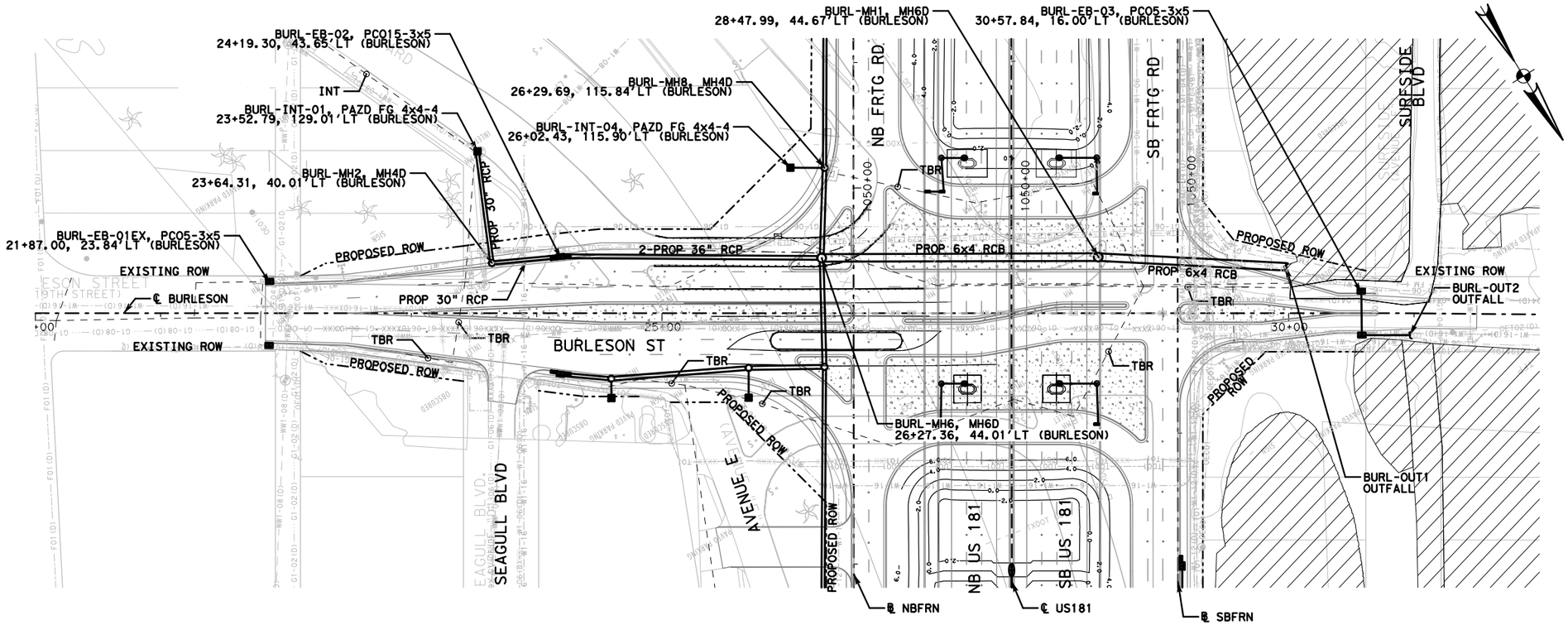

LEGEND

- 1.5" PFC
- RIPRAP
- DITCH
- PROPOSED MSE WALL
- EXISTING WETLANDS
- EXISTING STORM SEWER
- TBR — TO BE REMOVED
- INT — INTERCEPT EXISTING PIPE

NOTES:
1. DESIGN HGL WAS CALCULATED USING THE RINCON CHANNEL AVERAGE TIDEWATER ELEVATION OF +1.0' AS TAILWATER.
2. THE 10-YR TAILWATER (COSTAL FLOODING ELEVATION) IS +5.10'.

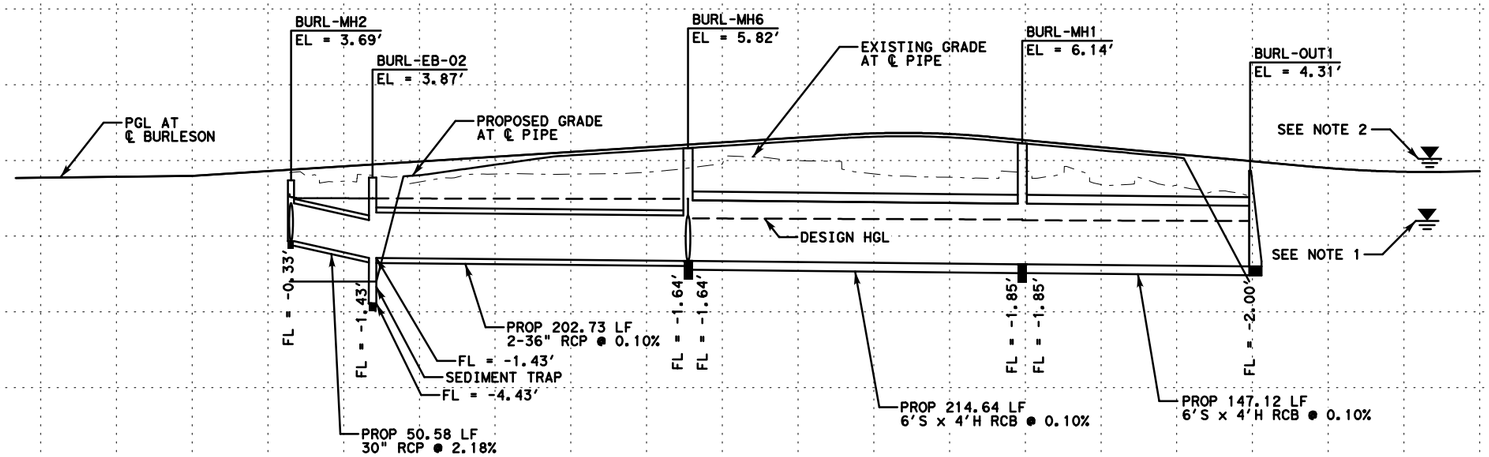

NO.	REVISIONS	BY	DATE

PRELIMINARY
FOR REVIEW ONLY
THESE DOCUMENTS ARE PRELIMINARY AND SUBJECT TO CHANGE. THEY ARE NOT INTENDED FOR CONSTRUCTION OR BIDDING. THEY WERE PREPARED BY, OR UNDER THE SUPERVISION OF:
Engineer: JACEK KWASNIEWSKI
P.E. No.: 95757
Date: 4/25/2017

ADVANCED STATUS

NOT FOR CONSTRUCTION

US 181 HARBOR BRIDGE

DRAINAGE PLAN & PROFILE (BURLESON) EAST BOUND

STA. 20+00.00-STA. 32+00.00
SCALE: 1"=100' H
1"=10' V

FLATIRON/DRAGADOS LLC

Stantec
Engineered by Stantec Consulting Services Inc.
Texas Registered Engineering Firm F-6324

Texas Department of Transportation
© 2017
SHEET 1 OF 1

FED. RD. DIV. NO.	FEDERAL AID PROJECT NO.		SHEET NO.
6	HP X597(1)		DRN 021
STATE	STATE DIST. NO.	COUNTY	
TEXAS	CRP	NUECES	
CONT.	SECT	JOB	HIGHWAY NO.
0101	06	095	US181

PROJECT
US 181 HARBOR BRIDGE

Checked by: Date:
Back-Checked by: Date:
Corrected by: Date:
Verified by: Date:

☐ TxDOT
☐ Detail Check ☐ Internal Review ☐ Design Review
☐ Drawing ☐ Report ☐ Other:
Prepared By: Date:
☐ Drawing Checked Against Calculations ☐ Calculations Check Confirmed
REVIEW PHASE

Plotted: 4/25/2017 3:10:13 PM
Pen Table: HBR_Packt8_DRN.tbl
Design File: pw:\\stantec-sc-pw.bentley.com:stantec-sc-pw\Documents\01 Projects\HBR\Build Work\Design\08-Drainage\08.01-Sheets\08.01A-North Package\ALTERNATE-B\HBR_DRN_BURLESON_EB_PP01.dgn

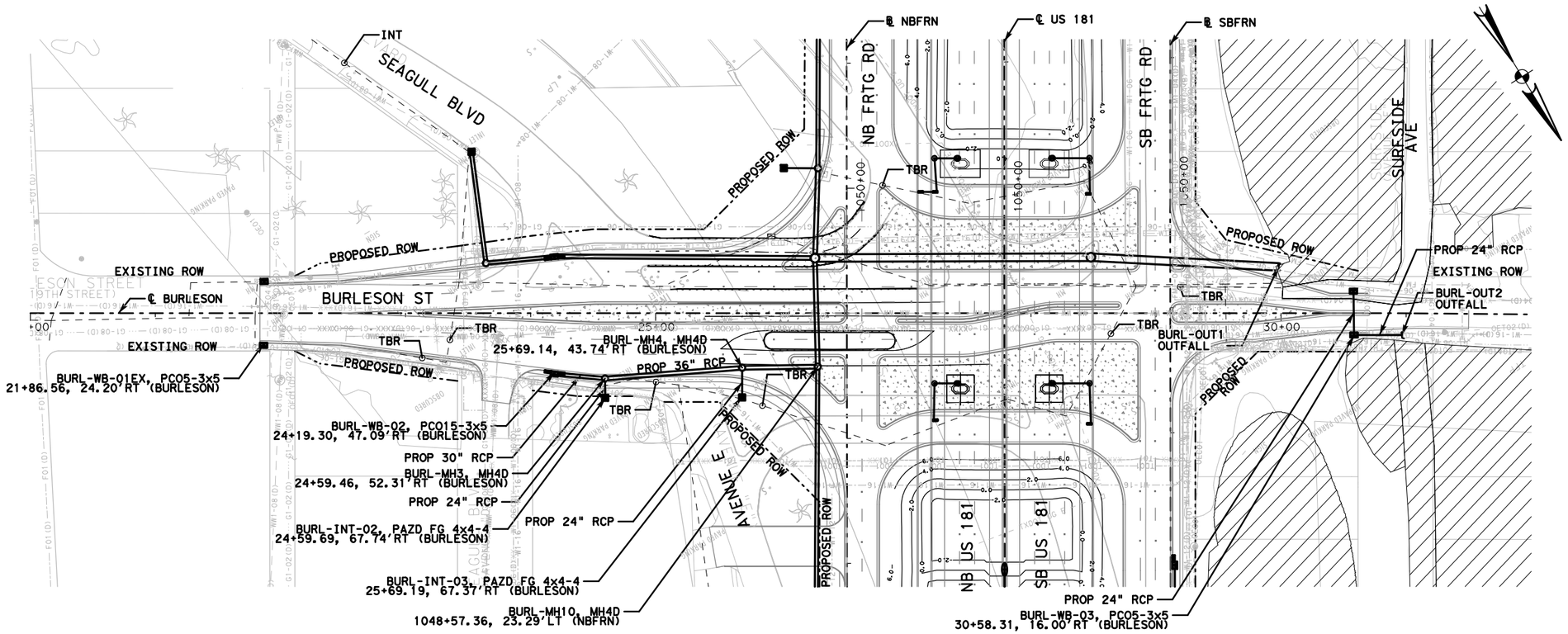

LEGEND

- 1.5" PFC
- RIPRAP
- DITCH
- PROPOSED MSE WALL
- EXISTING WETLANDS
- EXISTING STORM SEWER
- TBR — TO BE REMOVED
- INT — INTERCEPT EXISTING PIPE

NOTES:
1. DESIGN HGL WAS CALCULATED USING THE RINCON CHANNEL AVERAGE TIDEWATER ELEVATION OF +1.0' AS TAILWATER.
2. THE 10-YR TAILWATER (COSTAL FLOODING ELEVATION) IS +5.10'.

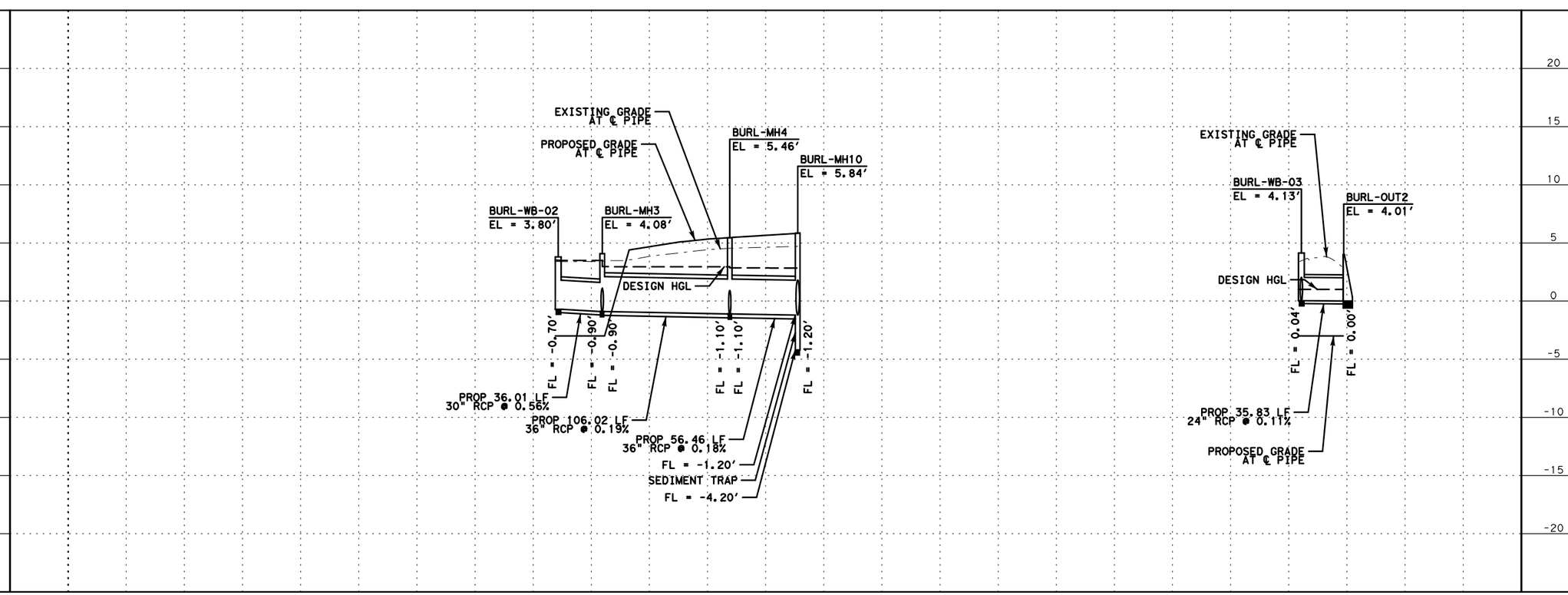

NO.	REVISIONS	BY	DATE

PRELIMINARY
FOR REVIEW ONLY
THESE DOCUMENTS ARE PRELIMINARY AND SUBJECT TO CHANGE. THEY ARE NOT INTENDED FOR CONSTRUCTION OR BIDDING. THEY WERE PREPARED BY, OR UNDER THE SUPERVISION OF:
Engineer: JACEK KWASNIEWSKI
P.E. No.: 95757
Date: 4/25/2017

ADVANCED STATUS

NOT FOR CONSTRUCTION

US 181 HARBOR BRIDGE

DRAINAGE PLAN & PROFILE (BURLESON) WEST BOUND

STA. 20+00.00-STA. 32+00.00
SCALE: 1"=100' H
1"=10' V

FLATIRON/DRAGADOS LLC

Stantec
Engineered by Stantec Consulting Services Inc.
Texas Registered Engineering Firm F-6324

Texas Department of Transportation
© 2017
SHEET 1 OF 1

FED. RD. DIV. NO.	FEDERAL AID PROJECT NO.		SHEET NO.
6	HP X597(1)		DRN 022
STATE	STATE DIST. NO.	COUNTY	
TEXAS	CRP	NUECES	
CONT.	SECT	JOB	HIGHWAY NO.
0101	06	095	US181

PROJECT
US 181 HARBOR BRIDGE

Checked by: Date:
Back-Checked by: Date:
Corrected by: Date:
Verified by: Date:

☐ Detail Check ☐ Internal Review ☐ Design Review ☐ TxDOT
☐ Drawing ☐ Report ☐ Other:
Prepared By: Date:
☐ Drawing Checked Against Calculations ☐ Calculations Check Confirmed
REVIEW PHASE

Plotted: 4/25/2017 3:10:19 PM
Pen Table: HBR_Packl8_DRN.tbl
Design File: pw:\\stantec-sc-pw.bentley.com:stantec-sc-pw\Documents\01 Projects\HBR\Build Work\Design\08-Drainage\08.01-Sheets\08.01A-North Package\ALTERNATE-B\HBR_DRN_BURLESON_WB_PP01.dgn

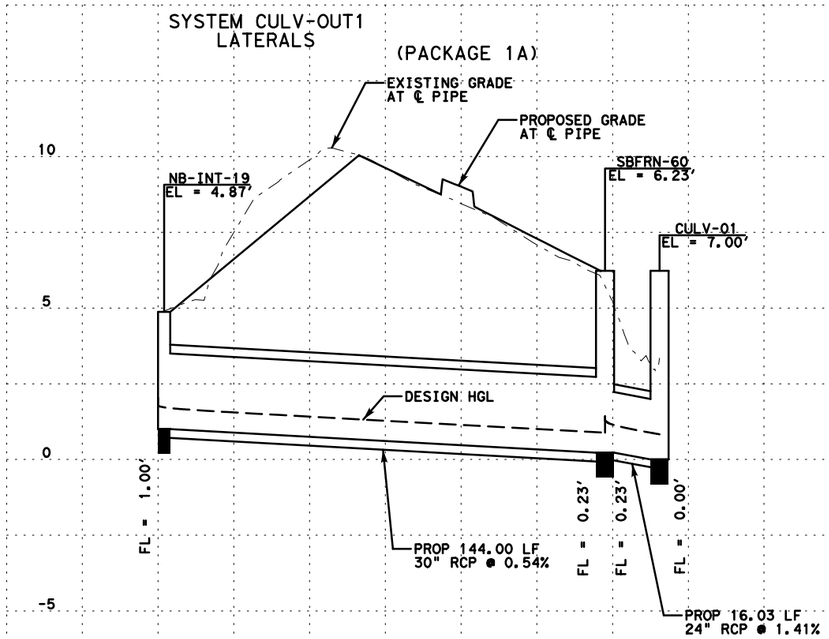

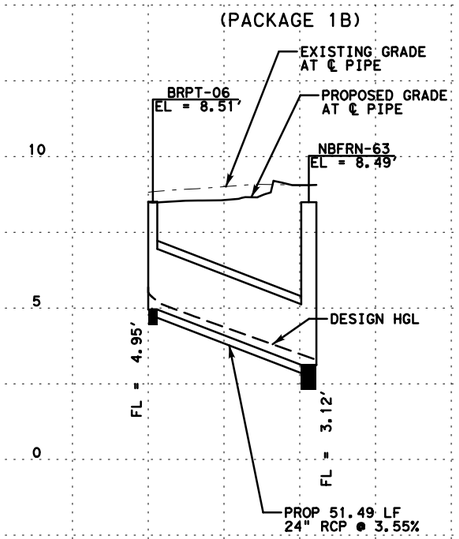

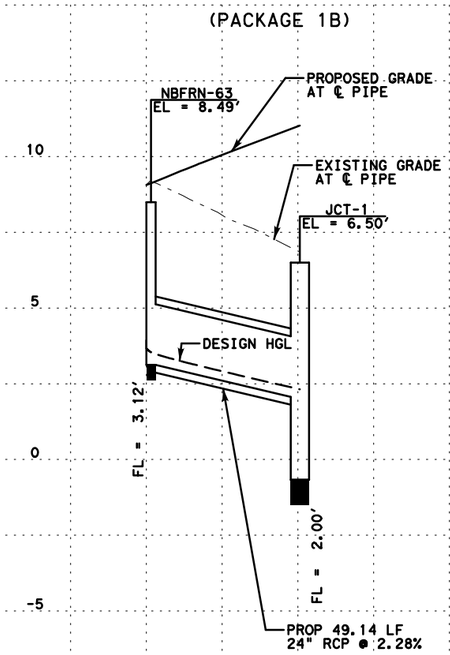

NOTES:
1. DESIGN HGL WAS CALCULATED USING THE RINCON CHANNEL AVERAGE TIDEWATER ELEVATION OF +1.0' AS TAILWATER.
2. THE 10-YR TAILWATER (COSTAL FLOODING ELEVATION) IS +5.10'.
3. REFER TO CORRESPONDING SUBMITTAL PACKAGE FOR PLAN SHEETS.

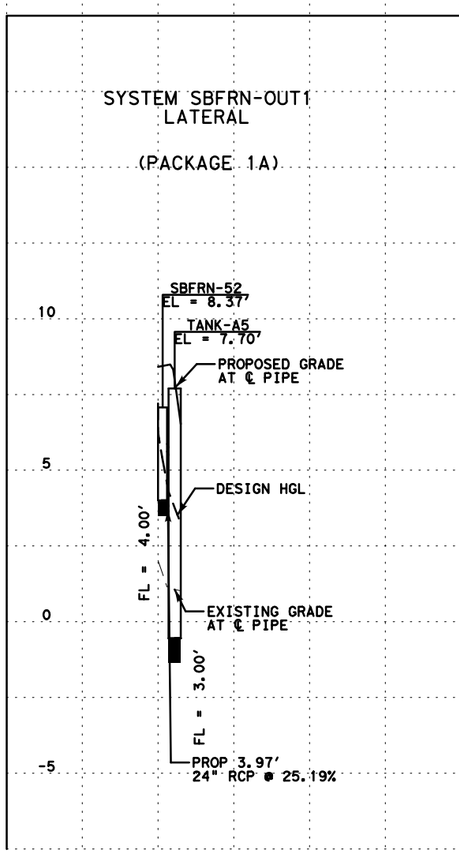

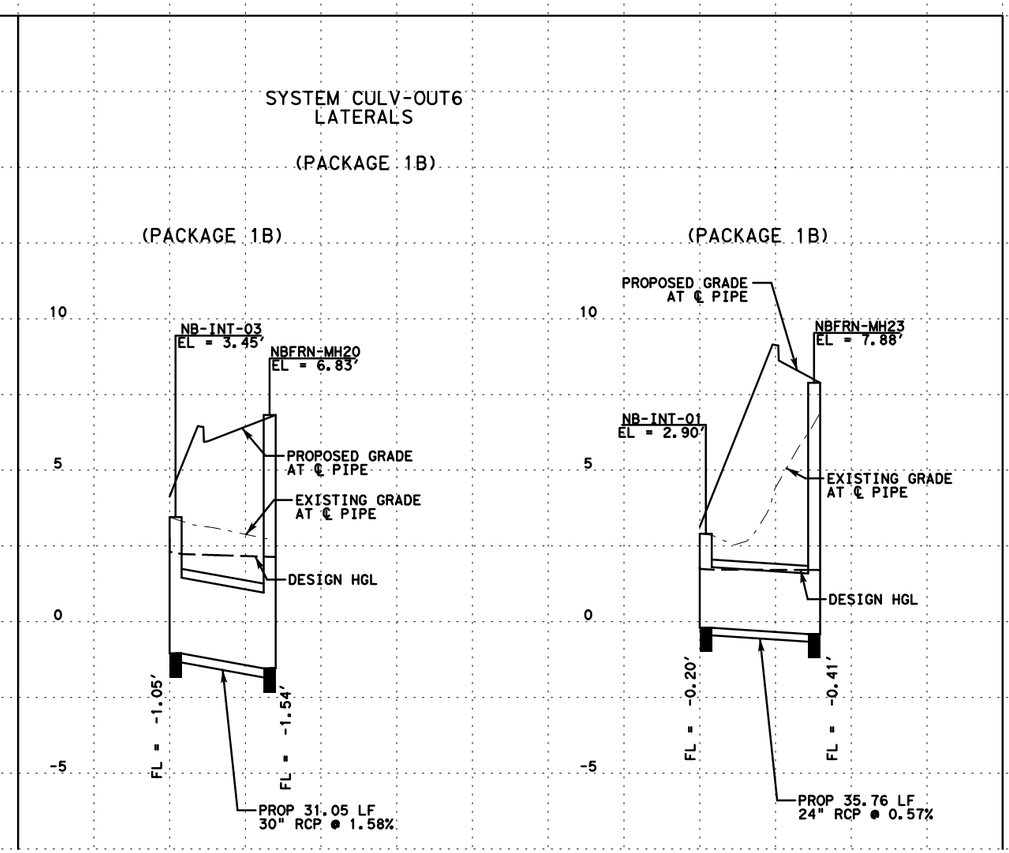

NO.	REVISIONS	BY	DATE

PRELIMINARY
FOR REVIEW ONLY
THESE DOCUMENTS ARE PRELIMINARY AND SUBJECT TO CHANGE. THEY ARE NOT INTENDED FOR CONSTRUCTION OR BIDDING. THEY WERE PREPARED BY, OR UNDER THE SUPERVISION OF:
Engineer: JACEK KWASNIEWSKI
P.E. No.: 95757
Date: 4/25/2017

RELEASE FOR CONSTRUCTION

US 181 HARBOR BRIDGE

DRAINAGE PROFILES & LATERALS

SCALE: 1"=50' H
1"=10' V

FLATIRON/DRAGADOS LLC

Stantec
Engineered by Stantec Consulting Services Inc.
Texas Registered Engineering Firm F-6324

Texas Department of Transportation
© 2017
SHEET 1 OF 9

FED. RD. DIV. NO.	FEDERAL AID PROJECT NO.		SHEET NO.
6	HP X597(1)		DRN 023
STATE	STATE DIST. NO.	COUNTY	
TEXAS	CRP	NUECES	
CONT.	SECT	JOB	HIGHWAY NO.
0101	06	095	US181

PROJECT
US 181 HARBOR BRIDGE

Checked by: Date:
Back-Checked by: Date:
Corrected by: Date:
Verified by: Date:

☐ Detail Check ☐ Internal Review ☐ Design Review ☐ TxDOT
☐ Drawing ☐ Report ☐ Other:
Prepared By: Date:
☐ Drawing Checked Against Calculations ☐ Calculations Check Confirmed
REVIEW PHASE

Plotted: 4/25/2017 3:10:23 PM
Pen Table: HBR_Pack1B_DRN.tbl
Design File: pw:\\stantec-sc-pw.bentley.com:stantec-sc-pw\Documents\01 Projects\HBR\Build Work\Design\08-Drainage\08.01-Sheets\08.01A-North Package\ALTERNATE-B\HBR_DRN_LATERALS_LT01.dgn

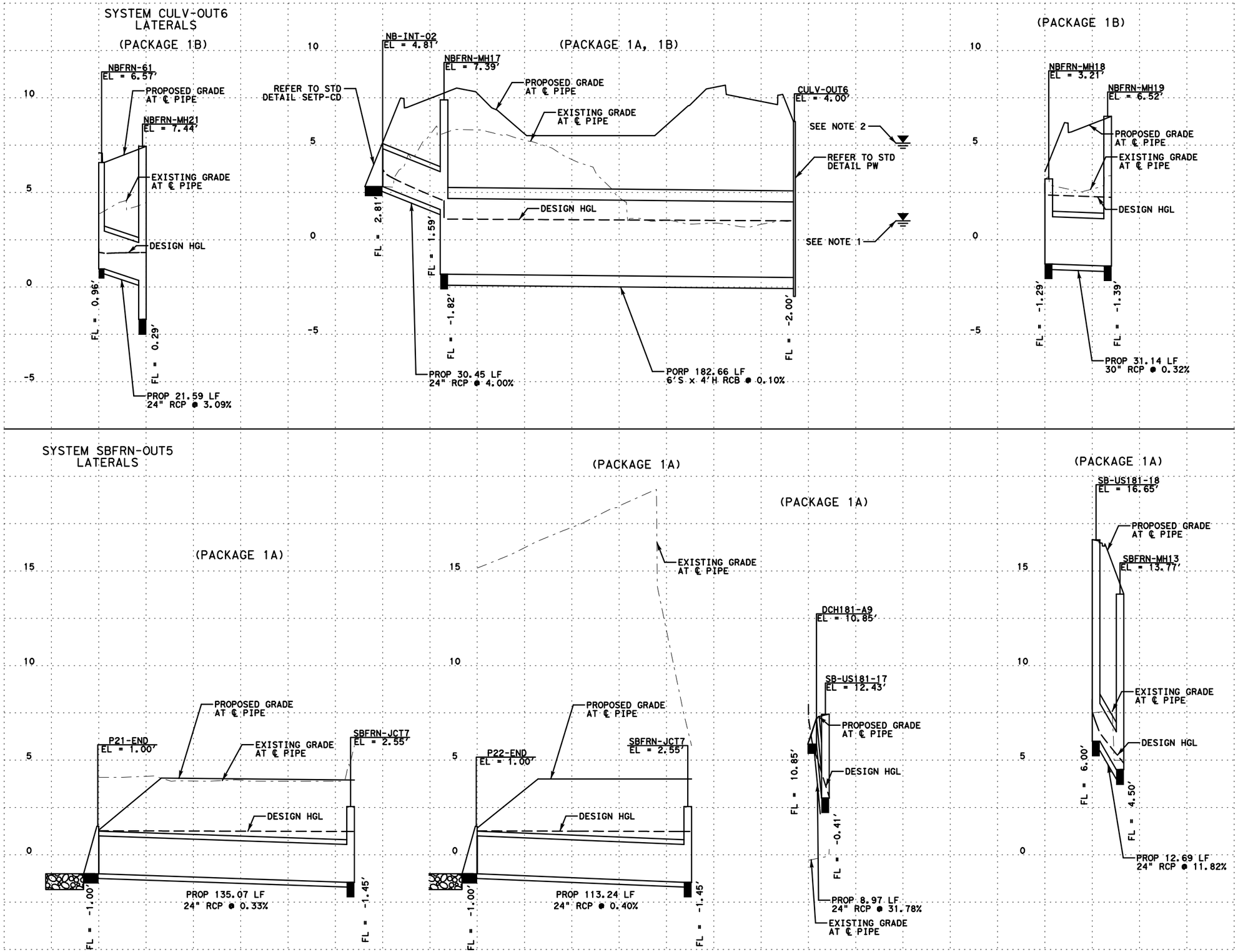

NOTES:
1. DESIGN HGL WAS CALCULATED USING THE RINCON CHANNEL AVERAGE TIDEWATER ELEVATION OF +1.0' AS TAILWATER.
2. THE 10-YR TAILWATER (COSTAL FLOODING ELEVATION) IS +5.10'.
3. REFER TO CORRESPONDING SUBMITTAL PACKAGE FOR PLAN SHEETS.

NO.	REVISIONS	BY	DATE

PRELIMINARY
FOR REVIEW ONLY
THESE DOCUMENTS ARE PRELIMINARY AND SUBJECT TO CHANGE. THEY ARE NOT INTENDED FOR CONSTRUCTION OR BIDDING. THEY WERE PREPARED BY, OR UNDER THE SUPERVISION OF:
Engineer: JACEK KWASNIEWSKI
P.E. No.: 95757
Date: 4/25/2017

RELEASE FOR CONSTRUCTION

US 181 HARBOR BRIDGE

DRAINAGE PROFILES & LATERALS

SCALE: 1"=50' H
1"=10' V

FLATIRON/DRAGADOS LLC

Stantec
Engineered by Stantec Consulting Services Inc.
Texas Registered Engineering Firm F-6324

Texas Department of Transportation
© 2017

SHEET 2 OF 9

FED. RD. DIV. NO.	FEDERAL AID PROJECT NO.		SHEET NO.
6	HP X597(1)		DRN 024
STATE	STATE DIST. NO.	COUNTY	
TEXAS	CRP	NUECES	
CONT.	SECT	JOB	HIGHWAY NO.
0101	06	095	US181

PROJECT
US 181 HARBOR BRIDGE

Checked by: Date:
Back-Checked by: Date:
Corrected by: Date:
Verified by: Date:

REVIEW PHASE
☐ Detail Check ☐ Internal Review ☐ Design Review ☐ TxDOT
☐ Drawing ☐ Report ☐ Other:
Prepared By: Date:
☐ Drawing Checked Against Calculations ☐ Calculations Check Confirmed

Plotted: 4/25/2017 3:10:27 PM
Pen Table: HBR_Pack1B_DRN.tbl
Design File: pw:\\stantec-sc-pw.bentley.com:stantec-sc-pw\Documents\01 Projects\HBR\Build Work\Design\08-Drainage\08.01-Sheets\08.01A-North Package\ALTERNATE-B\HBR_DRN_LATERALS_LT02.dgn

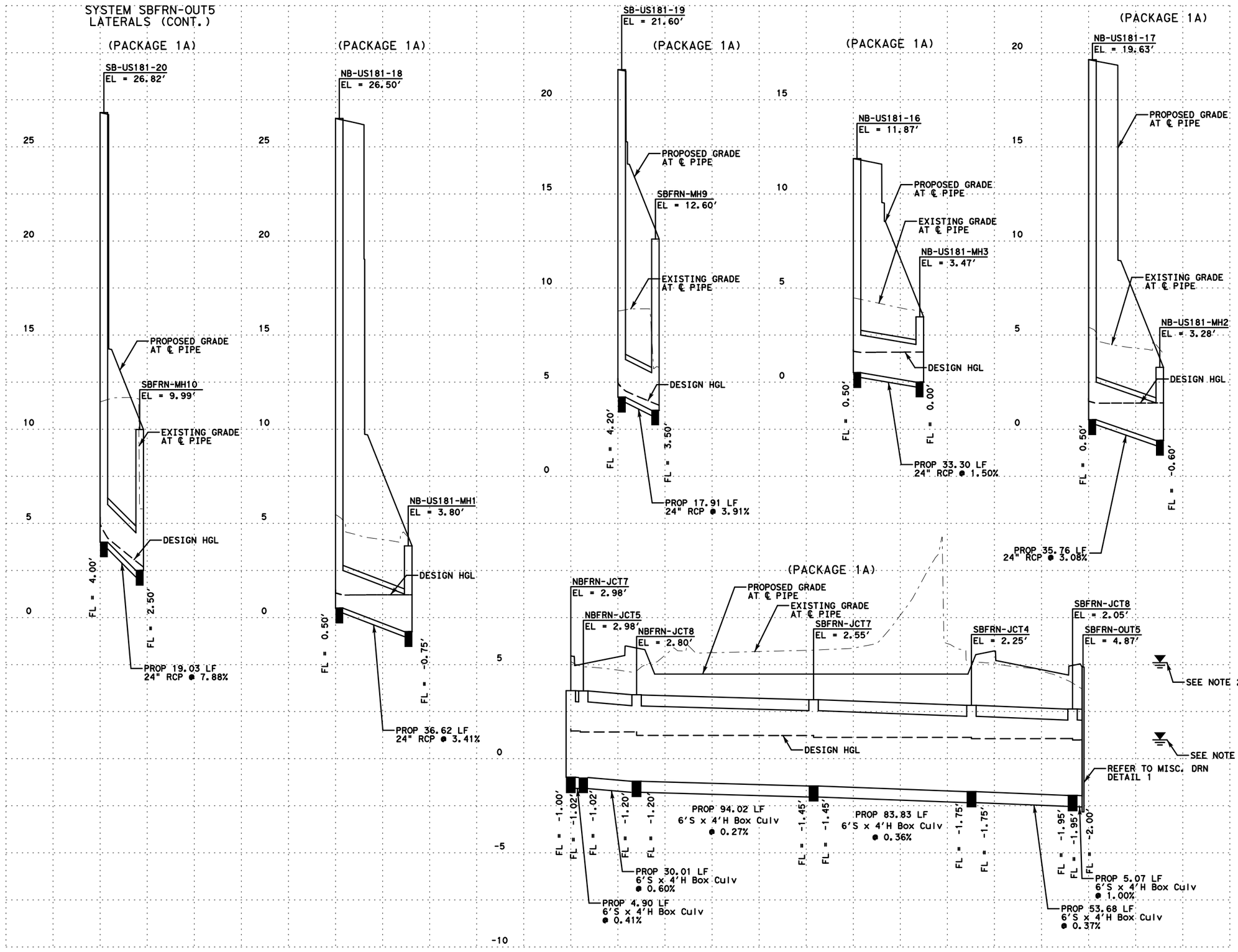

NOTES:
1. DESIGN HGL WAS CALCULATED USING THE RINCON CHANNEL AVERAGE TIDEWATER ELEVATION OF +1.0' AS TAILWATER.
2. THE 10-YR TAILWATER (COSTAL FLOODING ELEVATION) IS +5.10'.
3. REFER TO CORRESPONDING SUBMITTAL PACKAGE FOR PLAN SHEETS.

NO.	REVISIONS	BY	DATE

PRELIMINARY
FOR REVIEW ONLY
THESE DOCUMENTS ARE PRELIMINARY AND SUBJECT TO CHANGE. THEY ARE NOT INTENDED FOR CONSTRUCTION OR BIDDING. THEY WERE PREPARED BY, OR UNDER THE SUPERVISION OF:
Engineer: JACEK KWASNIEWSKI
P.E. No.: 95757
Date: 4/25/2017

RELEASE FOR CONSTRUCTION

US 181 HARBOR BRIDGE

DRAINAGE PROFILES & LATERALS

SCALE: 1"=50' H
1"=10' V

FLATIRON/DRAGADOS LLC

Stantec
Engineered by Stantec Consulting Services Inc.
Texas Registered Engineering Firm F-6324

Texas Department of Transportation
© 2017
SHEET 3 OF 9

FED. RD. DIV. NO.	FEDERAL AID PROJECT NO.		SHEET NO.
6	HP X597(1)		DRN 025
STATE	STATE DIST. NO.	COUNTY	
TEXAS	CRP	NUECES	
CONT.	SECT	JOB	HIGHWAY NO.
0101	06	095	US181

PROJECT
US 181 HARBOR BRIDGE

Checked by: Date:
Back-Checked by: Date:
Corrected by: Date:
Verified by: Date:

☐ TxDOT
☐ Detail Check ☐ Internal Review ☐ Design Review
☐ Drawing ☐ Report ☐ Other:
Prepared By: Date:
☐ Drawing Checked Against Calculations ☐ Calculations Check Confirmed
REVIEW PHASE

Plotted: 4/25/2017 3:10:31 PM
Pen Table: HBR_Pack1B_DRN.tbl
Design File: pw:\\stantec-sc-pw.bentley.com:stantec-sc-pw\Documents\01 Projects\HBR\Build Work\Design\08-Drainage\08.01-Sheets\08.01A-North Package\ALTERNATE-B\HBR_DRN_LATERALS_LT03.dgn

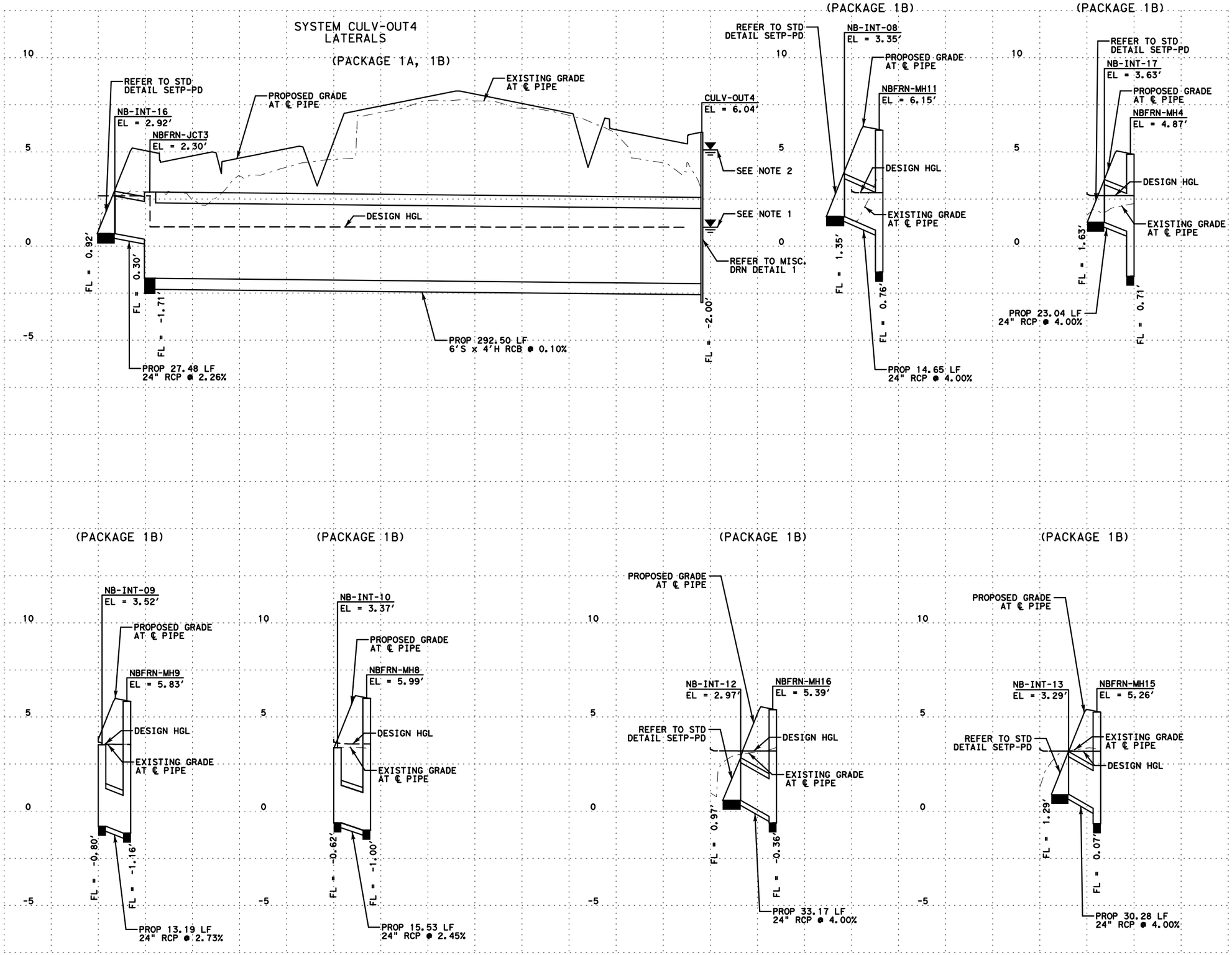

NOTES:
1. DESIGN HGL WAS CALCULATED USING THE RINCON CHANNEL AVERAGE TIDEWATER ELEVATION OF +1.0' AS TAILWATER.
2. THE 10-YR TAILWATER (COSTAL FLOODING ELEVATION) IS +5.10'.
3. REFER TO CORRESPONDING SUBMITTAL PACKAGE FOR PLAN SHEETS.

NO.	REVISIONS	BY	DATE

PRELIMINARY
FOR REVIEW ONLY
THESE DOCUMENTS ARE PRELIMINARY AND SUBJECT TO CHANGE. THEY ARE NOT INTENDED FOR CONSTRUCTION OR BIDDING. THEY WERE PREPARED BY, OR UNDER THE SUPERVISION OF:
Engineer: JACEK KWASNIEWSKI
P.E. No.: 95757
Date: 4/25/2017

RELEASE FOR CONSTRUCTION

US 181 HARBOR BRIDGE

DRAINAGE PROFILES & LATERALS

SCALE: 1"=50' H
1"=10' V

FLATIRON/DRAGADOS LLC

Stantec
Engineered by Stantec Consulting Services Inc.
Texas Registered Engineering Firm F-6324

Texas Department of Transportation
© 2017

SHEET 4 OF 9

FED. RD. DIV. NO.	FEDERAL AID PROJECT NO.		SHEET NO.
6	HP X597(1)		DRN 026
STATE	STATE DIST. NO.	COUNTY	
TEXAS	CRP	NUECES	
CONT.	SECT	JOB	HIGHWAY NO.
0101	06	095	US181

PROJECT
US 181 HARBOR BRIDGE

Checked by: Date:
Back-Checked by: Date:
Corrected by: Date:
Verified by: Date:

REVIEW PHASE
☐ Detail Check ☐ Internal Review ☐ Design Review ☐ TxDOT
☐ Drawing ☐ Report ☐ Other:
Prepared By: Date:
☐ Drawing Checked Against Calculations ☐ Calculations Check Confirmed

Plotted: 4/25/2017 3:10:35 PM
Pen Table: HBR_Pack1B_DRN.tbl
Design File: pw:\\stantec-sc-pw.bentley.com:stantec-sc-pw\Documents\01 Projects\HBR\Build Work\Design\08-Drainage\08.01-Sheets\08.01A-North Package\ALTERNATE-B\HBR_DRN_LATERALS_LT04.dgn

SYSTEM CULV-OUT4 LATERALS (CONT.)

(PACKAGE 1B)

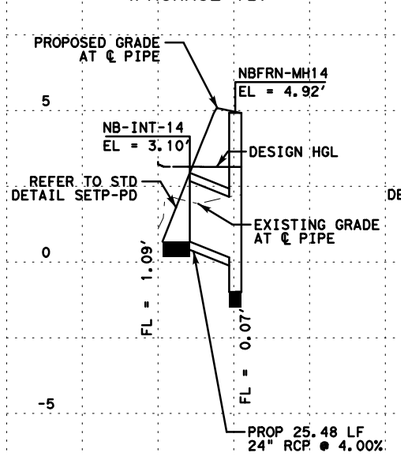

(PACKAGE 1B)

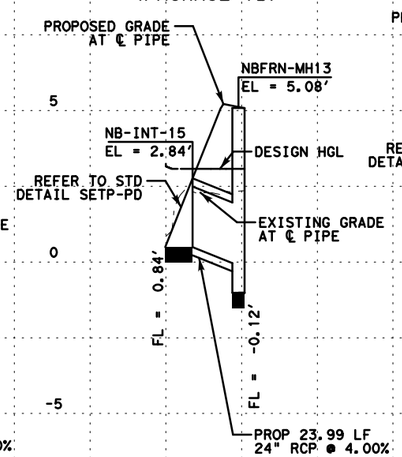

(PACKAGE 1B)

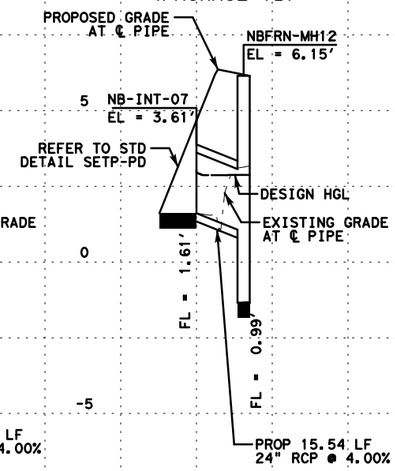

SYSTEM CULV-OUT3 LATERALS

(PACKAGE 1B)

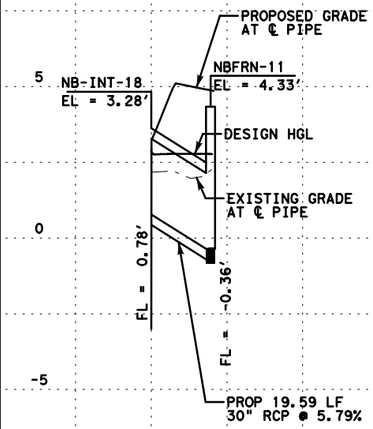

(PACKAGE 1A)

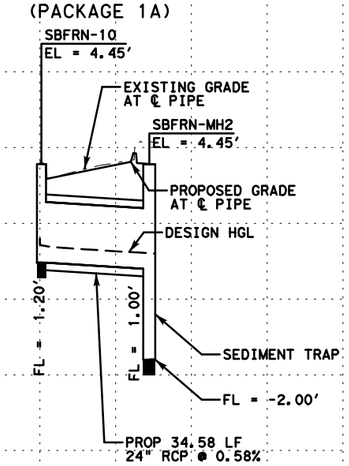

NOTES:
1. DESIGN HGL WAS CALCULATED USING THE RINCON CHANNEL AVERAGE TIDEWATER ELEVATION OF +1.0' AS TAILWATER.
2. THE 10-YR TAILWATER (COSTAL FLOODING ELEVATION) IS +5.10'.
3. REFER TO CORRESPONDING SUBMITTAL PACKAGE FOR PLAN SHEETS.

(PACKAGE 1A, 1B)

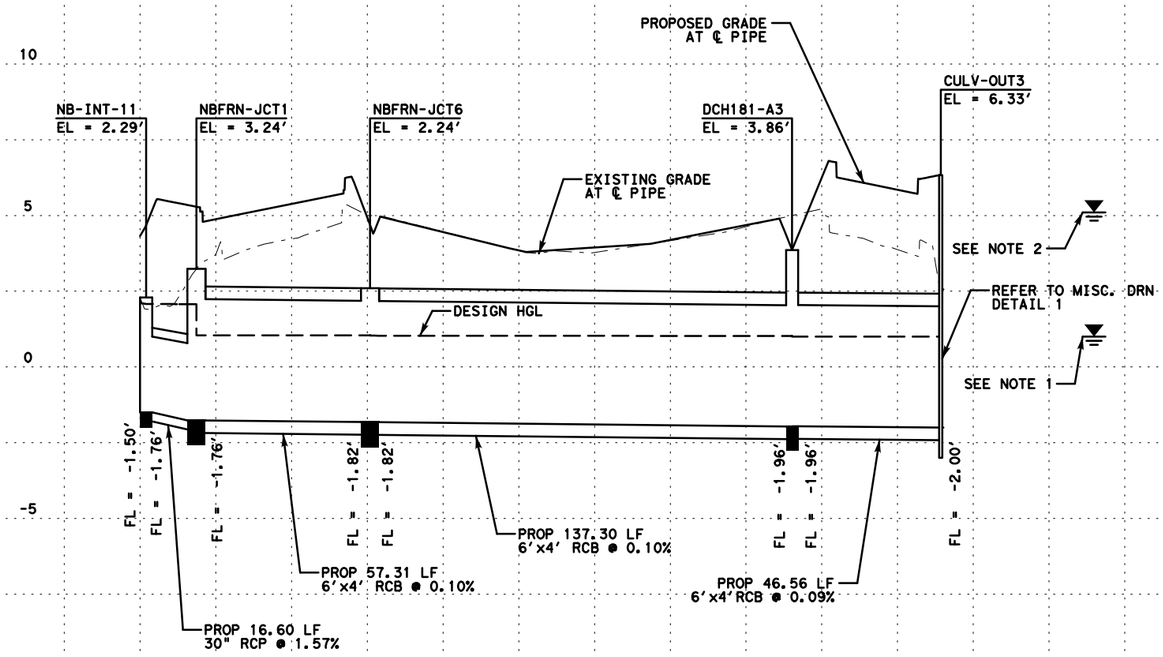

(PACKAGE 1B)

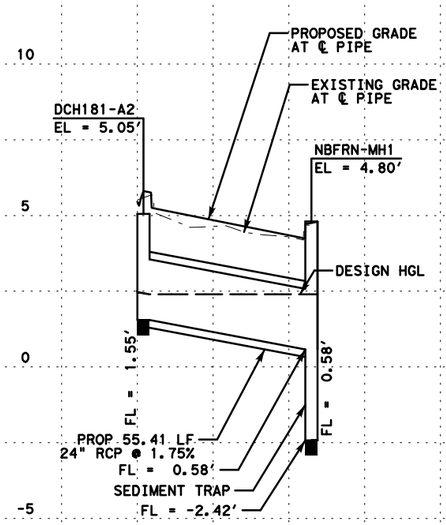

NO.	REVISIONS	BY	DATE

PRELIMINARY
FOR REVIEW ONLY
THESE DOCUMENTS ARE PRELIMINARY AND SUBJECT TO CHANGE. THEY ARE NOT INTENDED FOR CONSTRUCTION OR BIDDING. THEY WERE PREPARED BY, OR UNDER THE SUPERVISION OF:
Engineer: JACEK KWASNIEWSKI
P.E. No.: 95757
Date: 4/25/2017

RELEASE FOR CONSTRUCTION

US 181 HARBOR BRIDGE

DRAINAGE PROFILES & LATERALS

SCALE: 1"=50' H
1"=10' V

FLATIRON/DRAGADOS LLC

Stantec
Engineered by Stantec Consulting Services Inc.
Texas Registered Engineering Firm F-6324

Texas Department of Transportation
© 2017

SHEET 5 OF 9

FED. RD. DIV. NO.	FEDERAL AID PROJECT NO.		SHEET NO.
6	HP X597(1)		DRN 027
STATE	STATE DIST. NO.	COUNTY	
TEXAS	CRP	NUECES	
CONT.	SECT	JOB	HIGHWAY NO.
0101	06	095	US181

PROJECT: US 181 HARBOR BRIDGE

Checked by: Date:
Back-Checked by: Date:
Corrected by: Date:
Verified by: Date:

☐ Detail Check ☐ Internal Review ☐ Design Review ☐ TxDOT
☐ Drawing ☐ Report ☐ Other:
Prepared By: Date:
☐ Drawing Checked Against Calculations ☐ Calculations Check Confirmed
REVIEW PHASE

Plotted: 4/25/2017 3:10:40 PM
Pen Table: HBR_Pack1B_DRN.tbl
Design File: pw:\\stantec-sc-pw.bentley.com:stantec-sc-pw\Documents\01 Projects\HBR\Build Work\Design\08-Drainage\08.01-Sheets\08.01A-North Package\ALTERNATE-B\HBR_DRN_LATERALS_LT05.dgn

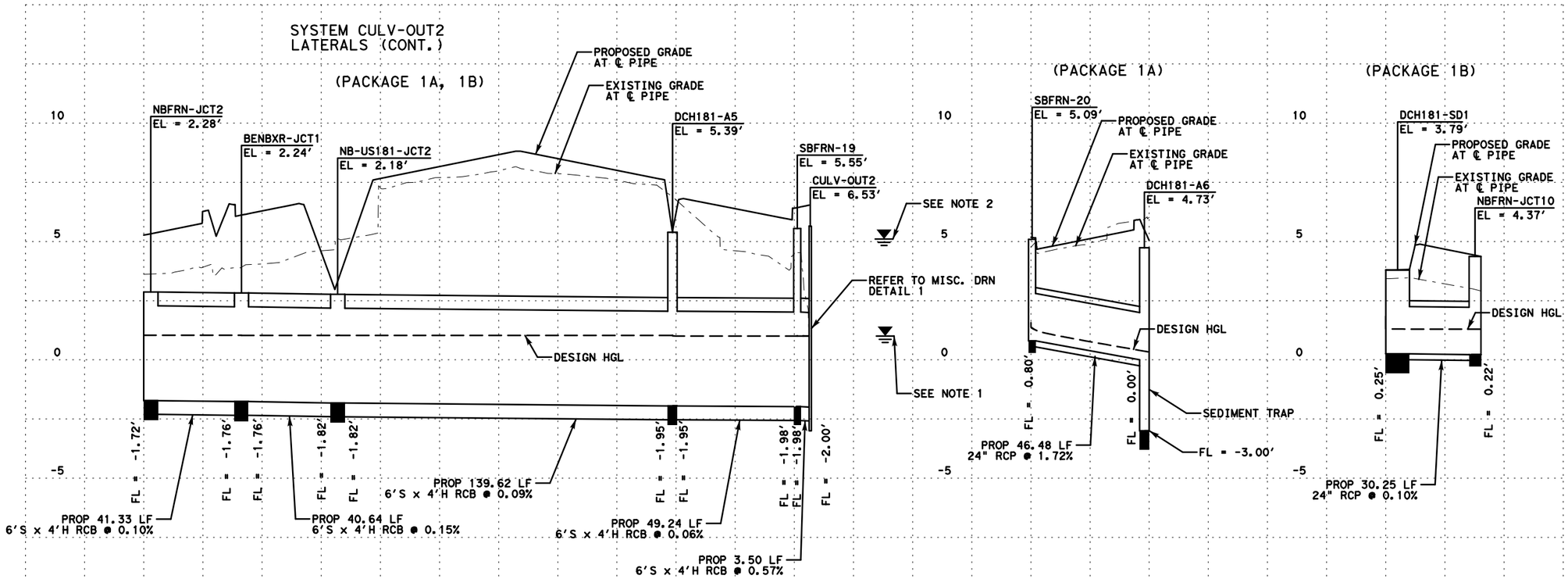

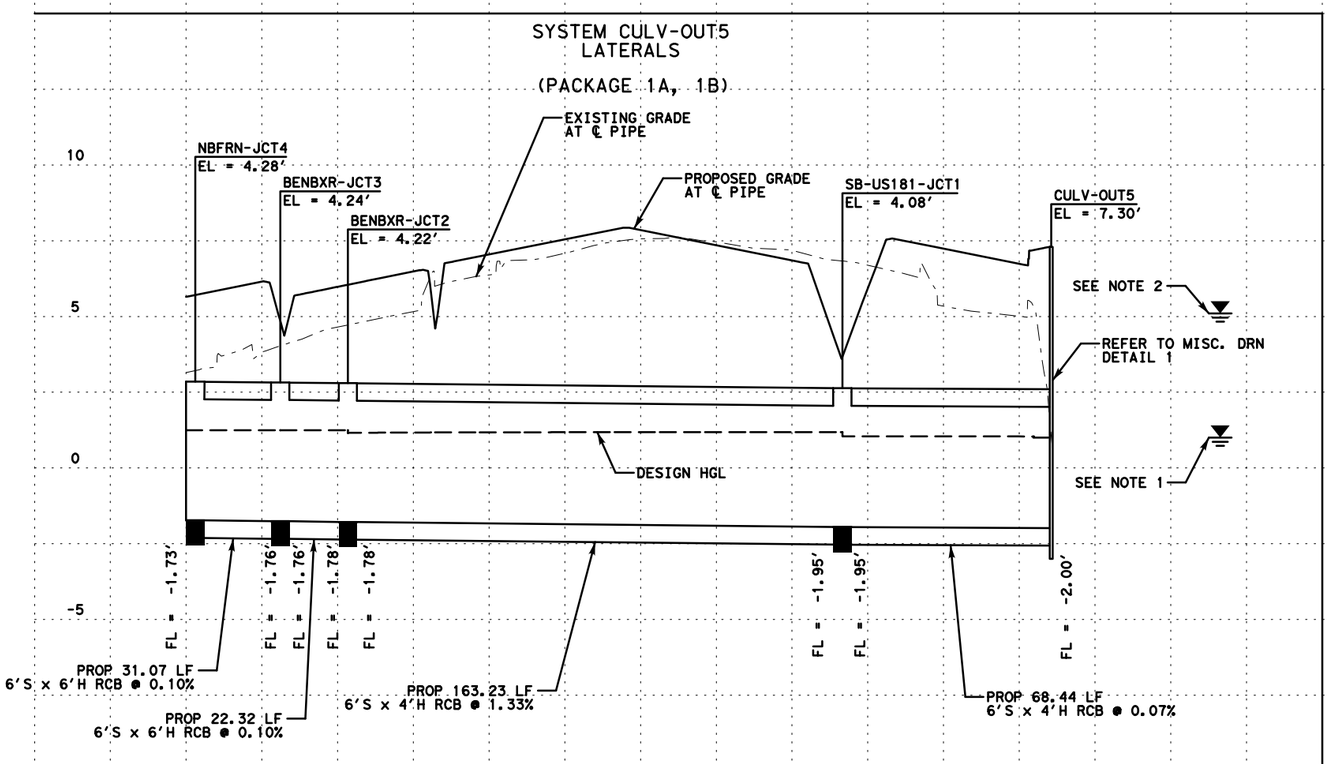

NOTES:
1. DESIGN HGL WAS CALCULATED USING THE RINCON CHANNEL AVERAGE TIDEWATER ELEVATION OF +1.0' AS TAILWATER.
2. THE 10-YR TAILWATER (COSTAL FLOODING ELEVATION) IS +5.10'.
3. REFER TO CORRESPONDING SUBMITTAL PACKAGE FOR PLAN SHEETS.

NO.	REVISIONS	BY	DATE

PRELIMINARY
FOR REVIEW ONLY
THESE DOCUMENTS ARE PRELIMINARY AND SUBJECT TO CHANGE. THEY ARE NOT INTENDED FOR CONSTRUCTION OR BIDDING. THEY WERE PREPARED BY, OR UNDER THE SUPERVISION OF:
Engineer: JACEK KWASNIEWSKI
P.E. No.: 95757
Date: 4/25/2017

RELEASE FOR CONSTRUCTION

US 181 HARBOR BRIDGE

DRAINAGE PROFILES & LATERALS

SCALE: 1"=50' H
1"=10' V

FLATIRON/DRAGADOS LLC

Stantec
Engineered by Stantec Consulting Services Inc.
Texas Registered Engineering Firm F-6324

Texas Department of Transportation
© 2017
SHEET 6 OF 9

FED. RD. DIV. NO.	FEDERAL AID PROJECT NO.		SHEET NO.
6	HP X597(1)		DRN 028
STATE	STATE DIST. NO.	COUNTY	
TEXAS	CRP	NUECES	
CONT.	SECT	JOB	HIGHWAY NO.
0101	06	095	US181

PROJECT
US 181 HARBOR BRIDGE

Checked by: Date:
Back-Checked by: Date:
Corrected by: Date:
Verified by: Date:

REVIEW PHASE
☐ Detail Check ☐ Internal Review ☐ Design Review ☐ TxDOT
☐ Drawing ☐ Report ☐ Other:
Prepared By: Date:
☐ Drawing Checked Against Calculations ☐ Calculations Check Confirmed

Plotted: 4/25/2017 3:10:44 PM
Pen Table: HBR_Pack1B_DRN.tbl
Design File: pw:\\stantec-sc-pw.bentley.com:stantec-sc-pw\Documents\01 Projects\HBR\Build Work\Design\08-Drainage\08.01-Sheets\08.01A-North Package\ALTERNATE-B\HBR_DRN_LATERALS_LT06.dgn

SYSTEM CULV-OUT5 LATERALS (CONT.)

(PACKAGE 1A)

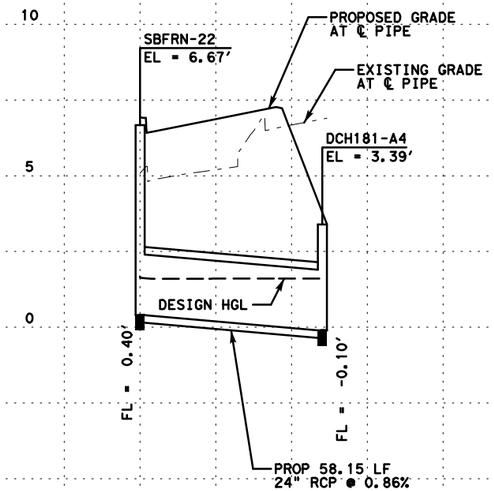

(PACKAGE 1A)

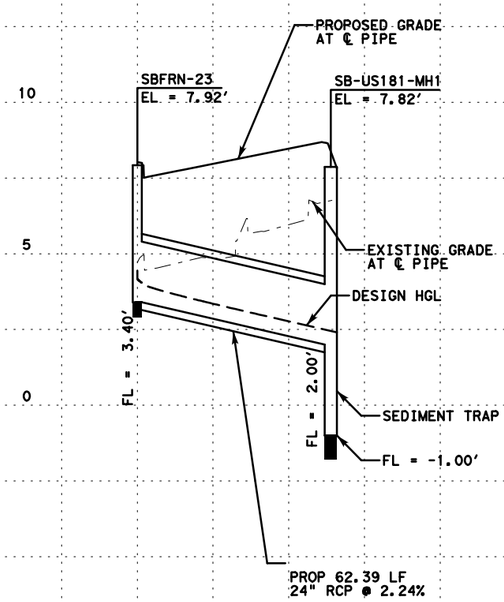

SYSTEM POND OUTLET LATERALS

(PACKAGE 1A)

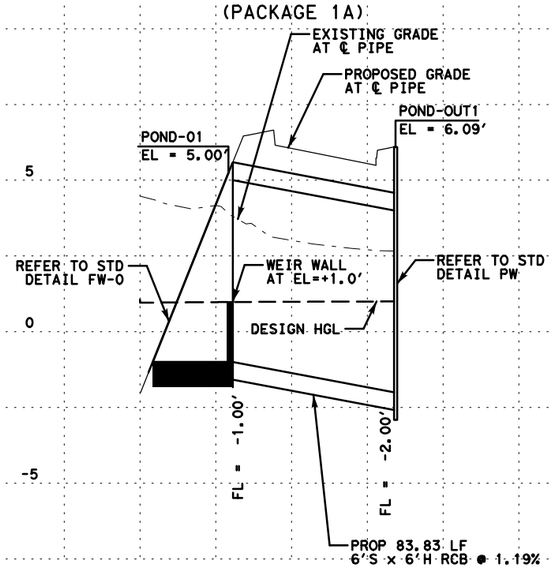

(PACKAGE 1A)

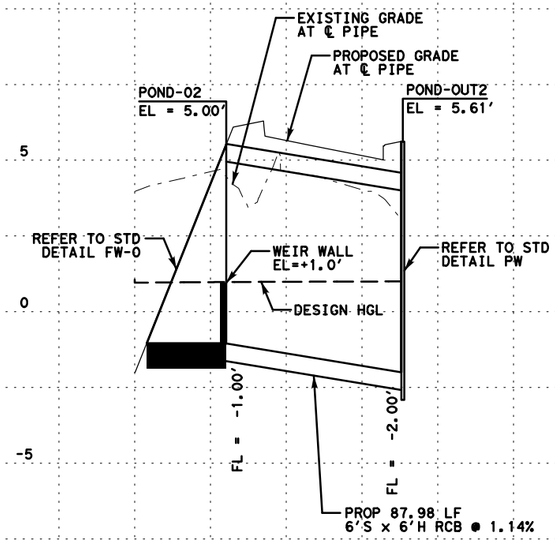

(PACKAGE 1A)

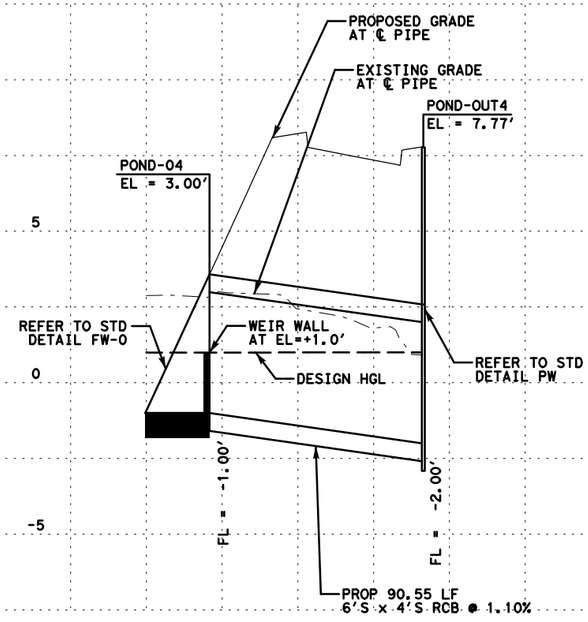

NOTES:
1. DESIGN HGL WAS CALCULATED USING THE RINCON CHANNEL AVERAGE TIDEWATER ELEVATION OF +1.0' AS TAILWATER.
2. THE 10-YR TAILWATER (COSTAL FLOODING ELEVATION) IS +5.10'.
3. REFER TO CORRESPONDING SUBMITTAL PACKAGE FOR PLAN SHEETS.

NO.	REVISIONS	BY	DATE

PRELIMINARY
FOR REVIEW ONLY
THESE DOCUMENTS ARE PRELIMINARY AND SUBJECT TO CHANGE. THEY ARE NOT INTENDED FOR CONSTRUCTION OR BIDDING. THEY WERE PREPARED BY, OR UNDER THE SUPERVISION OF:
Engineer: JACEK KWASNIEWSKI
P.E. No.: 95757
Date: 4/25/2017

RELEASE FOR CONSTRUCTION

US 181 HARBOR BRIDGE

DRAINAGE PROFILES & LATERALS

SCALE: 1"=50' H
1"=10' V

FLATIRON/DRAGADOS LLC

Stantec
Engineered by Stantec Consulting Services Inc.
Texas Registered Engineering Firm F-6324

Texas Department of Transportation
© 2017

SHEET 7 OF 9

FED. RD. DIV. NO.	FEDERAL AID PROJECT NO.		SHEET NO.
6	HP X597(1)		DRN 029
STATE	STATE DIST. NO.	COUNTY	
TEXAS	CRP	NUECES	
CONT.	SECT	JOB	HIGHWAY NO.
0101	06	095	US181

PROJECT: US 181 HARBOR BRIDGE

REVIEW PHASE: ☐ Detail Check ☐ Internal Review ☐ Design Review ☐ TxDOT ☐ Drawing ☐ Report ☐ Other:

Prepared By: Date: ☐ Drawing Checked Against Calculations ☐ Calculations Check Confirmed

Checked by: Date: Back-Checked by: Date: Corrected by: Date: Verified by: Date:

Design File: pw:\\stantec-sc-pw.bentley.com:stantec-sc-pw\Documents\01 Projects\HBR\Build Work\Design\08-Drainage\08.01-Sheets\08.01A-North Package\ALTERNATE-B\HBR_DRN_LATERALS_LT07.dgn

Plotted: 4/25/2017 3:10:48 PM
Pen Table: HBR_Pack1B_DRN.tbl

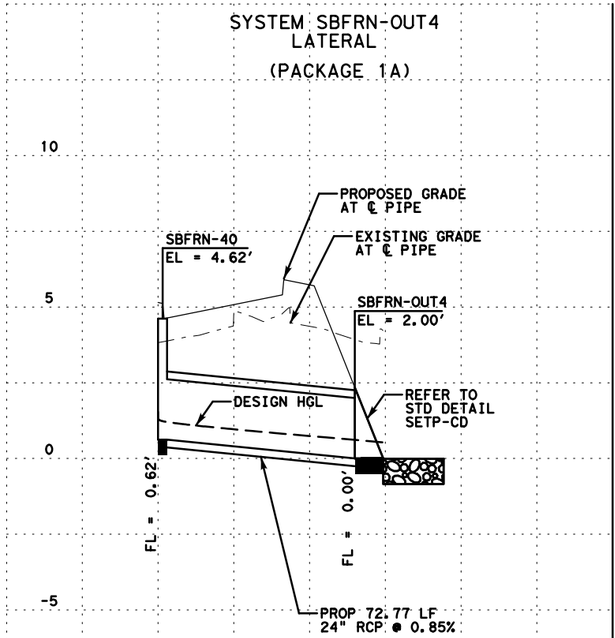

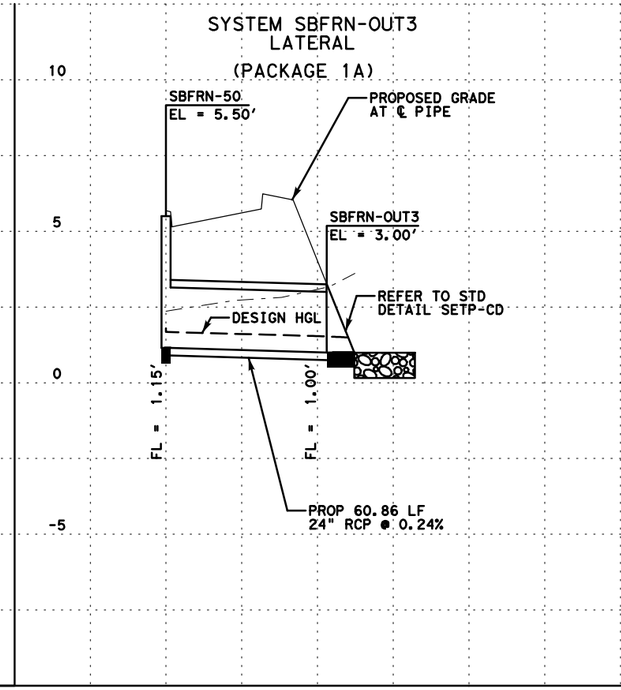

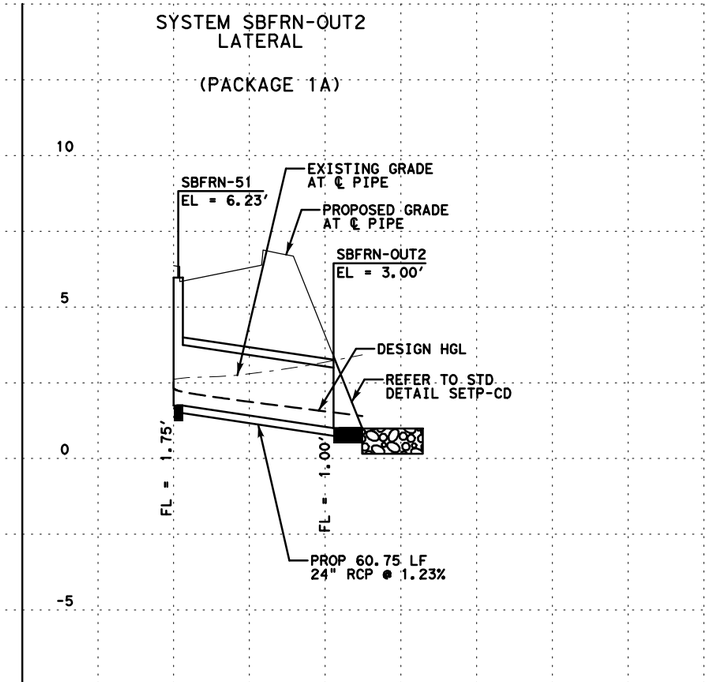

NOTES:
1. DESIGN HGL WAS CALCULATED USING THE RINCON CHANNEL AVERAGE TIDEWATER ELEVATION OF +1.0' AS TAILWATER.
2. THE 10-YR TAILWATER (COSTAL FLOODING ELEVATION) IS +5.10'.
3. REFER TO CORRESPONDING SUBMITTAL PACKAGE FOR PLAN SHEETS.

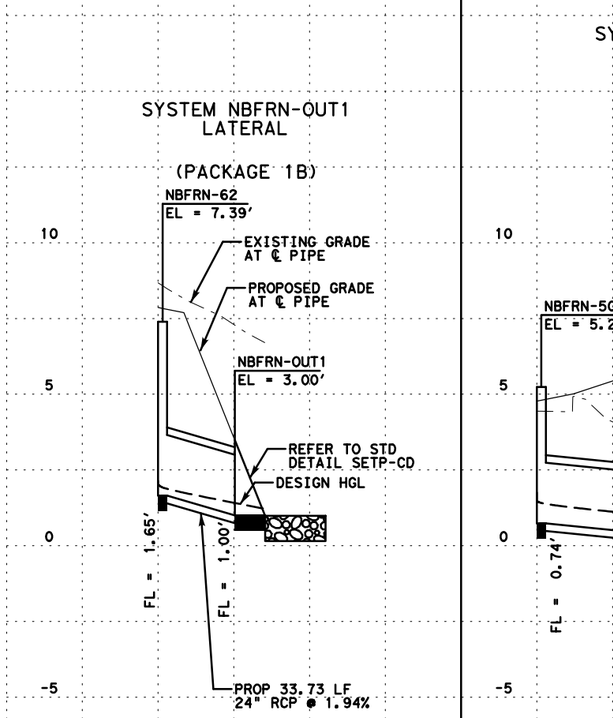

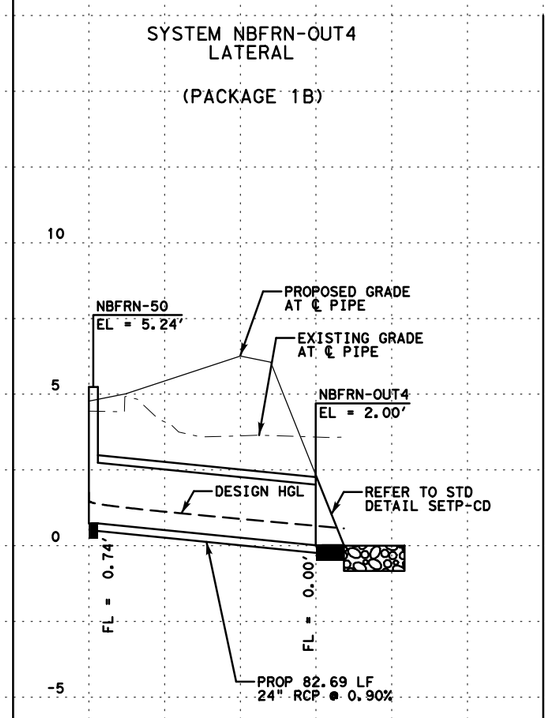

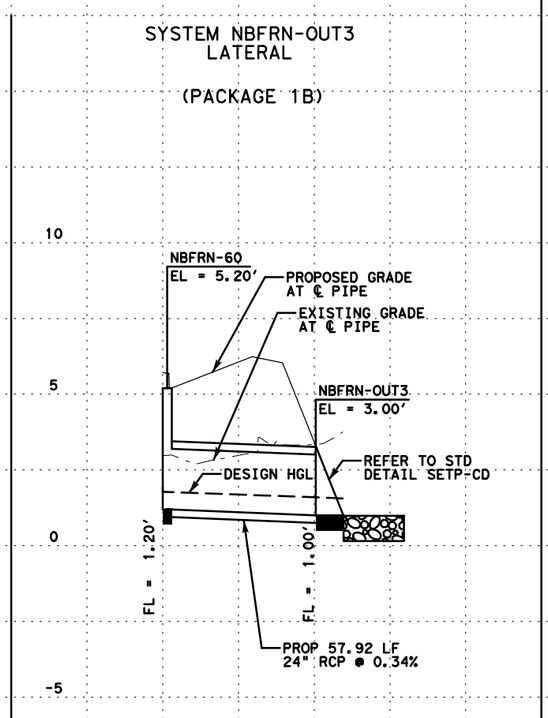

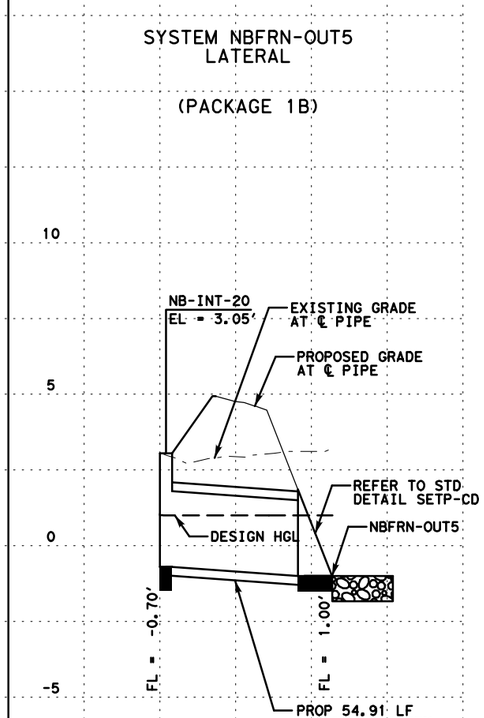

NO.	REVISIONS	BY	DATE

PRELIMINARY
FOR REVIEW ONLY
THESE DOCUMENTS ARE PRELIMINARY AND SUBJECT TO CHANGE. THEY ARE NOT INTENDED FOR CONSTRUCTION OR BIDDING. THEY WERE PREPARED BY, OR UNDER THE SUPERVISION OF:
Engineer: JACEK KWASNIEWSKI
P.E. No.: 95757
Date: 4/25/2017

RELEASE FOR CONSTRUCTION

US 181 HARBOR BRIDGE

DRAINAGE PROFILES & LATERALS

SCALE: 1"=50' H
1"=10' V

FLATIRON/DRAGADOS LLC

Stantec
Engineered by Stantec Consulting Services Inc.
Texas Registered Engineering Firm F-6324

Texas Department of Transportation
© 2017

SHEET 8 OF 9

FED. RD. DIV. NO.	FEDERAL AID PROJECT NO.		SHEET NO.
6	HP X597(1)		DRN 030
STATE	STATE DIST. NO.	COUNTY	
TEXAS	CRP	NUECES	
CONT.	SECT	JOB	HIGHWAY NO.
0101	06	095	US181

PROJECT
US 181 HARBOR BRIDGE

Checked by: Date:
Back-Checked by: Date:
Corrected by: Date:
Verified by: Date:

REVIEW PHASE
☐ Detail Check ☐ Internal Review ☐ Design Review ☐ TxDOT
☐ Drawing ☐ Report ☐ Other:
Prepared By: Date:
☐ Drawing Checked Against Calculations ☐ Calculations Check Confirmed

Plotted: 4/25/2017 3:10:52 PM
Pen Table: HBR_Packl1B_DRN.tbl
Design File: pw:\\stantec-sc-pw.bentley.com:stantec-sc-pw\Documents\01 Projects\HBR\Build Work\Design\08-Drainage\08.01-Sheets\08.01A-North Package\ALTERNATE-B\HBR_DRN_LATERALS_LT08.dgn

SYSTEM BURL-OUT1 LATERALS

(PACKAGE 1B)

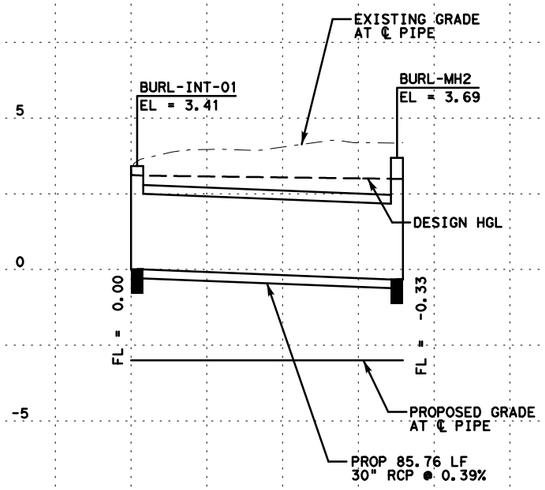

(PACKAGE 1B)

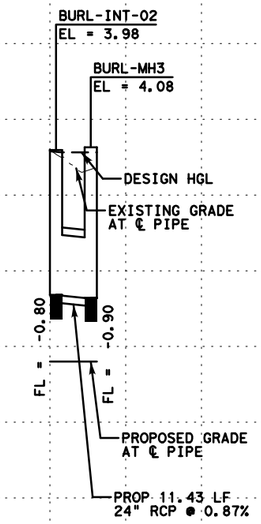

(PACKAGE 1B)

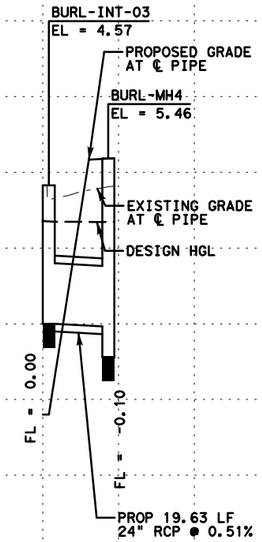

(PACKAGE 1B)

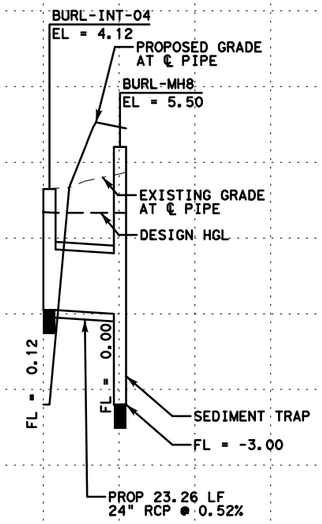

NOTES:
1. DESIGN HGL WAS CALCULATED USING THE RINCON CHANNEL AVERAGE TIDEWATER ELEVATION OF +1.0' AS TAILWATER.
2. THE 10-YR TAILWATER (COSTAL FLOODING ELEVATION) IS +5.10'
3. REFER TO CORRESPONDING SUBMITTAL PACKAGE FOR PLAN SHEETS.

SYSTEM BURL-OUT2 LATERAL

(PACKAGE 1B)

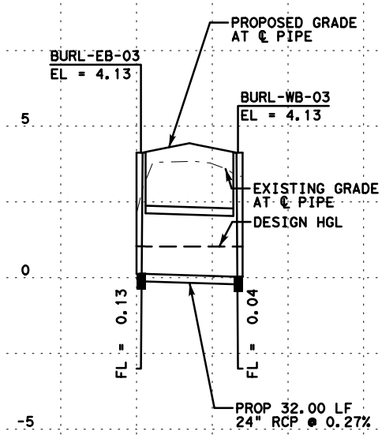

NO.	REVISIONS	BY	DATE

PRELIMINARY
FOR REVIEW ONLY
THESE DOCUMENTS ARE PRELIMINARY AND SUBJECT TO CHANGE. THEY ARE NOT INTENDED FOR CONSTRUCTION OR BIDDING. THEY WERE PREPARED BY, OR UNDER THE SUPERVISION OF:
Engineer: JACEK KWASNIEWSKI
P.E. No.: 95757
Date: 4/25/2017

PREFINAL SUBMITTAL

NOT FOR CONSTRUCTION

US 181 HARBOR BRIDGE

DRAINAGE PROFILES & LATERALS

SCALE: 1"=50' H
1"=10' V

FLATIRON/DRAGADOS LLC

Stantec
Engineered by Stantec Consulting Services Inc.
Texas Registered Engineering Firm F-6324

Texas Department of Transportation
© 2017

SHEET 9 OF 9

FED. RD. DIV. NO.	FEDERAL AID PROJECT NO.		SHEET NO.
6	HP X597(1)		DRN 031
STATE	STATE DIST. NO.	COUNTY	
TEXAS	CRP	NUECES	
CONT.	SECT	JOB	HIGHWAY NO.
0101	06	095	US181

PROJECT
US 181 HARBOR BRIDGE

Checked by: Date:
Back-Checked by: Date:
Corrected by: Date:
Verified by: Date:

REVIEW PHASE
☐ Detail Check ☐ Internal Review ☐ Design Review ☐ TxDOT
☐ Drawing ☐ Report ☐ Other:
Prepared By: Date:
☐ Drawing Checked Against Calculations ☐ Calculations Check Confirmed

stantec-sc-pw\Documents\01 Projects\HBR\Build Work\Design\08-Drainage\08.01-Sheets\08.01A-North Package\ALTERNATE-B\HBR_DRN_LATERALS_LT09.dgn

Plotted: 4/25/2017 3:10:57 PM
Pen Table: HBR_Pack1B_DRN.tbl
Design File: pw:\\stantec-sc-pw.bentley.com:stantec-sc-pw\Documents\01 Projects\HBR\Build Work\Design\08-Drainage\08.01-Sheets\08.01A-North Package\ALTERNATE-B\HBR_DRN_LATERALS_LT09.dgn